# SPECPACK Edition 27

**June 2014**

**Prepared by SpecPack Pty Ltd**
**PO Box 2002, Oakleigh 3166**

**www.specpack.com.au**

## PART ONE - COMPLIANCE WITH QUALITY STANDARDS

Comply with the following Australian Standards:
AS/NZS ISO 9001 2008 Quality management systems – Requirements.

Provide, implement and maintain a quality assurance system to:
AS/NZS ISO 9001 2008

This system includes at a minimum the following elements:
Submission at time of tender of a copy of the firm's general quality management system including quality manual, technical procedures, sample forms used in the quality management system and quality checklists if used. If the firm has had a third party certification audit prepared by a registered lead assessor within the last 2 years, a copy of such audit will be accepted in lieu of the required submission.

A. Submission within 15 (or 30) days of award of contract, a project-specific quality plan to AS/NZS ISO 9001, which describes specific quality management procedures for all sub-contracts where the sub-contract amount is 5 percent or more of the contract sum. This project quality plan describes in detail the quality reporting and quality records procedures to be implemented on the project.
B. Submission within 15 (or 30) days of award of contract, a project-specific plan prepared by each sub-contractor whose sub-contract work includes a design component and where the trade section specification requires quality assurance to AS/NZS ISO 9001 2008.

## PART TWO - TRADE SECTION REFERENCES

**103 Quality Assurance**

Provide, implement and maintain a quality assurance system to AS/NZS ISO 9001. This system includes at a minimum the following elements:
Submission at time of tender of a copy of the firm's general quality management system including quality manual, technical procedures, sample forms used in the quality management system and quality checklists if used. If the firm has had a third party certification audit prepared by a registered lead assessor within the last 2 years, a copy of such audit will be accepted in lieu of the required submission.
Submission within 15 days of award of contract, a project-specific quality plan.

**103 Quality Assurance**

Submit evidence of the firm's quality assurance system.

**END OF SECTION**

## PART I GENERAL

### 101 General

Comply with Statutory requirements for demolisher, supervisors, workers and demolition works.
Demolish all sections of the built environment as shown in the specification and described as follows:

A. Scope
The work of this section includes but is not limited to the following items:
Manage all demolition works including:
Identification of existing services including type of service, depth of service and location of service, co-ordinate required termination, alteration or protection of services as per service provider requirements, detail same on a site plan and provide a copy to the project manager and other trades or activities undertaking work at the project.

B. Examine documents: examine parts of the drawings and this specification for requirements which affect the work of this section. In particular, take note of related work.

C. Ensure only competent and approved persons, working under compliant business licence for the class of demolition, are employed and perform in accordance with statutory requirements.

D. Provide copies of all relevant documents, e.g. Asbestos clearance certificate, Dilapidation report, burial of waste and other certifications, in accordance with requirements by statutory bodies having jurisdiction.

E. Cleaning the site thoroughly on completion.

### 102 Related Work

Co-ordinate with other trades affecting or affected by work of this section, co-operating as necessary to ensure steady and satisfactory progress of the work.
Disconnection of existing services by appropriate other trades

| | |
|---|---|
| Site preparation – Excavation | Asbestos removal |
| Water distribution | Sanitary sewerage |
| Storm drainage | |

### 103 Quality Assurance

Relevant business licence for demolition work.
Provide data indicating a minimum of 3 years of experience in such work as required by this specification.
Supply names of contacts, with telephone numbers, who can verify performance quality.

### 104 References

Comply with applicable portions of the following Australian Standards:

| | |
|---|---|
| AS 2187 | Explosives - Storage, transport and use. |
| | 2187.2 2006 Use of explosives. *There are 4 other parts, 1998 – 2006.* |
| AS 2436 2010 | Guide to noise and vibration control on construction, demolition and maintenance sites. |
| AS 2550.1 2011 | Cranes, hoists and winches – Safe use - General requirements |
| AS 2601 2001 | Demolition of structures. |
| AS 4687 2007 | Temporary fencing and hoardings. |
| AS 4970 2009 | Protection of trees on development sites. |

Comply also with the requirements of applicable building regulations, environmental requirements, statutory and local authority having jurisdiction, including local council.

### 105 Public and Property Protection

Obtain heritage, local or environmental approval to demolish where applicable.
Provide measures required by municipal and state ordinances, laws and regulations for the protection of surrounding property, footpaths, streets, kerbs, the public, occupants and workmen during demolition operations. Comply with the above ordinances, laws etc. in carrying out measures including hoardings, barricades, fences, warning lights and signs, rubbish chutes, etc.
No blasting for demolition purposes will be permitted.
Exercise due care in executing this work.
Make good to original condition, damage to structures to be retained and to adjacent property which results from demolition operations.
Perform restoration work without expense to the proprietor.

### 106 Fees

Pay all fees due to statutory, local or other relevant authority requiring same in connection with the work of this section.

### 107 Services

Before demolishing and removing parts of building having essential services installed, i.e. electrical or other wiring, gas and water pipes, tanks, conduits or similar items embedded in them, notify the project manager,

owners of services, authorities having jurisdiction, and make sure that these items are out of service so that they can be removed without danger.

**108 Photographic Record**

Provide a professional quality photographic record of the progress of demolition in accordance with the proprietor's requirements, showing "before and after" demolition of typical work involved in demolition.

**109 Tree Preservation**

Where applicable, clearly mark and protect all trees and vegetation identified on the site plan during demolition.

**110 Pest Management**

Where applicable, produce Pest Management Plan, e.g. fire ants in Queensland. Refer SECTION 10290 PEST CONTROL.
2050

## PART II MATERIALS

**201 Demolished Materials**

Material required to be demolished becomes the property of the contractor. Remove it from the site. Exceptions to this clause are as follows:

**202 Equipment**

A. Supply equipment required to perform the work of sufficient capacity to meet the time schedule.
B. Provide suitable, approved, if relevant, disposal containers that prevent a spill to the environment for disposal required.
C. No containers may be located on public streets or pavements without obtaining required municipal permits for same. Co-operate with sub-contractors doing work in or near container locations to prevent disruption of their work.

## PART III EXECUTION

**301 Examine The Site Conditions**

Examine carefully the following site conditions:

Start of work means total acceptance of conditions.

**302 Existing Reinforced Concrete**

Neatly cut back or trim to new alignment with a clean true face on material to be retained. Cut with diamond saw where necessary.

**303 Shoring**

Provide necessary shoring in accordance with structural engineering instructions.
Alter, adapt, and maintain temporary works as necessary, and strike or withdraw them progressively as the work proceeds. Obtain the written consent of the project manager/structural engineer if such works are to be left in position at the completion of the work.

**304 Exposed Excavations**

Leave excavations open and protected as required by the statutory authority after removal of work below ground level until completion of inspection by project manager/structural engineer.

**305 Methods and Operations**

A. Ensure, where applicable, a copy of asbestos clearance certificate is received and maintained with the demolition plan at the site.
B. Demolish and remove completely parts of structure listed and/or drawn for demolition. The methods of cutting and removal of floors, walls, and other items to be removed are to be approved by authorities having jurisdiction, or certified practising engineer.
C. Furnish flame-cutting required to dismantle sections of equipment too large to be otherwise removed. Flame-cutting is to be performed only by experienced and qualified mechanics. Protect combustible surfaces during flame cutting. Maintain fire extinguishers, required by the fire authority, at hand.
D. Do not drop or throw material, other than as detailed in Safe Work Method Statement.. Lower by means of hoists, cranes or rubbish chutes etc. Wet down thoroughly during demolition to prevent nuisance of dirt and dust. Equip trucks used in hauling debris with tarpaulins to cover the loads. Do not load so excessively as to spill debris on streets.
E. Plaster removal: in general, removal of existing plaster showing cracks, bulges or drumminess is required. Refer to project manager if in doubt.
F. Except as placed in approved disposal containers, do not allow combustible material and rubbish to accumulate on the site. Remove daily, or as directed. Burn no debris on site.
G. Upon completion of wrecking, demolition and the removal of rubbish and debris, remove equipment.

**306 Reinstatement**

Restore to original condition, without expense to the proprietor, any damaged parts of the remaining construction resulting from failure to provide adequate protection. Refer also clause 105.

**307 Disposal of Waste**

Dispose of asbestos and other hazardous waste as per statutory or local requirements.

**308 Completion**

Complete contracted work in accordance with contract documents and written variation orders issued by the project manager.
Leave the site in an entirely clean condition, ready for the work of other trades.

**END OF SECTION**

**ADVICE TO OWNER AND PROJECT MANAGER REGARDING ASBESTOS REMOVAL**
The building owner is responsible for the provision of an asbestos report on the building or structure to be demolished, supplied by a licenced person approved by the relevant statutory body.. It is a responsibility of the owner to engage a specialist consultant to identify asbestos material, hazardous or toxic substances on the site or adjacent areas and to comply with applicable laws and regulations. Building work on such sites may only proceed after the project manager has received a written document from the relevant authority which states that asbestos and hazardous materials have been totally removed.

If any such material is discovered on the site after work has started the work will be ceased immediately and licensed persons engaged to remove asbestos-containing material, certify its removal and re-issue an asbestos clearance certificate. . The project manager will require the client to indemnify the project manager in writing against any claim relating to liability or loss relating to the detection, abatement, removal and disposal of asbestos, hazardous and toxic substances.

## PART I GENERAL

### 101 Scope
The work of this section includes but is not limited to:
Identification, removal and safe disposal of asbestos containing materials (ACM). Refer to drawings supplied as part of the contract documents. Nominate material to be removed. Examine relevant documents for requirements which will affect the work of this trade section.

### 102 Related Work
A. Allow only licensed asbestos removal service provider to undertake the works in compliance with their business licence and ensure competent supervisors and workers are engaged and supervised at all times during the works.
B. Co-ordination: co-ordinate with other trades affecting or affected by the work of this trade section. Co-operate as necessary to ensure steady and satisfactory progress of the work.
C. Unit prices: submit with tender a schedule of rates for work required to be done not identified at time of tender. The schedule of rates is required to reflect costs on a square metre rate for sheets or panels to be removed and on a metre run basis for other work. Such costs are to cover work referred to in clause 101 above.

### 103 Quality Assurance
A. Submit evidence, before starting work, of the registration, training and experience of those who will be performing the required work.
B. Comply with relevant Act, Regulation, CODE OF PRACTICE, Australian Standard or other recognised document relating to asbestos removal work.
Supply names of contacts, with telephone numbers, who can verify performance quality.

### 104 References
Perform asbestos removal in accordance with:
A. National Code of Practice for the Safe removal of Asbestos 2nd Edition [NOHSC: 2002 (2005)]. Copies of this code can be downloaded from Safe Work Australia, www.safeworkaustralia.gov.au
B. Relevant state government department or state statutory authority, which has jurisdiction over the work of this section, and which is in force at the time of tendering.

### 105 Submissions
A. Submit as and when required all of the reports and submissions required by the statutory authorities referred to in clause 104 above.
B. Submit the data required in CODE OF PRACTICE.
C. Submit tenders conforming with documents referred to in clause 104.

### 106 Planning and Programming
A. Comply with relevant Act, Regulation, CODE OF PRACTICE, Australian Standard, ministerial notice or alert issued by a statutory body.
B. Submit a project specific Asbestos removal plan for the works in accordance with state or local requirements.
C. Arrange for and attend a pre-asbestos-removal demolition conference. Abide by decisions and schedules established at such conference.

### 107 Project Site Control
### 108 Notices and Fees
Provide notices to statutory and local authority which needs data relating to asbestos removal. Pay fees due to any statutory and local authority which requires, by law, fees to be paid.

## PART II EQUIPMENT

**201 Decontamination Facilities**
Where required by regulations of the controlling statutory or local authority, provide appropriate decontamination facilities as described in CODE OF PRACTICE.

**202 General Hygiene Requirements**
Where required by regulation of the controlling statutory or local authority, comply with general hygiene requirements as described in the CODE OF PRACTICE.

**203 Protective Clothing and Equipment**
Where required by regulations of the controlling statutory or local authority, comply with protective clothing and equipment, CODE OF PRACTICE.
NOTE : the use of glove-bags is described and should be used where necessary in accordance with CODE OF PRACTICE.

**204 Labelling and Warning Signs**
Provide necessary labels and warning signs in accordance with the requirements of "GUIDE TO THE CONTROL OF ASBESTOS HAZARDS IN BUILDINGS AND STRUCTURES." Refer to CODE OF PRACTICE.

**205 Tools and Equipment**
Provide tools and equipment necessary for the work, including cleaning of same after use. Refer to CODE OF PRACTICE.

## PART III EXECUTION

**301 Examination**

A. Inspect relevant site conditions.
Establish conditions which may be discovered relevant to asbestos removal without disturbing material containing asbestos.

B. Start of work means total acceptance of conditions.

**302 Preparation**

A. Prepare for asbestos removal in full accordance with the requirements of CODE OF PRACTICE, including establishment of the asbestos removal area and ensure it is secured from access by unauthorised persons..

B. Install decontamination facilities in a location agreed upon with the project manager and other relevant parties.

C. Install required labelling and warning signs. Refer clause 204 above.

D. Remove from the work area items which may be damaged by the work of this trade section.

E. Protect item of furniture, surface, equipment or plant which may be damaged or soiled during the preparation for and action of asbestos removal. Clean and wipe down all furniture, surfaces, equipment and plant prior to removing from the asbestos removal area and provide records of monitoring conducted in these areas to ensure area is maintained clean of asbestos containing material. Be responsible for damage resulting from asbestos removal actions, processes and other works.

**303 Asbestos Removal**

A. Advise the project manager or superintendent in advance of proposed removal methods in a document titled Asbestos Removal Plan and relevant Safe Work Method Statement..

B. Comply with the requirements of CODE OF PRACTICE and with the instructions of the authorised superintendent of the work.

C. Document removal techniques.
Comply with CODE OF PRACTICE and obtain Burial certificates for asbestos containing material removed where applicable.

**304 Monitoring of Airborne Asbestos**
Ensure an approved and independent testing organisation is engaged to monitor and report on the existence of airborne asbestos, maintain and display records at the site and supply copies to the project manager as soon as reasonably practicable and comply with any Act. Regulation, CODE OF PRACTICE, Australian Standard. Ministerial Notice or statutory issued alert.

**305 Field Quality Control**
Work will be performed under the supervision of an authorised superintendent. Comply with his requirements which are in accordance with any Act, regulation, CODE OF PRACTICE, Australian Standard, Ministerial Notice or statutory issued alert, and other requirements to which parties have agreed.

**306 Dismantling of Asbestos Removal Area**
Comply with CODE OF PRACTICE.

**307 Removal of Asbestos Material From Site**

Arrange with relevant local authorities the identification of the place to which asbestos material is to be taken from the demolition site and the means of transport of same. Comply with requirements of the authorities. Remove such materials to the approved location.

**308 Reinstallation**

**309 Cleaning**

Thoroughly wet and wipe clean areas in which work has been performed and those adjacent to the work area. Remove and dispose of traces of the asbestos removal process, protective materials, etc. and continue monitoring until advised by the testing authority that it is safe to discontinue testing.

**310 Completion**

Complete contracted work in accordance with contract documents and written variation orders issued by the project manager, and/or authorised superintendent of the works. Leave the site in a condition suitable for the work of other trades, in co-operation with project manager and builder or contractor.

**END OF SECTION**

## PART I GENERAL

### 101 Scope

The work of this section comprises but is not limited to excavation, disposal of surplus excavated material both on and off the site, supply of compaction and filling material and the preparation necessary to bring the areas to correct shape and level prior to building construction, and as follows:
Establishing environmental controls
Protect all trees and vegetation identified for preservation on the site plan.
Site clearing
Termite treatment
Supply and installation of waterproofing membrane.
Other:

### 102 Related Work

Co-ordinate and co-operate with the following trades:

Allow the following sums per cubic metre for rock excavation and removal:
Refer DOCUMENT 00870, PART I MONETARY SCHEDULES.

### 103 Quality Assurance

Provide data indicating that the tradesmen engaged for this project have the necessary education, training and instruction and a minimum of 3 years' experience in such work required by this specification.
Supply names of contacts, with telephone numbers, who can verify performance quality.

### 104 References

A. Comply with applicable portions of the following Australian Standards:

| | | |
|---|---|---|
| AS 1289 | Methods of testing soils for engineering purposes. | |
| | *There are many parts, 1997 - 2009; each refers to a specific application.* | |
| AS 2159 2009 | Piling - Design and installation. *Plus 1 Amdt, 2010.* | |
| AS 2187 | Explosives - Storage, transport and use. | |
| | 2187.2 2006 | Use of explosives. |
| | *There are 4 other parts, 1998 – 2006.* | |
| AS 3660 | Termite management. | |
| | 3660.1 2000 | New building work. |
| | *There are 2 other parts, 2000.* | |
| AS 3798 2007 | Guidelines on earthworks for commercial and residential developments. *Plus 1 Amdt, 2008.* | |
| AS/NZS 4200 | Pliable building membranes and underlays. | |
| | 4200.1 1994 | Materials. *Plus 1 Amdt, 1994.* |
| | 4200.2 1994 | Installation requirements. |
| AS 4687 2007 | Temporary fencing and hoardings. | |
| AS 4970 2009 | Protection of trees on development sites | |

Comply with particular specifications in building regulations and/or local council publications.

B. Definitions
Rock: natural or artificial material encountered in the excavation which cannot be removed until broken up by mechanical means such as rippers, jack-hammers or percussion drills.
Rippable rock: rock which can be removed by a single tine, "D9" ripper.
Non-Rippable rock: all other rock.
Other than rock: other material encountered in excavation.
Sub-grade: the natural ground below the excavations.
Filling: a general term for material spread and compacted over the sub-grade to make up finished levels or levels to the under-side of the base.
Sub-base: selected filling spread and compacted over the sub-grade to make up levels to the underside of the base.
Base: a selected filling layer spread and compacted to form an acceptable working surface directly under the building.

### 105 Approval from Relevant Authorities

Pest Management i.e. Fire Ant Queensland, Refer SECTION 10290 PEST CONTROL.
Heritage, local authority or environmental conditions of approval.

Essential services information (dial before you dig)
Environmental requirements, i.e. stockpiles, retaining trees etc.

### 106 Approval for Variations

Before starting excavation work which may involve a variation (whether addition or deduction) because of the nature of the material to be excavated, obtain a determination as to the nature from the project manager. The

variation is derived from the determination. If no prior determination has been obtained, the variation, if any, is to be made only at the project manager's discretion.

**107 Use of Explosives**

Do not use explosives.

**108 Site Investigation**

A site investigation was made and a copy of the report is included in the contract documents. The site investigation information given in the report, or shown on the drawings, or both, is information on the nature of the ground at each tested part. It is not a complete description of conditions existing below the surface. The accuracy of the information is not guaranteed and will not be a basis for cost variation.
If unnatural or unhealthy material (potentially destructive) is found, notify the project manager and arrange for an inspection by a building surveyor and or health inspector.

**109 Provisional Depths**

The footing or strip depths shown on the drawings are provisional.
Approval of the relevant building surveyor and project manager is required for actual depths on the site.
If there have been variations to the contract levels or dimensions of excavations, do not commence back-filling or place permanent work in excavations until the project manager has made measurements and approved them.

**110 Site Management**

Pest Management Plan where applicable. Refer SECTION 10290 PEST CONTROL.
Inspection: give the project manager at least 1 working day's notice that the following are ready for inspection:
-rock encountered in the excavations;
-excavation completed to contract levels;
-filling completed to contract levels;
-completed placement of waterproof membrane.

**111 Excess Excavation**

Excessive excavation and consequent backfilling and compacting may not be claimed as a reason for extra payment.

**112 Termite/Pest Treatment**

Refer to trade section 02360 TERMITE CONTOL and 10290 PEST CONTROL.

**113 Protection of Essential Services**

Ensure all in-ground and essential services located within the zone of any excavation or trench is identified as specified in the supplier information for working near, over or under an essential service and adequately protected to prevent damage to service or disruption of the service

## PART II MATERIALS

**201 Termite/Pest Control**

Supply approved mechanical termite shields or natural ethical substances in accordance with supplier's recommendations. Refer to trade section 02360 TERMITE CONTOL and 10290 PEST CONTROL. Comply with AS 3660 in selecting appropriate material.

**202 Filling**

Bring filling on to the site unless it can be provided from spoil recovered from the site. Filling is to be sound material, free of perishable material, or material that will form stable fill, but subject always to project manager's approval.
Fill generally as required or as shown on the drawings, and as follows:
Under concrete floor slabs cast on ground:
First 50mm below slab: sand blinding.
Remainder: 100mm crushed rock for non-suspended slab.
Remainder: approved excavated material for suspended slabs.
Back-fill: approved excavated material unless otherwise specified.
To retaining walls or walls below grade: free draining granular material.
The filling types are as follows:

A. Approved excavated material: the best of the clean inorganic excavated material, approved by the project manager.
B. Hardcore: clean hard filling such as broken brick or stone rubble, consolidated in position.
C. Porous filling: hard core graded from 40mm to 15mm.
   Sand: salt free, loam free, packing quality.
   Fine crushed rock: 15 to 5mm clean crushed rock.

**203 Waterproof Membrane**

Approved flexible polymeric film 0.2mm thick. Deliver underlays to the site in suitable protective packaging, bearing the name of the manufacturer. Handle and store the underlay so that it is not punctured, torn or otherwise damaged. Comply with AS/NZS 4200.

## PART III EXECUTION

**301 Examine Conditions**

Identify the correct site. Obtain written verification from the project manager of the correct site. Ensure that survey pegs or markers are in place or visible. Obtain a current copy of site survey.
Start of work means total acceptance of conditions.

**302 Excavations Generally**

A. Identify, confirm and locate the type, depth and type of services at the site so as to prevent damage or contact and in compliance with service owner requirements.
B. Suspend ground works during inclement weather which would result in unsatisfactory work.
C. Excavate accurately to shape and profile and keep free from loose earth and stones.
D. Excavate generally as required or as shown on the drawings, including but not necessarily limited to the following:
Removal of footings and unnatural items to 900mm below grade.
Preparation of sub-grade as necessary. Refer clause 107.
E. Trim the sub-grade surface evenly to the profiles shown on the drawings.
F. Make allowance for settlement and compaction.
G. Allow for falls in slabs on grade to streets, lanes and outlets.
H. Prepare for underground services, referred to in other trade sections of the specification.
I. Prepare for strip footings, footing beams, pad footings, ducts and pits, to depths shown.
J. Carry out additional excavation where necessary to permit full use of suitable mechanical equipment (e.g. rippers) and back-fill with appropriate material as specified in this trade section.
K. Where excavation exceeds the required depth, fill back to correct depth with material as follows:
-below slabs on ground: hardcore.
-below footings, beams and other structural elements: concrete of strength equal to the structural element, minimum 15MPa.

**303 Disposal and Stockpiling of Excavated Material**

Dispose of excavated material to approved locations.
Comply with relevant authorities' requirements regarding stockpiling.

**304 Bad Ground**

Should unsuitable material be encountered at the prescribed depths of excavation, or soft, wet and unstable areas develop during excavation, obtain instructions from the project manager before carrying out additional excavations. Back-fill and compact to the correct levels as directed.

**305 Existing Services**

Remove existing services and seal beyond the site boundaries.
Before demolishing and removing parts of building having existing services, i.e., electrical wiring, gas and water pipes, tanks etc., conduit or similar items embedded in them, notify the project manager, authorities having jurisdiction, and make sure that these items are out of service, as per service provider requirements so that they can be removed without danger.

**306 De-Watering**

Maintain excavations, levelled and filled areas free of water by temporary catch drains, sumps, pumping, bailing or whatever means are suitable and effective and in compliance with environmental requirements so as to prevent environmental spill or damage.
Immediately before placing concrete or masonry on ground, remove free water and foreign matter.
Prevent water flow over freshly laid work.

**307 Shoring, battering, benching or Geo-Technical Engineer**

Provide shoring, battering, benching or the engagement of a practising professional geo-technical engineer to ensure any excavation or trench requiring statute or local compliance, meet such requirements, and as necessary to retain the sides and ends of the excavations and to ensure the controls are documented in the Safe Work Method Statement. Provide safety covers over holes greater than 100mm.. Provide necessary underpinning or support for adjacent buildings or structures to the requirements of an independent practising professional geo-technical engineer..
Order the provision of additional support.
No instruction relieves the builder of sole responsibility for the sufficient support of the excavation.
Guard against the formation of voids outside sheeting or sheet piling (if used), and should voids form, fill and consolidate them to approval.

**308 Filling Schedule**

Refer clause 202 above.

**309 Bearing Surfaces in Rock**

Where structural loads bear on rock, unless otherwise specified, scabble the rock face to give even plane bearing surfaces. Level unless required to be sloping or stepped.

Bored pier holes are to be taken a minimum of 150mm below the rock surface and the bottoms cleaned of loose matter.

**310 Compaction**

Place filling in layers not exceeding 150mm deep when measured loose.
Bring filling to optimum water content by watering, and compact each layer thoroughly and uniformly with a vibrating roller where practicable.
Hand tamp against ground or perimeter beams or walls.
Compact each layer of filling to obtain a uniform density of not less than 95% of the maximum density at optimum moisture content as determined by the dry density/moisture content tests set out in AS 1289.
Finish the base to the following tolerances:
Variation from designed level: 5mm
Variation from 3000mm straight edge: 5mm

**311 Termite Treatment**

Refer to trade section 02360 TERMITE CONTROL and 10290 PEST CONTROL.

**312 Polymeric Waterproof Membrane**

Lay on approved sand blinding - Refer clause 203. Where necessary, cut sheets to maximum practical width, to suit the layout, and arrange laps to face away from the direction of the pour.
Provide laps as recommended by the manufacturer, but not less than 200mm. Seal laps with pressure adhesives or tapes as recommended by the manufacturer of the underlay and ensure that the adhered surface of the underlay is dry and clean.
Take the underlay up walls to level of top of future concrete slab or as otherwise instructed. Seal service pipes and similar elements when they penetrate the underlay. Allow ample slack to avoid pulling at tape junctions.
Cover vertical or inclined surfaces in an unbroken sheet where possible. Otherwise arrange laps vertically to avoid pulling at joints. Fix at the top with tape or other recommended fixing.
Inspect membrane after laying and before concrete is poured. Patch and seal punctures.

**313 Maintenance of Membranes And Underlays**

Maintain the membrane or underlays in their best possible condition throughout the construction period.
Repair immediately, to the approval of the project manager, damage which does occur.

**314 Site Investigation Report**

**315 Clean Up**

On completion of work specified above, remove surplus materials imported to the site, level off surplus excavated material, or pile such material on the site as directed by the project manager.

**316 Completion**

Complete contracted work in accordance with contract documents and written variation orders issued by the project manager.

**END OF SECTION**

## PART I GENERAL

### 101 Scope

The work of this trade section includes but is not limited to supplying and installing a complete system of monolithic stabilised earth walls exclusively by a member of the Affiliated Stabilised Earth Group (ASEG) using the "Stabilform" formwork system and also includes:
Formwork.
Earth materials.
Cement.
Waterproofing of admixture.
Sealing of completed walls.
Testing of materials by NATA approved laboratory.

### 102 Related Work

Co-ordinate and co-operate with the following trades:

| | |
|---|---|
| Site preparation – Excavation | Concrete |
| Structural steel | Carpentry |
| Plumber | Electrician |
| Mechanical Services | Wall surfacing trades |

### 103 Quality Assurance .

Structural adequacy certified by Registered Practising Engineer (RPE).
Perform the work solely under the direct control of a member of ASEG, see clause 101, who will select the tradespeople for the work and ensure that the work complies with the requirements of relevant statutory authorities.

### 104 References

Comply with applicable portions of the following Australian Standards:

| | |
|---|---|
| AS 1289 | Methods for testing soils for engineering purposes. |
| | 1289.3.1.1 2009. |
| | 1289.3.2.1 2009. |
| | 1289.3.3.1 2009. |
| | 1289.3.4.1 2008. |
| | 1289.3.6.1 2009. |
| | 1289.5.2.1 2003. |
| AS 1428 | Design for access and mobility. |
| | 1428.1 2009 General requirements for access – New building work. |
| | *There are 5 other parts. 1992 – 2010.* |
| AS 3610.1 2010 | Formwork for concrete –Documentation and surface finish. |
| AS 4678 2002 | Earth-retaining structures |

### 105 Submissions

The sub-contractor (member of ASEG) is required to submit for approval and testing, the materials required for the construction of stabilised earth walls and to provide written description of:
The location of material source with an estimate of the quantity of material available at the source.
Method of excavation of the material.
Proposed location of stockpiling of material, if necessary, at the site.
Safe Work Method Statement prepared for high risk works associated with this trade section to be documented and approved by the contractor prior to commencement of work controlled by a requirement of an Act, regulation, Code of Practice or Australian Standard.

### 106 Laboratory Testing of Materials

The materials to be tested are listed in clause 201 of this specification.
Arrange for tests to be performed by a NATA registered laboratory in accordance with its terms of registration.

A. Tests required include:
   Soil tests
   Consistency limits (Atterberg limits)

| | |
|---|---|
| Liquid limit: | AS 1289.3.1.1 |
| Plastic limit: | AS 1289.3.2.1 |
| Plasticity index: | AS 1289.3.3.1 |
| Linear shrinkage: | AS 1289.3.4.1 |
| Particle size distribution: | AS 1289.3.6.1 |

B. Testing by method 5.2.1: soil compaction and density determination of the dry/moisture content relation of a soil using modified compactive effort: To AS 1289.5.2.1 - 2003.
   Include in the test reports:
   1. Cement content by volume.
   2. Elapsed time between addition of cement and compaction.
   3. Date moulded.

4. The dry density corresponding to the maximum point on the moisture content/dry density curve as the “modified maximum dry density” in tonnes per cubic metre to the nearest 0.01
5. The percentage moisture content corresponding to the maximum dry density on the moisture content to the nearest 0.5.
6. The percentage of oversize material retained on the 19mm sieve or the 37.5mm sieve on which the material is retained whichever is applicable, to the nearest 1.
7. When required, the plot of dry density against moisture content.

C. Samples to be retained in the mould for 12 hours and air cured in an open environment for 7 days.
Test results on the specimens to include:
1. Material retained on the 19.0mm sieve as a percentage of the moist mass in the original sample.
2. Details of replacement of coarse material, if applicable.
3. When a binder is used, elapsed time between addition of the binder and compaction.
4. Moisture content at which specimens were compacted.
5. Details of curing.
6. Moisture content of specimens on completion of testing.
7. Compactive effort applied, method of compaction, and number of layers.
8. Dry density of specimens as compacted, to the nearest 0.01 t/m3 and if required percentage of maximum dry density of each specimen.
9. If required, the laboratory moisture ratio of the material prior to compaction.
10. The normal height and diameter of the specimens, in millimetres.
11. Unconfined compressive strength, as the average of the strength of 2 test specimens to the following precision:
For UCS less than 1.0 Mpa, report to the nearest 0.02 Mpa.
For UCS between 1.0 Mpa and 2.0 Mpa, report to the nearest 0.1 Mpa
For UCS greater than 2.0 Mpa, report to the nearest 0.2 Mpa.
12. When a binder is used, the method of preparation of the test sample.

D. Conformance tests.
Characteristic adjusted compressive strength test
Samples to be taken from batch being placed on construction site. *1 specimen to be compacted for each test. Specimens to be compacted in a 90mm diameter x 200mm high cylinder.* Samples to be retained in mould for 12 hours and air cured in an open environment for minimum 7 days.
Report to include:
1. Identification of project and the manufacturer of the specimens.
2. Date and location of sampling if possible.
3. Identification of particular wall sample was used to construct.
4. Date of test.
5. Cement content by volume.
6. The compressive strength, in megapascals, of each specimen.
7. Aspect ratio of each specimen.
8. The adjusted compressive strength of each specimen.
9. The characteristic compressive strength.

## PART II MATERIALS

### 201 Materials

A. Materials may be gravels, laterite soils and soil blends.
Soil contents:

| | |
|---|---|
| Organic content | Less than 2% |
| Clay and silt content | Material below .075mm to be below 20% |
| Sand content | Material between .075mm and 4.75mm to be not less than 50% |
| Gravel content | Material between 4.75mm and 75mm to be above 30% |

Not more than 5% to be retained on 37.5mm screen size.
Cement content by volume to be 6% minimum to 10% maximum determined by Mix Design and Strength Evaluation test.

B. Materials may also be:
Recycled crushed brick rubble.
Crushed building rubble from nominated supplier to supplier’s standard.
Cement content to be no less than 10%. Proportion to be determined by Mix Design and Strength Evaluation test.
A minimum of 8% cement by volume to be used in reinforced earth walls.

C. Compressive strength
Minimum characteristic compressive strength (Cca) of 2.5 Mpa.

D. ASEG Plasticure
To be added at a rate of between 0.125 and 0.75 litres per tonne (1000kg) of dry mix. Rate will be determined by specific mix designs.

E. Anchors and Fixing
1. Structural fixings
Ramset Chem Set Injection System. Structural fixing should be located no less than 150mm from top or side edge of the stabilised earth wall. Holes should be drilled a minimum of 3mm larger

than anchor diameter and be thoroughly blown out before injecting epoxy resin. Any overspill in visible areas will need to be wiped away immediately.

2. Securing wall frames, window frames, door frames.
   Secure by one of the following means:
   Ramset Ramplug Nylon Plug Fasteners
   Hilti HRD-H Plastic Frame Anchors
   Avdel Excalibur Screw Bolts
3. Fastening aluminium windows, pipes and cables, timber battens and components for electrical and plumbing installations.
   Secure by one of the following means:
   Hilti HPS-1 Impact Anchors
   Ramset Nylon Anchors
   Ramset Masonry Anchors

## PART III EXECUTION

### 301 Examination

Inspect site conditions before starting work. Arrange with contractor for rectification found necessary to facilitate wall construction.
Start of work means total acceptance of conditions.

### 302 Damp Proof Course

Form a damp proof course (DPC) between the footings/slab surface and the stabilised earth walls, using an embossed plastic fabric strip suitable to the thickness of the wall.
Protect the face of a stabilised earth wall below finished ground level by application of a cement slurry “Silasec” admixture or similar. Do not compromise the damp proof course with surrounding soil or pavement built up higher than the footing or slab surface.

### 303 Formwork

Place formwork in accordance with ASEG written instructions and maintain in position for 12 hours after placement of material. Formwork to be documented in a document titled Formwork Plan and in accordance with an Act, Regulation, Code of Practice or Australian Standard as applicable.

### 304 Vertical Steel Reinforcing

Avoid steel reinforcing wherever possible due to complications with vertical shrinkage along the embedded steel. Lag vertical steel reinforcing to prevent stabilised earth adhering to and shrinking along the bar. Protect vertical and horizontal ends of exposed reinforcing to prevent contact with persons at or near the work location.

### 305 Construction Joints

Locate construction joints as shown on drawings. Form mechanical keys at each construction joint and fix 25 x 25mm bitumen impregnated foam strip to full height of wall. Foam strip to extend 100mm along floor or footing surface to ensure a complete seal at the bottom of the construction joint. Form 25mm V joint on both wall faces.

### 306 Chamfers

Form 45mm chamfer at ends of wall panels or exposed corners.

### 307 Electrical and Other Services

Seal electrical components to be cast in wall to prevent penetration of soil during compaction. Boxes to be located at heights specified. A minimum of 100mm cover to be allowed for cast in conduit, pipes, etc. Water pipes to be suitably lagged to prevent penetration by sharp stones during compaction or chemical reaction to pipes by associated chemicals etc.
Where conduits and pipes cross construction joints provide for a suitable means of absorbing movement without fracturing.

### 308 Placement and Finish

Place blended material in forms in 200mm (maximum) layers and compact within 2 hours of blending.
Surface finish to be generally consistent throughout with the colour and texture of an approved sample.

### 309 Construction Tolerance

Finish work true and free from bulging in the wall surface. The maximum allowable deviation from true position to be 10mm horizontally and 3mm vertically per 600mm formwork lift. Trueness of surface and joints to be in accordance with AS 3610.1 Class 3.

### 310 Anchors and Fixing

Locate accurately penetrations required for connecting walls to structural frames, window and door frames and other installations.
Refer clause 201 E for types of anchors.

**311 Sealing of Stabilised Earth Walls**

Internal walls: Seal with a water born acrylic sealer diluted sufficiently with clean water to allow deep penetration and clear low sheen finish.
External walls exposed to extreme wind-driven rain: apply a flood coating of a solvent born silane-siloxane system at recommended application rate.

**312 Protection of Stabilised Earth Walls**

Emphasise to other sub-contractors that the stabilised earth walls are off-form finished. It will be the builder's responsibility to remove any staining or markings on the walls caused by other trades or staining caused by leeching of hardwoods onto the walls.

**313 Cleaning**

Remove formwork and debris from each work area after stripping forms. Leave area clean to the satisfaction of the project manager.

**314 Completion**

Complete contracted work in accordance with contract documents and written variation orders issued by the project manager.

**END OF SECTION**

## PART I GENERAL

**101 Scope**
The work of this trade section includes but is not limited to the control and/or management of termites on building sites for both new and existing buildings.

**102 Related Work**
Co-ordinate and co-operate with each trade involved in the construction of the building, and in particular:
Site Preparation

**103 Quality Assurance**
Where specialist sub-contractors are engaged, provide formal documentary evidence of experience and skills which meet the requirements of the Australian Standards.

**104 References**
Comply with applicable portions of the following Australian Standards which are requirements of the Building Code of Australia:

| | | |
|---|---|---|
| AS 3660 | Termite management. | |
| | 3660.1 2000 | New building work. |
| | 3660.2 2000 | In and around existing buildings and structures. |
| | *There is 1 other part, 2000.* | |
| AS 4349 | Inspection of buildings. | |
| | 4349.3 2010 | Timber pest inspections*. There are 2 other parts, 2007.* |

Comply with requirements of statutory and local authorities having jurisdiction.

**105 Submissions**
Obtain a written statement, from each proposed sub-contractor tendering for the work, that the work to be performed will comply with the relevant Australian Standard.

**106 Warranty**
Provide a written warranty from the sub-contractor stating the period of years of protection from termite damage. Provide also a written statement that the work performed complies 100% with the requirements of AS 3660.

## PART II MATERIALS

**201 Acceptable Manufacturers**
Contact the Australian Environmental Pest Managers Association via www.aepma.com.au.
Obtain a list of approved members who may quote for the work required.

**202 Materials**
The materials to be used are determined by the method chosen and adopted.
Require the sub-contractor to supply a list of materials to be used.

**203 Equipment**
Provide equipment needed to effect a treatment which complies with the Australian Standards.

## PART III EXECUTION

**301 Examination**
Visit site and inspect conditions, comparing conditions to the drawings before delivery of materials to site.
Rectify any discrepancy or unsuitability of substrata.
Start of work means total acceptance of conditions.

**302 Co-ordination**
Arrange for co-operation of other trades to ensure effective pest control. Take care of materials. Prevent damage before and during installation.

**303 Preparation**
Co-ordinate with and ensure preparatory work by other trades is done prior to commencement of work and arrange for provision and fixing grounds.

**304 Installation**
Comply with appropriate Australian Standard.
Take care of and protect surrounding work, including other finishes, equipment and components, during installation. Provide protective covering where necessary.

**305 Installation Particulars**

Comply in all respects with manufacturer's recommendations contained in technical bulletins. Call for technical advice where necessary. Refer clause 105.

Comply with occupational health, safety and environmental requirements of the statutory and local authority during the conduct of the works, including preparation of Safe Work Method Statement, training, instruction and supervision of involved workers.

**306 Protection**

Protect finished work.

**307 Cleaning**

Clean the site where work of this trade is performed.

Remove surplus material.

**308 Completion**

Complete contracted work in accordance with contract documents and written variation orders issued by the project manager.

**END OF SECTION**

## PART I GENERAL

### 101 Scope

The work of this section includes but is not limited to the distribution of cold water to sanitary and other fittings:
Site water distribution
Filter media for water treatment
Roof water collection tanks
Potable water storage tanks
Gravity feed tanks
Fire fighting equipment
Water supply wells
Irrigation
Other:

### 102 Related Work

Co-ordinate and co-operate with the following trades:

| | |
|---|---|
| Sanitary sewerage | Piped energy distribution |
| Storm drainage | Irrigation systems |
| Fire hydrants and hosereels | Plumbing fixtures |
| Finishing trades | |

### 103 Quality Assurance

Perform the work of this section using tradesmen whose experience and skills meet the requirements of controlling statutory authorities.

### 104 References

Comply with applicable portions of the following Australian Standards:

| | | |
|---|---|---|
| AS/NZS 1254 2010 | PVC-U pipes and fittings for stormwater and surface water applications. | |
| AS/NZS 1260 2009 | PVC-U pipes and fittings for drain, waste and vent application. | |
| AS 1357 | Valves primarily for use in heated water systems. | |
| | 1357.1 2009 | Protection valves. |
| | 1357.2 2005 | Control valves. *2 Amdts 2006, 2009.* |
| AS 1432 2004 | Copper tubes for plumbing, gasfitting and drainage applications. | |
| AS/NZS 1477 2006 | PVC pipes and fittings for pressure applications. *1 Amdt 2009.* | |
| AS 1628 1999 | Water supply - Metallic gate, globe and non-return valves. *Plus 1 Amdt 2001.* | |
| AS/NZS 2032 2006 | Installation of PVC pipe systems. *Plus 1 Amdt 2008.* | |
| AS 2118 | Automatic fire sprinkler systems. *There are numerous parts covering domestic and commercial buildings* | |
| AS/NZS 2492 2007 | Cross-linked polyethylene (PE-X) pipe for pressure applications. | |
| AS 2537 2011 | Mechanical jointing fittings for use with cross-linked polyethylene (PE-X) for pressure applications. *There are 5 parts.* | |
| AS/NZS 3500 | Plumbing and drainage. | |
| | 3500.1 2003 | Water services. *Plus 2 Amdts, 2005 - 2010.* |
| | 3500.1.1 1998 | Water supply - Performance requirements. |
| | *There are several other parts, 1996 – 2012, plus Amdts.* | |
| AS 3688 2005 | Water supply – Metallic fittings and end connectors. | |
| AS/NZS 4130 2009 | Polyethylene (PE) pipes for pressure applications. *Plus 1 Amdt 2009.* | |
| AS/NZS 4765 2007 | Modified PVC (PVC-M) pipes for pressure applications. | |
| AS 4809 2003 | Copper pipe and fittings – Installation and commissioning. *Plus 1 Amdt 2003.* | |
| AS/NZS 5065 2005 | Polyethylene and polypropylene pipes and fittings for drainage and sewerage applications. *Plus 1 Amdt 2010.* | |
| HB 263 2004 | Heated water systems. | |

Comply with requirements of statutory authorities having jurisdiction.

### 105 Submissions

Before ordering scheduled material, submit required product data to the project manager, particularly where the specified material is not available and alternatives are offered.

### 106 Warranty

Provide the proprietor with warranties covering:

A. Materials: in the form supplied by manufacturers of specified components.
B. Installation, for years from the date of Practical Completion: the complete piping installation and the specified components to which it is connected.

### 107 Fees

Pay fees to the relevant statutory authorities.

**108 As Built Drawings**
Comply with clause 40 of DOCUMENT 00800 SUPPLEMENTARY CONDITIONS OF CONTRACT.

## PART II MATERIALS

**201 Acceptable Manufacturers**
Before ordering materials obtain and provide to the project manager a written statement that items to be installed are approved by statutory authorities having jurisdiction.

**202 Materials**

| Item | Type Required | Diameters |
|---|---|---|
| **Pipes** | Copper, polyethylene, polybutylene or galvanised steel | |
| Service line | | Refer drawings or 25mm, 20mm or other |
| Branches to fittings | | Refer drawings or 15mm or other |
| Other lines | | |
| Jointing | Pushfit, capillary, brazed, compression, solvent-welded or other | |
| Valves | | |
| Stop taps | | |
| Fixing devices | | |
| **Other items** | | |
| Tanks – gravity feed | | |
| Roof water tanks | Specify the construction of the platform under the tank in the appropriate roofing trade section. Also refer to 15450 WATER STORAGE TANKS | |
| Filter media | | |
| Chrome plating | All exposed brass or copper pipes | |
| **Other finishes** | | |

**203 Equipment**
Provide necessary equipment to effect a complete installation of each part of this section, including seals, jointing materials, flanges, etc.

**204 Fabrication**
Fabricate components in a manner approved by the local authority and the project manager. Comply with requirements of relevant Australian Standards where applicable.

## PART III EXECUTION

**301 Examination**
Visit the site before delivery of materials, and compare conditions with those shown on drawings.
Start of work means total acceptance of conditions.

**302 Connections to Supply**
Arrange with the supply authority, obtain and install required meter equipment complete with meter housing, and connect in accordance with the authority's requirements.

**303 Below Ground Installation**
Prepare trenches or openings and lay pipes at approved depth on approved base material.
Lay out service trenches to minimize runs of pipes, drains and cables.
Ensure statutory or local authority requirements for excavations and trenches are implemented, monitored and maintained to completion of works. On completion, back-fill with approved material and cover with approved material and consolidate as required by the statutory authority and the project manager. Maintain required distances between pipes of different sorts, and pipes and the structure. Record the type, location and depth of each service installed on a plan titled “As-built services plan”. The plan to also show terminations and removed existing services and approvals of same from service owner(s).

**304 Fabrication and Jointing**
Fabricate and join components to the project manager's and the authority's approval, to applicable Australian Standards and to the manufacturers' instructions.

**305 Installation**

Install components to the project manager's and the authority's approval, to applicable Australian Standards and to the manufacturer's instructions.

Co-ordinate with and protect workers in other trades, particularly where pipes pass through other elements of the building and plan relevant work to produce the whole installation in proper sequence and to statutory compliance by workers involved in the installation or affected by the installation works.

Ensure that interfaces are of appropriate size and type and are properly sealed.

Seal penetrations as needed to achieve a watertight installation. Refer to the warranty clause in Part I.

**306 Testing**

Cover no pipes, joints or connections until tested and passed by the relevant authority, and approved by the project manager.

Submit to the project manager copies of certificates issued by relevant authorities.

**307 Protection**

Protect work of this section from damage until Practical Completion is achieved.

**308 Cleaning**

On completion, remove debris and clean visible work to the project manager's satisfaction.

**309 Completion**

Complete contracted work in accordance with contract documents and written variation orders issued by the project manager.

**END OF SECTION**

## PART I GENERAL

### 101 Scope

The work of this trade section includes but is not limited to supplying and laying a complete system of sewer pipes as specified below and as detailed on (architectural or hydraulics engineering) drawings, including:
Sewer drains from each fitting or installation.
Sanitary pits and cleanouts
Sewer manholes, frames, covers
Sewer pumping stations (packaged)
Septic tank, drainage field and distribution boxes
Grease interceptor
Sand filter
Siphon tank
Connection to municipal sewer drains or other means of disposal.

### 102 Related Work

Co-ordinate and co-operate with the following trades:

| | |
|---|---|
| Site preparation – Excavation | Bituminous concrete pavement |
| Concrete pavement | Plumbing fixtures |
| Storm drainage | Lawns and grasses |

### 103 Quality Assurance

Perform the work of this trade section using tradesmen whose experience and skills meet the requirements of controlling statutory authority.
The project manager and engineer will make random inspections during the execution of the work.

### 104 References

Comply with applicable portions of the following Australian Standards:

| | | |
|---|---|---|
| AS/NZS 1254 2010 | PVC-U pipes and fittings for stormwater and surface water applications. | |
| AS/NZS 1260 2009 | PVC-U pipes and fittings for drain, waste and vent application. | |
| AS/NZS 1546.1 2008 | On-site domestic wastewater treatment units - Septic tanks. | |
| | 1546.2 2008 | Waterless composting toilets. |
| | 1546.3 2008 | Aerated wastewater treatment systems |
| AS 1741 1991 | Vitrified clay pipes and fittings with flexible joints - Sewer quality. | |
| AS/NZS 2032 2006 | Installation of PVC pipe systems. *Plus 1 Amdt 2008.* | |
| AS/NZS 3500 | Plumbing and drainage. | |
| | 3500.0 2003 | Glossary of terms. |
| | 3500.2 2003 | Sanitary plumbing and drainage. |
| | 3500.2.1 1996 | Sanitary plumbing and drainage - Performance requirements. |
| | *There are several other parts, 1996 – 2012.* | |
| AS/NZS 4494 1998 | Discharge of commercial and industrial liquid waste to sewer - General performance requirements. | |

Perform work also in accordance with the regulations and requirements of the council's engineer, and drawings provided by council and engineer for the purpose.
Comply with requirements of any statutory authority having jurisdiction.

### 105 Submissions

Evidence of payment of all relevant fees.

### 106 Warranty

Provide to the proprietor a warranty covering:
A. Materials: in the form supplied by manufacturers of specified components.
B. Installation for years from the date of Practical Completion: the complete drainage installation.

### 107 As Built Drawings

Comply with clause 40 of DOCUMENT 00800 SUPPLEMENTARY CONDITIONS OF CONTRACT.

## PART II MATERIALS

### 201 Acceptable Manufacturers

Before ordering materials obtain and provide to the project manager a written statement that items to be installed are approved by statutory authorities having jurisdiction.

### 202 Materials

Sewer drain pipes:
Tested vitrified clay with rubber ring joints.
UPVC sewer grade pipes with solvent joints.

Conform with local authority's requirements.
Pits: 20 MPa and comply with local authority's requirements.

## PART III EXECUTION

**301 Examination**
Visit site and inspect conditions, comparing conditions to drawings before delivery of materials to site.
Start of work means total acceptance of conditions.

**302 Records**
Obtain essential services information (Dial Before You Dig).
Record underground services including type, depths and physical location.

**303 Trenching**
Prepare trenches or openings and lay pipes at approved depth on approved base material. Ensure statutory or local authority requirements for excavations and trenches are implemented, monitored and maintained to completion of works. On completion, back-fill with approved material and cover with approved material and consolidate as required by the statutory authority and the project manager. Maintain required distances between pipes of different sorts, and pipes and the structure. Record the type, location and depth of each service installed on a plan titled "As-built services plan". The plan to also show terminations and removed existing services and approvals of same from service owner(s).

**304 Pipe Laying**
Connect with rubber rings and with inspection openings at 6 metre intervals and at bends and junctions.
Connect with materials appropriate to the pipes in accordance with manufacturer's instructions.
Provide inspection openings, bends and junctions required by authorities.

**305 Pipes Below Structures**
Where sewer or drain pipes are laid below or under structures, comply with requirements of local authority.

**306 Connections to Other Services**
Seal thoroughly with water-tight material as recommended by component manufacturer.
Connect new lines to road or street sewer and drainage to the requirements of the relevant authority.

**307 Testing**
Cover no pipes or joints until approved by the project manager and tested and passed by the relevant authority.

**308 Backfill**
After inspection (and testing) where required, back-fill with approved material.
Such material requires approval from local council engineer and project manager. Remove materials not conforming to such requirements, without cost to the proprietor.

**309 Protection**
Protect completed work from damage until Practical Completion. Make good damage if it occurs.

**310 Cleaning**
Remove debris and clean areas where work has been performed, to project manager's satisfaction.

**311 Completion**
Complete contracted work in accordance with contract documents and written variation orders issued by the project manager.

**(Schedule of Sanitary Items at end of document)**

**END OF SECTION**

## PART I GENERAL

### 101 Scope

The work of this trade section includes but is not limited to, supplying and laying a complete system of site stormwater drainage and:
Excavation, bedding and backfilling for drain lines
Foundation drainage piping
Agricultural drains (including plastic)
Drains below slabs on ground
Culverts, pits, manholes, frames, covers
Water retention pits
Connection to main street drain or other nominated outlet.

### 102 Related Work

Co-ordinate and co-operate with the following trades:

| | |
|---|---|
| Site preparation – Excavation | Bituminous concrete pavement |
| Concrete pavement | Masonry unit pavers |
| Concrete | Landscaping trades |

### 103 Quality Assurance

Perform the work of this trade section using tradesmen whose experience and skills meet the requirements of controlling statutory authority.
The project manager and engineer will make random inspections during the execution of the work.

### 104 References

Comply with applicable portions of the following Australian Standards:

| | | |
|---|---|---|
| AS 1379 2007 | Specification and supply of concrete. *Plus Supplement 1-2008.* | |
| AS/NZS 3500 | Plumbing and drainage. | |
| | 3500.3 2003 | Stormwater drainage. *Plus 3 Amdts, 2006 - 2012* |
| | 3500.3.1 1998 | Stormwater drainage - Performance requirements. |
| | *There are several other parts, 1996 – 2012* | |
| AS 3600 2009 | Concrete structures*. Plus 2 Amdts, 2010, 2013.* | |

Comply with requirements of any statutory authority having jurisdiction.

### 105 Submissions

Evidence of payment of all relevant fees.

### 106 Warranty

Provide to the proprietor a warranty covering:
A. Materials: in the form supplied by manufacturers of specified components.
B. Installation for years from the date of Practical Completion: the complete drainage installation.

### 107 As-Built Drawings

Comply with clause 40 of DOCUMENT 00800 SUPPLEMENTARY CONDITIONS OF CONTRACT.

## PART II MATERIALS

### 201 Acceptable Manufacturers

Before ordering materials obtain and provide to the project manager a written statement that items to be installed are approved by statutory authorities having jurisdiction.

### 202 Materials

A. Stormwater pipes concrete:
Reinforced concrete:
Unreinforced concrete:
B. Stormwater pipes
Untested vitrified clay with rubber ring joints
UPVC stormwater grade pipes with solvent joints
Low density polyethylene
C. Steel pipes
Galvanised steel
D. Agricultural drains
Aggregate:
Manufactured plastic frame type:
E. Culverts
Concrete metal or plastic:
Pits, concrete, plastic:

Manhole frames and covers:

## PART III EXECUTION

**301 Examination**
Visit site and inspect conditions, comparing conditions to drawings before delivery of materials to site.
Start of work means total acceptance of conditions.

**302 Records**
Obtain essential services information (Dial Before You Dig).
Record underground services including type, depths and physical location.

**303 Trenching**
Prepare trenches or openings and lay pipes at approved depth on approved base material. Ensure statutory or local authority requirements for excavations and trenches are implemented, monitored and maintained to completion of works. On completion, back-fill with approved material and cover with approved material and consolidate as required by the statutory authority and the project manager. Maintain required distances between pipes of different sorts, and pipes and the structure. Record the type, location and depth of each service installed on a plan titled “As-built services plan”. The plan to also show terminations and removed existing services and approvals of same from service owner(s).

**304 Pipe Laying**
Lay pipes 600mm clear of walls.
Connect with rubber rings and with inspection openings at 6 metre intervals and at bends and junctions.
Connect with materials appropriate to the pipes in accordance with manufacturer's instructions.
Provide inspection openings, bends and junctions required by authorities.

**305 Pipes Below Structures**
Where drain pipes are laid below or under structures, comply with requirements of local authority.

**306 Connections to Other Services**
Seal thoroughly with water-tight material as recommended by component manufacturer.
Connect new lines to road or street drainage to the requirements of the relevant authority.

**307 Testing**
Cover no pipes, joints or connections until approved by the project manager and tested and passed by the relevant authority.

**308 Backfill**
After inspection (and testing) where required, back-fill with approved material.
Such material requires approval from local council engineer and project manager.
Materials not conforming to such requirements or not approved will be removed without cost to the proprietor.

**309 Protection**
Protect completed work from damage until Practical Completion. Make good damage if it occurs.

**310 Cleaning**
Remove debris and clean areas where work has been performed by this trade, to the satisfaction of the project manager.

**311 Completion**
Complete contracted work in accordance with contract documents and written variation orders issued by the project manager.

**END OF SECTION**

## PART I GENERAL

### 101 Scope

Supply and install a complete installation of bituminous concrete paving including but not limited to:
Excavation.
Preparation of sub-grade.
Base courses, laying and compaction.
Concrete kerbing.
Bituminous concrete surfacing.
Lane marking.

### 102 Related Work

Co-ordinate and co-operate with the following trades:

| | |
|---|---|
| Site preparation – Excavation | Sanitary sewerage |
| Storm drainage | Concrete pavement |
| Lawns and grasses | Exterior plants |

### 103 Quality Assurance

Provide data indicating that the tradesmen engaged for this project have a minimum of 5 years of experience in such work as required by this specification.
Supply names of contacts, with telephone numbers, who can verify performance quality.

### 104 References

Comply with applicable portions of the following Australian Standards:

| | | |
|---|---|---|
| AS 2008 2013 | Bitumen for pavements | |
| AS 2150 2005 | Hot mix asphalt – A guide to good practice. | |
| AS 2758 | Aggregates and rock for engineering purposes. | |
| | 2758.1 1998 | Concrete aggregates. |
| | 2758.2 2009 | Aggregate for sprayed bituminous surfacing. |
| | *There are 5 other parts, 1996 – 2009.* | |
| AS 2876 2000 | Concrete kerbs and channels (gutters) - Manually or machine placed. | |
| AS 4049 | Paints and related materials - Pavement marking materials. | |
| | *There are 5 parts and 1 Amdt, 2005 - 2007.* | |

AUSTROADS supplies a range of technical bulletins: www.onlinepublications.austroads.com.au.
Where relevant, comply with standards of pavement construction as available from your state road construction authority.

## PART II MATERIALS

### 201 Pavement Construction Materials

Comply with the material specification of the appropriate state road construction authority. Such specifications define materials required for various classes of load capacity.
For this project the appropriate specification is:
which defines
Crushed rock:
Base course:
Aggregate:
Bitumen:
Cut back bitumen:
Bitumen emulsion:
Tack coat:
Concrete kerbing:

### 202 Lane Marking

Local council will provide specification.

### 203 Equipment

Provide and employ equipment required for satisfactory completion of the work.

## PART III EXECUTION

### 301 Examination

Inspect the site. Determine conditions and ensure that suitable conditions exist at the time of start of work.
Prevent delay in job schedule. Start of work means total acceptance of conditions.

**302 Preparation**

Remove surface material to required depth. Test compaction capacity of natural material. Fill soft spots with crushed rock to required compaction. Shape to specified falls.
Allow for installation by other trades of drainage and other items.
Install concrete kerbing as specified in clause 201 above. Allow concrete to cure before installing basecourse.

**303 Installation of Base Course**

Comply with state road construction authority, Spec No:
See clause 201 above or spread base course material in layers between 100 and 150mm thick. Compact to 100% of standard maximum dry density with minimum 10 tonne roller.
Employ a vibrating roller as necessary. Maintain damp condition of material until seal is applied. Employ 15 tonne roller for final compaction.

**304 Testing**

Allow for 3 separate compaction density tests to be conducted in random locations by a NATA approved testing organisation. Should tests prove unsatisfactory, repair the work and repeat tests to a satisfactory result without cost to the proprietor.

**305 Pavement Courses**

Finish pavement courses consisting of layers of wet-mix crushed rock to smooth and uniform surfaces and conform to the lines, grades and cross sections shown on the drawings, within the following limits:

A. Level: the top of each pavement course: within 10 mm of level shown on drawing.
B. Thickness: of the top course of the wet mix pavement: within the tolerance of +5, -10mm.
C. Shape: finished surface of the pavement course: within 10mm either way from a 3 metre straight-edge laid parallel to the centre line of the pavement or from a template placed at right angles to the centre-line.

**306 Prime Coat**

Prime with cut back bitumen suitable for the surface of base material and prevailing weather conditions. Apply in compliance with state authority specification.

307 **Tack Coat**

If required, apply tack coat to clean dry surface. Consulting engineer will determine necessity for this item. Apply in compliance with state authority specification.

**308 Bituminous Concrete**

Prepare adjacent surfaces such as longitudinal joints, kerbs, channels, headers, manholes, etc. with a thin uniform tack coat. Install bituminous concrete with approved equipment in suitable climatic conditions. Form straight and waterproof joints with even texture and density.
Compact without delay, and finish smooth and true to established grades.
Thoroughly compact areas around kerbs, channels, manholes to same density as other surfaces.
Thickness of bituminous concrete is not to vary more than 7mm from that indicated on drawings.
Replace low or defective areas immediately by cutting out and replacing with fresh hot mix and compacting to conform to surrounding areas. Entire area is to be free draining on completion.
The finished work is not to be less than 97% of laboratory tested specified density.

**309 Lane Marking**

Comply with local authority requirements regarding sizes of parking bays and traffic control.
Mark pavement surface as instructed. Comply with AS 4049.

**310 Completion**

Complete contracted work in accordance with contract documents and written variation orders issued by the project manager.

**END OF SECTION**

## PART I GENERAL

### 101 Scope

Supply and install a complete installation of concrete paving including but not limited to:
Excavation
Preparation of sub-grade
Base courses, laying and compaction
Road construction
Concrete surfacing
Pedestrian pavements
Kerbs and channels
Lane marking.

### 102 Related Work

Co-ordinate and co-operate with the following trades:

| | |
|---|---|
| Site preparation – Excavation | Storm drainage |
| Masonry unit pavers | Bituminous concrete pavement |

### 103 Quality Assurance

Provide data indicating that the tradesmen engaged for this project have a minimum of 5 years of experience in such work as required by this specification.
Supply names of contacts, with telephone numbers, who can verify performance quality.

### 104 References

Comply with applicable portions of the following Australian Standards:

| | |
|---|---|
| AS 1289 | Methods of testing soils for engineering purposes.<br>*There are many parts, 1997 - 2009; each refers to a specific application.* |
| AS 1379 2007 | Specification and supply of concrete. *Plus Supplement 1-2008* |
| AS 2876 2000 | Concrete kerbs and channels (gutters) – Manually or machine placed. |
| AS/NZS 3661.2 1994 | Slip resistance of pedestrian surfaces – Guide to the reduction of slip hazards. |
| AS 3727 1993 | Guide to residential pavements. |
| AS 4049 | Paints and related materials - Pavement marking materials.<br>*There are 5 parts, 2005 – 2007.* |
| AS/NZS 4671 2001 | Steel reinforcing materials. *Plus 1 Amdt, 2003.* |
| HB 197 1999 | An introductory guide to the slip resistance of pedestrian surface materials. |

### 105 Submissions

Evidence of payment of all relevant fees.

## PART II MATERIALS

### 201 Pavement Construction Materials

A. Road pavements
Comply with the material specification of the appropriate state road construction authority. Such specifications define materials required for various classes of load capacity.
For this project the appropriate specification is:
which defines
Crushed rock:
Base course:
Aggregate:
Formwork:
Reinforcement fabric:
Concrete:

B. Pedestrian pavements
Base course:
Aggregate:
Formwork:
Reinforcement fabric:
Concrete:

C. Kerbs and channels
Base course:
Aggregate:
Formwork:
Reinforcement fabric:
Concrete:
Surface gratings :

**202 Concrete**

Comply with AS 1379.
Concrete Strength: 20 MPa (unless otherwise shown on concrete drawings) at 28 days.
Admixtures: none, except at the approval of the project manager.

**203 Expansion Joints**

Fill expansion and construction joints with the following material:

**204 Equipment**

Provide and employ equipment required for satisfactory completion of the work.

## PART III EXECUTION

**301 Examination**

Inspect the site. Determine conditions and ensure that suitable conditions exist at the time of start of work of this section. Co-operate with other trades to prevent delay in job schedule.
Ensure that other trades will not be adversely affected by work of this trade.
Start of work means total acceptance of conditions.

**302 Records**

Where applicable, obtain essential services information (Dial Before You Dig).

**303 Preparation**

Remove surface material to required depth. Test compaction capacity of natural material. Fill soft spots with crushed rock to required compaction. Shape to falls indicated on drawings.
Allow for installation by other trades of drainage and other items.

**304 Kerbs and Channels**

Form and pour kerbs, gutters, combined kerbs and channels to the lines levels and profiles shown on drawings.

**305 Installation of Base Course**

Comply with state road construction authority, specification no.:
See clause 201 above or spread base course material in layers between 100 and 150mm thick. Compact to 100% of standard maximum dry density with minimum 10 tonne roller.
Employ a vibrating roller as necessary. Maintain damp condition of material until seal is applied. Employ 15 tonne roller for final compaction.

**306 Testing**

Allow for 3 separate compaction density tests to be conducted in random locations by a NATA approved testing organisation. Should tests prove unsatisfactory, repair the work and repeat tests to a satisfactory result without cost to the proprietor.

**307 Pavement Lines and Levels. Refer Clause 309**

Finish pavement to uniform surfaces and conform to the lines, grades and cross sections shown on the drawings, within the following limits:

A. Level: within 10 mm of levels shown on drawing.
B. Thickness: the thickness of the pavement: within the tolerance of +5, -10mm.
C. Shape: finished surface of the pavement course within 10mm either way from a 3 metre straight-edge laid parallel to the centre line of the pavement or from a template placed at right angles to the centre-line.
D. Install expansion and/or contraction material.

**308 In-Situ Concrete Pavements**

Form extents of pavement with sufficiently robust formwork to contain the concrete in fluid state without distortion during the placing and finishing stages.
Place concrete with approved equipment in suitable climatic conditions. Form straight and even expansion joints suitable to accommodate movement at appropriate spacings and between pavements and structure.
Screed/vibrate without delay, and finish true to established grades.
Thoroughly compact areas around kerbs, channels, pits to same density as other surfaces.
Vary thickness of concrete not more than 7mm from that indicated on drawings.
Replace low or defective areas immediately by cutting out and replacing with fresh concrete suitably keyed and compacted to conform to surrounding areas.
Form entire area so that it is free draining on completion.
The finished work is not to be less than 97% of laboratory tested specified density.

**309 Pavement Finish**

A. Road pavement: comply with state authority specification.
B. Pedestrian pavement: comply with AS 3727 and AS/NZS 3661.2.
Broom, medium, rough

Grooved
Patterned
Non-slip application
Other

**310 Lane Marking**

Comply with local authority requirements regarding sizes of parking bays and traffic control.
Mark pavement surface as instructed.
Comply with AS 4049.

**311 Cleaning**

Clean up leaving the whole pavement to the satisfaction of the project manager.

**312 Completion**

Complete contracted work in accordance with contract documents and written variation orders issued by the project manager.

**END OF SECTION**

## PART I GENERAL

**101 Scope**

Supply and install tactile warning surface material with necessary accessories required for the work.

**102 Related Work**

Co-ordinate and co-operate with the following trades:

| | |
|---|---|
| Concrete | Floor tiling |
| Carpet tiles | Other floor finishes |

**103 Quality Assurance**

Suppliers and installers need to be widely experienced in the class of work required for the work of this trade section. At a place selected by the project manager, construct a prototype of a completed installation 2 square metres in area. On completion of the prototype and approval by the project manager of aspects of the installation, the work remains in place and becomes the standard for the remaining work.

**104 References**

Comply with applicable portions of the following Australian Standards:

| | |
|---|---|
| AS 1428.4.1 2009 | Design for access and mobility – Means to assist the orientation of people with vision impairment - Tactile ground surface indicators. *Plus 1 Amdt, 2010.* |
| AS 1884 2012 | Floor coverings - Resilient sheet and tiles - Laying and maintenance practices. |
| AS/NZS 4586 2013 | Slip resistance classification of new pedestrian surface material. *Plus 1 Amdt, 2005.* |
| AS/NZS 4663 2004 | Slip resistance measurement of existing pedestrian surfaces. |
| HB 197 1999 | An introductory guide to the slip resistance of pedestrian surface materials. |

Comply also with instructions of manufacturers of materials to be installed.

**105 Submissions**

Provide samples and data sheets of materials.
Obtain project manager's approval for each item before ordering.

**106 Delivery, Handling and Storage**

Deliver materials in the packaging of the supplier, bearing the brand name, colour, thickness and other relevant data.
Store materials in a secure dry area away from other materials which may cause deterioration.

**107 Warranty**

Provide a warranty covering aspects of the installation performed by this trade, against defective materials and workmanship for a period of years from the date of Practical Completion. The warranty includes a statement that the whole of the work has been carried out in accordance with AS 1884 and the instructions of the manufacturers of components in effect at the time of installation.

## PART II MATERIALS

**201 Acceptable Manufacturer**

**202 Materials**

Warning of hazard indicators 600mm x 300mm tiles.
Colour: to be selected from range of 5.
Tactile indicators (direction of travel) 600 x 300mm tiles.
Colour: as above.
Refer drawings for locations and sizes of areas to be tiled.

**203 Equipment**

Supply equipment required for the preparation of floor, and installation of materials as recommended by the material manufacturer.

## PART III EXECUTION

**301 Examination**

Examine the site conditions applicable to each installation and comply with AS 1884.
Start of work means total acceptance of conditions.

**302 Preparation**

Prepare each area to be surfaced in accordance with AS 1884. Test the dryness of concrete sub-floor in accordance with AS 1884.

**303 Installation**

Comply throughout with manufacturer's current written instruction.

**304 Cleaning**

Remove excess adhesive and blemishes from the completed surfaces of flooring.

**305 Protection**

Apply suitable hardboard or plywood to completed floors and maintain in position until final cleaning prior to Practical Completion.

Remove and replace work which cannot be successfully repaired or cleaned.

**306 Completion**

Complete contracted work in accordance with contract documents and written variation orders issued by the project manager.

**END OF SECTION**

## PART I GENERAL

### 101 Scope

General: supply and install the complete unit masonry paving to areas indicated, including but not limited to the following:

A. Labour and materials.
B. Plant and equipment.
C. Cleaning.

Surplus units: in addition to needed paving units, supply the following spare units for the proprietor's future use in the amendment to or repair of the paving:

### 102 Related Work

Co-ordinate and co-operate with the following trades:

| | |
|---|---|
| Site preparation – Excavation | Sanitary sewerage |
| Storm drainage | Concrete pavement |
| Lawns and grasses | Exterior plants |

### 103 Quality Assurance

Provide assurance from the manufacturer that the paving units are of the nominated type and that they comply with:

Approved samples: before commencing laying, arrange with the project manager to designate a beginning section of paving as the control sample. Each section of at least 2 square metres in area which, when approved, becomes the control standard for remaining sections of the work. Include in each sample the required edge treatment of paved areas.

### 104 References

Comply with applicable portions of the following publications, including, as appropriate, the Australian Standards to which they refer:

| | |
|---|---|
| AS 1428 | Design for access and mobility.<br>1428.1 2009 General requirements for access – New building work.<br>*There are 5 other parts. 1992 – 2010.* |
| AS 2876 2000 | Concrete kerbs and channels (gutters) - Manually or machine placed. |
| AS/NZS 3661.2 | Slip resistance of pedestrian surfaces – Guide to the reduction of slip hazards. |
| AS 3727 1993 | Guide to residential pavements. |
| AS/NZS 4455.2 2010 | Masonry units, pavers, flags and segmental retaining wall units – Pavers and flags. |
| AS/NZS 4586 2013 | Slip resistance classification of new pedestrian surface material. *Plus 1 Amdt, 2005.* |
| HB 197 1999 | An introductory guide to the slip resistance of pedestrian surface materials. |

### 105 Submissions

Submissions required prior to delivery:

A. Name of proposed manufacturer of pavers.
B. 2 of each paver as described below.
C. Evidence of payment of any relevant fees.
D. Copies of minutes of pre-installation conference.

### 106 Delivery, Handling and Storage

Deliver and handle materials on site and store in suitable, convenient locations to ensure no damage, deterioration or contamination.

## PART II MATERIALS

### 201 Pavers (from Approved Manufacturers)

| **Pavers** | |
|---|---|
| **Clay Pavers A** | |
| General | |
| Type | 1,2,3 or 4 |
| Name | |
| Colour | |
| Size | |
| Special shapes | Same colour and manufacturer, [catalogue number] |
| **Clay Pavers B** | |
| General | |
| Type | 1,2,3 or 4 |
| Name | |

| | |
|---|---|
| **Pavers** | |
| Colour | |
| Size | |
| Special shapes | Same colour and manufacturer, [catalogue number] |
| **Concrete Pavers 1** | |
| Shape | Type A, B, C or X |
| Compressive strength | 30 or 40 MPa |
| 28 day Abrasion Index | 1.2, 1.5 or 2.0 |
| Name | |
| Colour | |
| Size | |
| Special shapes | Similar properties[catalogue number] |
| **Concrete Pavers 2** | |
| Shape | Type A, B, C or X |
| Compressive strength | 30 or 40 MPa |
| 28 day Abrasion Index | 1.2, 1.5 or 2.0 |
| Name | |
| Colour | |
| Size | |
| Special shapes | Similar properties[catalogue number] |

**202 Capping Layer, Sub-base and Roadbase/Basecourse Materials**

Comply with:

A. Capping layer:
Refer clause 104 above.

B. Sub-base:
Refer clause 104 above.

C. Roadbase:
Refer clause 104 above.

D. Basecourse:
Refer clause 104 above.

**203 Bedding Sand**

Comply with:
Design manual.

**204 Joint-Filling Sand**

Comply with:
Design manual.

**205 Edge Restraints**

Timber, concrete, masonry.

## PART III EXECUTION

**301 Examination**

Visit the site, inspect the conditions and compare them with the drawings.
Start of work means total acceptance of conditions.

**302 Records**

Obtain essential services information (Dial Before You Dig).

**303 Excavation**

Create the formation, maintain the sides and keep it free from water. Refer section 02315 SITE PREPARATION – EXCAVATION.

**304 Edge Restraints**

Install as detailed.

**305 Base Construction**

Spread, roll and consolidate in layers to create the required base courses to the thicknesses shown.

**306 Bedding Sand**

Spread and treat to create a bedding sand course to the thickness shown.

**307 Laying Pavers**

Lay to the patterns shown including needed trimming units at edges and against interruptions.
Comply with instructions in selected publications referred to in clause 104.

**308 Joint Filling and Vibrating**

Fill joints and vibrate to create an interlocked pavement.

**309 Extra Stock**

Retain at the site 0.5% of each different type of paver. Place these on the site in a location nominated by the project manager.

**310 Completion**

Complete contracted work in accordance with contract documents and written variation orders issued by the project manager.
Clean up and remove broken units, plant and the like, leaving the whole pavement in first class condition to the satisfaction of the project manager.

**END OF SECTION**

## PART I GENERAL

### 101 Scope

Supply materials and install an effective irrigation system to garden and lawn areas including but not limited to:
Pipework.
Fittings including timers.
Outlets.
Connection to main supply.

### 102 Related work

Co-ordinate and co-operate with the following trades:

| | |
|---|---|
| Site preparation – Excavation | Water distribution |
| Storm drainage | Lawns and grasses |
| Exterior plants | |

### 103 Quality Assurance

Contractor's qualifications: minimum 5 years' experience in similar work as required by the specification.
Submit evidence of completed similar work with contact names and telephone numbers.

### 104 References

Comply with applicable portions of the following Australian Standards:

| | | |
|---|---|---|
| AS/NZS 1477 2006 | PVC pipes and fittings for pressure applications. | |
| AS/NZS 2032 2006 | Installation of PVC pipe systems. *Plus 1 Amdt 2008.* | |
| AS 2698 | Plastic pipes and fittings for irrigation and rural applications. | |
| | 2698.2 2000 | Polyethylene rural pipe. |
| | 2698.3 1990 | Mechanical joint fittings for use with polyethylene micro-irrigation pipes. |
| AS/NZS 4455 | Masonry units, pavers, flags and segmental retaining wall units | |
| | 4455.1:2008 | Masonry units. |
| | 4455.3:2008 | Segmental retaining wall units. |
| AS 4678 2002 | Earth-retaining structures | |

### 105 Submissions

A.
B. Shop drawing: provide a shop drawing showing precise layout of every component of the system and the location of each.
Comply with Document 00800 clause 27, Shop Drawings.
C. Submit samples of each component for approval of the project manager before ordering material.

### 106 Project Conditions

Inspect drawings and visit site. Check aspects of required work and refer any discrepancy to builder and/or project manager, for decision.

### 107 Warranty and Maintenance

Maintain the system against faulty workmanship and materials for weeks after Practical Completion.
Replace any faulty component and restore to full operation at no cost to the proprietor.
Refer Part III.

## PART II MATERIALS

### 201 Materials

| Item | Detail |
|---|---|
| Pipes | UPVC<br>Sizes:<br>Each pipe to be marked with AS/NZS 1477 |
| Pipe jointing | Solvent cement<br>Over 65mm diam., rubber ring |
| Sleeve pipes under driveways and paving | 90mm Class 9 UPVC |
| Pipes within sleeves | 20mm copper or PVC |
| Gate valves | Size:<br>1 to each supply line of size to suit end of main supply line |
| Sprinkler risers | |
| Sprinkler heads | Compatible with delivery pressure of the main supply |
| Spray heads | |

| Item | Detail |
|---|---|
| Manual timers | |
| Protective boxes | 1 to each time and gate valve |

## PART III EXECUTION

### 301 Examination

Inspect site and compare conditions to those provided in specification and drawings.
Notify project manager of any discrepancy. Arrange with contractor for correction of any unsatisfactory condition.
Start of work means total acceptance of conditions.

### 302 Preparation

Co-ordinate with contractor responsible for site preparation, trade section 02315 SITE PREPARATION - EXCAVATION, then make final preparation before installation of materials.

### 303 Trenches And Excavations

Prior to excavation of trenches, obtain approval of pipe runs. Minor adjustment in the system's layout will be permitted to clear existing underground obstructions. Repair costs to services damaged are the responsibility of the contractor performing this work.
Excavate mainline trenches to a depth so as to allow a minimum of 400mm cover from the top of the pipe to the ground surface. Excavate trenches for lateral spraylines to a depth so as to allow a minimum of 300mm cover from the top of the pipe to the ground surface. Excavate trenches to sufficient width to permit proper handling and installation of the pipe and fittings.
Obtain approval prior to backfilling trenches. Pipes to be firmly and evenly supported with clean backfill material free of rubble, stones and rocks.
Where rock and stone is incurred during the excavation works, back fill material over the pipe to be clean, white packing sand free of organic matter. Place sand layer 75mm depth from the top of the pipe.
Place trench backfill material in at least 2 equal layers. Each layer to be wheel-rolled with a backhoe or other approved compaction equipment and crown completed backfill 30mm higher than the surrounding surface to allow further consolidation.
Where solid rock is encountered in trench excavation, request an inspection of the open trench prior to further trench excavation in that area.
Rock to be measured in the solid jointly by representatives of the landscape contractor and the landscape project manager within the confines of the excavation and within the limits shown on the drawings or specified prior to backfilling. No allowance will be made for overbreak.
The irrigation contractor is responsible for the erection of all necessary barriers and safety signs to make trench work safe from public pedestrian entry. Under no circumstances are trenches to remain either open or partially open over night.

### 304 Installing Pipes

Install sprinkler lines or mains with a minimum cover as specified above. Interior of pipes to be kept free from dirt and debris. Open ends of pipe to be closed by approved means during the laying process.
Use red priming fluid and blue dyed solvent cement to joints. Ensure that excess solvent is carefully wiped free of joints and keep joints dry for 24 hours minimum to allow solvent cement to dry. Turn on valves to each station to flush lines out with water before fitting spray heads.
Ensure that no pipe lengths will carry water at greater than 1.5 metres/second velocity.

### 305 Sleeve Pipes And Thrust Boring (By Builder)

Thrust bore a hole of sufficient diameter under driveways and paths shown on plan to allow for insertion of 90mm Class 9 PVC along entire width of pavement. Install top of PVC sleeve pipe 40mm below existing pavement level.

### 306 Valves

Inform landscape project manager of any proposed change made in supply and installation of master valve.
Allow for connection of pipework tees and junction elbows from the existing pipework out of the valve.

### 307 Sprinkler Risers

Install sprinklers on screwed 15mm schedule 80 PVC articulated risers. Set spray heads level with topsoil or at a level determined by the landscape project manager.
Securely brace the riser against vibration where the sprinkler head is in operation.
Flush out mains, laterals and risers with water before fitting sprinkler heads to risers.

### 308 Sprinkler Heads

Set sprinkler heads at dimension shown on plan. Set half circle sprinklers flush to edge of grass and garden or paving and grass or kerb.
Set sprinkler heads perpendicular to finished surfaces. Set heads at grade on shrub beds.
Discharge of water from sprinkler heads to be compatible to the pipe layout and delivery pressure of the main.
Refer to the Schedule which lists valve sprinkler types. Make adjustments for throw of individual spray heads

prior to commissioning of service and Practical Completion. Adjust sprinklers to give complete even coverage at completion of installation. Install the sprayheads as nominated on the schedule.

**309 Commissioning**

Be responsible for the testing and satisfactory performance of the complete irrigation system.

A. Static tests

Prior to commissioning ensure valve stations close satisfactorily.

Pipework and fittings to be tested to the satisfaction of the landscape project manager to ensure there are no water leaks in the system.

B. Commissioning procedure: give 48 hours' notice to the project manager.

1. Upon completion of the above static tests in the presence of the landscape project manager commission the system in accordance with the following procedure.
2. Open each valve to test sprinkler operation. During this procedure only 1 valve station is to be open at any 1 time.
3. Test sprinkler operation by continuous operation for a minimum of 15 minutes for each valve.
4. Upon satisfactory completion of the above procedures the complete system is to be continuously operated for a minimum of 1 hour.

**310 As-Built Drawing**

Provide landscape project manager with the instruction manual and a copy of as-built drawing when applying for the Certificate of Practical Completion.

Drawing to clearly show pipe sizes, valve types and locations, fittings and control cable routes. Clearly and accurately notate dimensions of pipes. The landscape contractor to be issued with A1 or B1 size base map transparency sheets by landscape project manager for use in the preparation of as-built drawings.

**311 Clean Site**

Upon completion of the contract, leave the site in a tidy condition, free from rubbish and surplus excavated materials to the satisfaction of the landscape project manager.

**312 Completion**

Complete contracted work in accordance with contract documents and written variation orders issued by the landscape project manager.

**END OF SECTION**

## PART I GENERAL

### 101 Scope

Supply and install wooden fences and gates including but not limited to:
Fence construction
Gate construction – NOTE: self-closing gate for swimming pool/external spa application.
Pickets
Hinges
Wire
Latches
Corrugated iron cladding.

### 102 Related Work

Co-ordinate and co-operate with the following trades:

| | |
|---|---|
| Concrete | Carpentry |
| Brickwork | Blockwork |
| Painting | |

### 103 Quality Assurance

Where applicable, survey pegging by licensed surveyor
Submit evidence of experience appropriate to the class of work requires. Install under the direct supervision of a capable foreman with a proven background in the trade.

### 104 References

| | | |
|---|---|---|
| AS 1926 | Swimming pool safety. *There are 3 more parts.* | |
| | 1926.1 2012 | Safety barriers for swimming pools. |
| | 1926.2 2007 | Location of safety barriers for swimming pools. *Amdt 2011* |
| AS 2820 1993 | Gate units for private swimming pools. | |

Technical Bulletin 8.1 Fences and gates, National Trust of Australia. Part 1 can be downloaded at Boroondara Council site at www.boroondara.vic.gov.au/your_council/building-planning/heritage/ref
Or visit www.nationaltrust.org.au for a list of National Trust retail locations.

### 105 Submissions

Where applicable, provide evidence of payment of relevant fees.

### 106 Delivery, Handling and Storage

Deliver, handle and store products so that damage, deterioration and loss will be prevented. Control delivery schedules to minimise long-term storage at site.
Store timber on site indoors, or above ground and cover with secure impervious material.

## PART II MATERIALS

### 201 Material Suppliers

### 202 Material

A. Concrete for post bases:
20 mpa concrete. Refer drawings for size of base.

B. Sole plates and struts
Jarrah, or redgum, mirboo or preservative treated timber.
Size:

C. Posts (fence)
Material:
Size:
Post (gate)
Material:
Size:

D. Plinth
Material:
Thickness:
Height:

E. Rails
Material:
Size:
Top rail material:
Size (double splayed):

F. Pickets
Material:
Size:

Shape at top:

G. Fastenings.
Galvanised nails
Galvanised screws

H. Bracing at corners
Material:
Size:

I. Railings
Material:
Size:

J. Woven wire panels
Material:
Source:
Type (name):
Finish:

K. Gates
Frame: Stiles

| Item | Material | Size |
|---|---|---|
| Bracing | | |
| Rails | | |
| Panels | | |
| Bottom rail | | |

L. Hinges:
Galvanised steel
Name:
Size:

M. Latch (bolt):
Material:
Type / name:
Finish:

## PART III EXECUTION

**301 Examination**
Visit the site and inspect conditions. Check dimensions and compare aspects with the drawings and specification. Resolve differences before ordering materials or starting work.
Start of work means total acceptance of conditions.

**302 Records**
Obtain essential services information (Dial Before You Dig).

**303 Preparation**
Consult with project manager or proprietor before clearing site of the work. Obtain instructions regarding removing or retaining plants or trees existing near the new work. Construct adequate protection for plants to be retained. Prevent damage to plants. Remove from the site material not required. Consult with neighbours and reach agreement on methods of construction and access to work areas.

**304 Installation**
Establish exact location of fences and gates to be installed.
Excavate for posts to required depths and in correct locations. Prepare post bases for installation with either sole plates and struts, or for setting in concrete.
Set posts vertical and backfill around base. Check out posts for rails use galvanised fasteners throughout.
Complete the installation as detailed.

**305 Hardware**
Install scheduled hardware for gates. Ensure correct location for latches, keepers etc. and test satisfactory operation on completion.

**306 Finishing and Cleaning**
Prepare each surface scheduled to be stained or painted. Remove matter which could prevent satisfactory painting.

**307 Completion**

Complete contracted work in accordance with contract documents and written variation orders issued by the project manager.

**END OF SECTION**

## PART I GENERAL

**101 Scope**

Supply, and install required furnishings including but not limited to:

**102 Related Work**

Co-ordinate and co-operate with the following trade sections:

| | |
|---|---|
| Site preparation – Excavation | Bituminous concrete pavement |
| Concrete pavement | Fences and gates |
| Concrete | Painting |

**103 Quality Assurance**

Work of this trade section will be performed by experienced craftsmen familiar with the quality required in this class of work.

Comply throughout with manufacturer's instructions.

**104 References**

Comply with applicable portions of the following Australian Standards:

| | |
|---|---|
| AS/NZS 1554 | Structural steel welding. *There are 7 parts, 2003 – 2012.* |
| AS 1627 | Metal finishing - Preparation and pre-treatment of surfaces.<br>1627.6 2003 Chemical conversion treatment of metals.<br>*There are 6 other parts, 1997 – 2005.* |
| AS 4100 1998 | Steel structures. *Plus 1 Supplement, 1999, 1 Amdt 2012.* |
| AS/NZS 4792 2006 | Hot-dip galvanized (zinc) coatings on ferrous hollow sections, applied by a continuous or a specialized process. |

Comply with requirements of statutory and local authorities.

**105 Shop Drawings**

Comply with DOCUMENT 00800 SUPPLEMENTARY CONDITIONS OF CONTRACT, clause 27.

Provide Shop Drawings for major items supplied hereunder.

A. Contract drawings and details provided are indicative as to general and minimum requirements, and do not show conditions.
   Develop details not shown and in conformity with the indicative details shown.
B. Take and confirm dimensions on site, before preparing shop drawings where possible.
C. Submit detailed Shop Drawings for fabrication and installation of major metalwork. Show plans, elevations and detailed sections; indicate materials, finishes, types of joinery, fasteners, anchorages and accessory items. Provide setting diagrams and full-scale templates of blocking, anchorages, sleeves and bolts installed by others.

**106 Submissions**

Where applicable, provide evidence of payment of relevant fees.

**107 Samples**

A. Sample welds: if requested, provide samples of weld types, including samples of railings joined at right angles and at typical acute angles, welded and ground smooth, for approval. If not acceptable, provide additional samples until approved. Approved samples establish quality of similar work of this trade section.
B. Check on delivery: request project manager to check materials on delivery to site for quality, and materials not meeting the requirements of this specification or equal to approved samples will be rejected.
   Return rejected materials to the fabricator at the fabricator's expense.
C. Finish: provide samples of specified finishes when requested.

## PART II MATERIALS

**201 Materials**

| Item | Manufacturer | Material | Size(s) | Model No. | Finish |
|---|---|---|---|---|---|
| | | | | | |
| | | | | | |

**202 Finish**

Materials exposed to weather maybe either:

A. Mild steel - hot dipped galvanised after fabrication or chromate pre-treated followed by polyester powder coating.
B. Internal steel.
C. Timber: refer section 09910 PAINTING.
D. Other material: comply with manufacturers' recommendations.

Finish internal steel after fabrication with zinc rich organic primer, or with inorganic zinc silicate paint.
Comply with relevant codes of practice or manufacturers' recommendations.

**203 Welding Steel**

General: details of joints, the techniques of welding employed, the appearance and quality of welds made and the methods used to correct defective work to conform to requirements of AS/NZS 1554, Part 1.
Welds exposed to view: grind smooth to project manager's approval.
Concealed welds: grind smooth before galvanising.
Tack or skip welding: at regular intervals, very neat; not permitted if material is to be hot dip galvanised.
Remove weld spatter.
Certification: only welders who have previously been qualified by tests may weld.

**204 Connection Design**

General: design fabricated items so that possible work is done before delivery. Fully protect for shipment.
Take possible care to prevent damage.

A. Welding external items: conform to the recommendations of AS/NZS 1554, noting particularly the design criteria.
B. Flanges: concealed where possible. Sleeve connecting railings inside railing sections and secure with flush or set screws. Except where access is impossible, connection screws and bolts will be on the underside of joints.
C. Fasteners on the top of railing sections will not be permitted.
D. Weld shop connections for steel fabrications, and bolt field connections.
E. Provide smooth finishes to exposed surfaces with sharp well-defined lines and arrises. Mill to a close fit machined joints. Design necessary lugs, brackets and similar items so that work can be assembled and installed in a neat, substantial manner.
F. Provide ample strength and stiffness by using appropriate metal thickness of assembly and supports.

**205 Miscellaneous**

A. Fasteners: provide required bolts, screws, inserts, fasteners, templates and other accessories required for a complete installation.
B. Co-ordinate with other trades as to the proper fastening systems suitable for the substrates to which the item is to be secured. Refer to project manager if in doubt.
C. Fasten galvanised items with galvanised fasteners.
D. Concrete bases: refer trade section 03310 CONCRETE.

## PART III EXECUTION

**301 Examination**

Inspect site conditions before fabrication, where possible, and before delivery of materials. Ensure conditions are satisfactory for installation. Arrange for rectification required.
Start of work means total acceptance of relevant conditions.

**302 Records**

Obtain essential services information (Dial Before You Dig).

**303 Preparation**

Co-ordination with work of others: provide to each relevant trade foreman anchorages and drawings, diagrams, templates and instructions for installation of items having integral anchors which are to be embedded in concrete or masonry construction. Co-ordinate delivery of such items to the project site.

**304 Inspection and Reinstatement**

A. Check fabrications as they are unloaded at the project site for evidence of physical damage.
If damaged, return to shop for repair or replacement.
B. Verify anchors, bolts and other required anchorage items for proper size and accurate location prior to erection.

**305 Installation**

A. Anchorage: except for anchorages furnished herein but placed by other trades, set and secure necessary anchorages, including concrete and masonry inserts, bolts, wood screws and other connectors as needed. Perform cutting, drilling and fitting as needed, locating anchorages and holes to ensure proper positioning of completed work.
B. Fit: during installation and assembly, form tight joints with exposed connections accurately fitted, and reveals uniform. Finish work accurately, plumb, level, square and true in reference to adjacent construction. Make tolerances conform to Australian Standards.
C. Finish: do not cut or abrade shop finishes which cannot be completely restored in the field.
The use of gas-cutting torch in the field for correcting fabrication errors will not be permitted.
Fabrications may be cut shorter with power hacksaws on site.
Isolate dissimilar metals likely to be subject to moisture with inert materials, not visible on completion of installation.
D. Sharp edges: carefully remove sharp edges, corners of other material which can damage skin.

**306 Field Quality Control**

Where considered necessary by the project manager, arrange for the manufacturer of products to instruct installers regarding correct installation.

**307 Protection**

Cover Work: immediately following installation, wrap or cover architectural metalwork to avoid wear and tear of finish during subsequent construction.

**308 Cleaning**

Clean materials installed to the satisfaction of the project manager.
Remove temporary protective coatings.

**309 Completion**

Complete contracted work in accordance with contract documents and written variation orders issued by the project manager.

**END OF SECTION**

## PART I GENERAL

**101 Scope**

Provide and install plants and grassing in compliance with the requirements of the local authority, including but not limited to:
Trees.
Shrubs.
Plants.
Ground cover plants.
Fertiliser.
Mulch.
Stakes.

**102 Related Work**

Co-ordinate and co-operate with the following trades:
Site preparation – Excavation Irrigation systems
Lawns and grasses

**103 Quality Assurance**

Contractor qualifications: minimum 5 years' experience in similar work as required by this specification. Submit evidence of completed similar work with contact names and telephone numbers.

**104 Submissions**

Evidence of payment of relevant fees where applicable.
Submit data on sources of plant materials and manufacturers of other components.
Submit to project manager maintenance instructions for plant and other materials required by this specification.

**105 Delivery, Handling and Storage**

Arrange with builder for dates of delivery and installation of specified materials, completion of installation and maintenance arrangements. Move carefully. Minimise damage to plants.

**106 Project Conditions**

Inspect drawings and visit site. Check aspects of required work and refer any discrepancy to builder and/or project manager, for decision.

**107 Warranty**

Provide a warranty to the proprietor via the project manager that materials which fail within a period of year(s) from the date of Practical Completion will be replaced without cost providing maintenance is carried out as contracted, where maintenance is not performed by this contractor.

**108 Maintenance**

Provide an agreement form to be submitted to the project manager detailing those plants and other material for which maintenance will be undertaken and the period involved.

## PART II MATERIALS

**201 Material Suppliers**

Submit for approval names of suppliers of materials and manufactured items.

**202 Materials Table**

| Name | Pot | Size | Height | Spacing | Quantity |
|---|---|---|---|---|---|
| Trees, deciduous | | | | | |
| Trees, evergreen | | | | | |
| Shrubs | | | | | |
| Ground covers | | | | | |

**203 Grasses and Mulch**

| Item | Type | Total Sq. Metres |
|---|---|---|
| Grass | | |
| Grass | | |
| Fertiliser | | |

| Item | Type | Total Sq. Metres |
|---|---|---|
| Mulch | | Average depth:<br>Maximum size of particles: |

**204 Stakes**

Stakes:Timber: 38 X 38mm or 50X 50mm
Ties: Refer Clause 306

## PART III EXECUTION

**301 Examination**

Inspect site conditions, comparing conditions to drawings, before delivery of materials of performing required work. Start of work means total acceptance of conditions.

**302 Records**

Obtain essential services information (Dial Before You Dig).

**303 Preparation**

Prepare live materials in advance of installation to ensure satisfactory performance and growth rate after planting and/or placement at project site.
Co-ordinate with other trades to prevent delays.
Do not plant materials if soil is very wet or waterlogged or during extreme weather conditions, very hot, very cold, or very windy.

**304 Planting Procedure, Shrubs and Ground Cover**

Thoroughly soak the plant before planting.

A. Clear mulch 500 - 1000mm around hole for replacement after planting.
B. Over excavate each plant hole by at least twice the pot diameter and pot height.
C. If the soil is very dry, fill with water and allow to drain completely.
D. Fertilise at the rates recommended by manufacturer:
E. Place the fertiliser in the bottom of the hole and cover with soil to ensure there is no contact between the roots and fertiliser. PROVIDE A SCHEDULE OF FERTILISER RATES.
F. Place the plant into the hole and backfill with approved garden soil free from weeds, stones, clods of sub soil and other extraneous matter.
G. Set plants plumb and level with the adjacent soil - ensure no soil is placed against the stem of the root crown.
H. Form a "bowl" around the plant to hold at least 10 litres of water.
I. Remove the plant label from the trunk of the plant. Tie to the stake (if available) or leave visible in the adjacent earth.

**305 Advanced Trees**

A. Plant sizes: refer Planting Table for open rooted stock size. Not less than 2000mm high with root spread from 600mm - 1000mm depending on the trees height.
   Pot grown plants are to be 600mm or 900mm diameter container and be 3000 - 4000mm minimum height.
B. Handling: plants with bare roots ("open rooted stock"): protected from drying out by "healing in" i.e. roots are to be covered with mulch or good quality top soil and kept moist prior to planting by frequent watering.
   Plants with a root ball may have their roots partially exposed to facilitate handling. Handling of the large container grown plants may only be done with a tree trailer and they are to be removed from the nursery and planted in a prepared hole in one operation.
C. Planting Procedure:
   1. Thoroughly moisten plant roots before planting and soak all container grown stock.
   2. Dig hole of sufficient size, with domed bottom to take root ball without restricting the root diameter. Minimum diameter 600mm.
   3. If the soil is very dry fill with water and allow to drain completely.
   4. Cut back any roots that may have been damaged to healthy tissue.
   5. Fertilise at the rates recommended by the manufacturer (advanced deciduous trees):
      Place fertiliser in the bottom of the hole and cover with soil to ensure no contact between roots and fertiliser.
   6. Planting: spread roots of open stock evenly in the hole. Do not bend tree roots to fit the hole. Place the tree into the hole to match level as it is grown in the nursery. Place by tree trailer for advanced container grown stock.
   7. Staking: allow to provide 3 hardwood stakes (50 X 50mm) per advanced tree, set a minimum of 450mm apart to avoid root damage. Use approved "webbing" type flexible monitor tree stability in prevailing winds before staking advanced trees.
   8. Gently cover the roots with approved garden soil in layers of 150mm and compacted around the perimeter of the hole with the foot to ensure no air pockets and root ends bend downwards.

Ensure roots are not pressed against bottom of hole. Do not back-fill too quickly or use lumpy soil.

9. Firm the soil gently with the foot to a level approximately 30mm below the surrounding soiled surface level to create "watering bowl."

**306 Organic Mulch**

Note: red gum mulch is not to be used.
After the placement and planting out of the plant material in all garden beds, supply and spread pine mulch to an average depth of 75mm (+/- 10mm). The mulch particle sizes are to be hammer-milled to a maximum of 20mm in any dimension to a minimum of 10mm, with an average of 15mm. Supply mulch free from soil clods, rocks and all other non-organic matter.
A sample is to be approved by the landscape project manager prior to supply and delivery to the site.
Mulch to finish level with timber plinths after settlement allowances of the top soil and mulch. In garden areas respread mulch over disturbed bed area. Keep mulch away from the trunks to avoid rotting at ground level.
In lawn areas place mulch after formation of the 'water bowl.'
Where the toe of a batter coincides with the edge of the garden, dig a 20mm wide x 150mm deep trench along the inside edge of the garden and back fill with mulch.

**307 Staking And Tying trees**

Stake evergreen trees with 2 No. 1800 x 38 x 38mm HW stakes driven 600mm into the ground.
Stake deciduous trees with 2 No. 2400 x 50 x 50mm HW stakes driven 600mm into the ground.
Tie trees to stake using "figure eight" ties of flexible rubber or canvas or approved equivalent.

**308 Watering**

Thoroughly water plants immediately after planting and at such times during the contract period as is required to maintain growth free from water stress. Each plant will require a minimum of 10 litres of water at the time of planting.

**309 Maintenance And Establishment**

A. General

Establish and maintain the works for a period of 13 weeks during which made good defects after the issue of the Certificate of Practical Completion by the landscape project manager.
Maintain horticultural practices, as well as rectifying defects that become apparent in the works under normal use including, but not limited to, the following items where required:
Watering
Mowing
Fertilising
Weeding
Reseeding
Pest and disease control
Staking
Replanting
Cultivation
Pruning
Aerating
Renovating
Top dressing
Maintaining site neat and tidy

B. Malicious unlawful damage

Rectify plants which are damaged or destroyed unlawfully by others during the Defects Liability Period.
Rectification includes replacement of stolen or severely damaged material with the proviso that the contractor's liability within the context of this clause is to be limited to the replacement once only of any individual plant or area of grass, the contractor being absolved of liability for any malicious destruction of the replacement.
Report such malicious damage to the project manager who will inspect the damage prior to replacement.
Immediately after the contractor has carried out the replacement request a further inspection and written approval of the replacement. Show such replacements on a site plan which is updated with each amendment duly authorised by the project manager.

C. Commencement of maintenance and establishment

Give the landscape project manager 7 days' notice that the works are practically complete for commencement of maintenance/establishment period. The landscape project manager will inspect the works . If any defects or deficiencies are found, rectify within 14 days.

D. Protection

Protect grassed and planted areas from damage, either malicious, irresponsible or accidental.

E. Mulched surfaces

Maintain mulched surfaces in a clean and tidy condition and reinstate if necessary.

F. Spraying

Spray against insect and fungus infestation if considered necessary by the landscape project manager in accordance with the manufacturer's directions.

G. Planted areas

Throughout the duration of the contract maintain in one of the following manners:

1. Individual trees or shrubs - a week free watering saucer of minimum diameter of 1m except in irrigated lawn areas.
2. Planting beds - completely weed free surface within the surrounds of the bed.
3. Mass planting areas - a completely cultivated surface (including cross cultivation) with a weed free watering saucer of minimum diameter of 500mm.

H. Grass areas
Refer section 02920 LAWNS AND GRASSES.

I. Watering
Grass, trees and garden bed areas are to be watered regularly so as to ensure continuous healthy growth. The minimum acceptable requirement for grass areas is 25mm of natural rainfall or its applied equivalent.

J. Weeding and rubbish removal.
Remove rubbish and weed growth that may recur throughout the contract area, at weekly intervals, and maintain in a completely clean and tidy condition.

K. Replacements
Replace at no cost to the proprietor plants and turf that are missing, unhealthy or dead, with replacements of a similar size and quality and identical species or variety to the plant which has failed.

L. Soil subsidence
Make good soil subsidence or erosion which may occur after the soil filing and preparation operations.

M. Tree ties
Tie trees to stakes as "figure 8" pattern. Refer clause 307.

N. Pruning
Trees and shrubs as directed by the landscape project manager. Pruning will be directed for the maintenance and dense foliage or miscellaneous pruning as beneficial to the condition of the plants. Prune damaged growth.

O. Insurance
The landscape contractor is advised to ensure adequate insurance to cover his work during the maintenance and establishment period.

**310 Completion**

Complete contracted work in accordance with contract documents and written variation orders issued by the project manager.

**END OF SECTION**

## PART I GENERAL

### 101 Scope

Supply and install a complete installation of concrete including but not limited to reinforcement, damp-proof membrane, formwork and other items for:
Footings
Slabs
Walls
Columns
Ramps
etc. and as detailed herein and on drawings, and other incidental or consequential work which is or may become necessary to complete the work, including waterstops and other jointing devices.

### 102 Related Work

Co-ordinate and co-operate with the following trades:

| | |
|---|---|
| Site preparation – Excavation | Structural steel |
| Concrete screeds | Concrete finishes |
| Coloured concrete flooring | Waterproofing and tanking |

### 103 Quality Assurance

Supply and install required materials in compliance with drawings and specifications which form part of this contract and with further details and/or instructions issued during the currency of the contract.
The concreter is to be experienced in this class of work with an appropriately qualified foreman to supervise requirements.

### 104 References

Comply with the requirements of the following Australian Standards and maintain the ones marked with * on site during construction:

| | | | |
|---|---|---|---|
| AS 1379 2007 | Specification and supply of concrete. *Plus Supplement 1-2008.* | | |
| | 1554.2:2003 | Stud welding (steel studs to steel) *Plus 1 Amdt 2003*. | |
| | 1554.3:2008 | Welding of reinforcing steel. | |
| | 1554.4:2010 | Welding of high strength quenched and tempered steels. | |
| | 1554.5:2011 | Welding of steel structures subject to high levels of fatigue loading. | |
| | 1554.6:2012 | Welding stainless steels for structural purposes. | |
| | 1554.7:2006 | Welding of sheet steel structures. | |
| AS 1428 | Design for access and mobility. | | |
| | 1428.1 2009 | General requirements for access – New building work. | |
| | *There are 5 other parts. 1992 – 2010.* | | |
| AS 2550.15 1994 | Cranes - Safe use - Concrete placing equipment. | | |
| AS 2870 2011 | Residential slabs and footings - Construction. | | |
| AS 3600 2009 | Concrete structures*. Plus 2 Amdts, 2010, 2013.* | | |
| AS 3610.1 2010 | Formwork for concrete – Documentation and surface finish. | | |
| AS 3799 1998 | Liquid membrane-forming curing compounds for concrete. | | |
| AS 3972 2010 | General purpose and blended cements*.* | | |
| AS/NZS 4200 | Pliable building membranes and underlays. | | |
| | 4200.1 1994 | Materials. *Plus 1 Amdt 1994.* | |
| | 4200.2 1994 | Installation requirements. | |
| AS/NZS 4671 2001 | Steel reinforcing materials. *Plus 1 Amdt, 2003.* | | |
| CIA Z6 2010 | Reinforcement detailing handbook. | | |
| HB 71 2011 | Reinforced concrete design in accordance with AS 3600 2009. | | |
| HB 84 2006 | Guide to concrete repair and protection. | | |

### 105 Submissions

Submissions required prior to fabrication:

A. Builder's proposed Progress Schedule: include as a minimum, in bar chart form, the anticipated commencement and completion times of each major element, such as:
   1. Fabrication of formwork and reinforcing.
   2. Placing of concrete.
   3. Stripping of formwork.

B. Product data including technical sheets, manufacturer's preparation and application recommendations of both formwork and reinforcing.

C. Performance criteria: provide 2 copies of each of the following:
   Waterstops and other accessories: submit manufacturer's product specifications, handling, installation and performance test data sheets for each product required.

D. Shop Drawings: comply with the requirements of DOCUMENT 00800 SUPPLEMENTARY CONDITIONS OF CONTRACT, clause 27 Shop Drawings. Provide the Shop Drawings showing the following information where appropriate to the item:

1. Layout of formwork and reinforcing (sectional plan and elevation) of complete assemblies.
2. Methods of assembly of formwork and reinforcing.
3. Methods of installation, including fixings, anchorage, caulking, flashings.
4. Junctions and trim to adjoining surfaces.

**106 Delivery and Handling**

Deliver materials in the same sequence as they are installed. Avoid double handling at the site. Co-ordinate delivery and fixing schedules to reduce use of cranes.

**107 Project Conditions**

A. General:

B. Measurements and Dimensions.

1. Measurements: before ordering material or doing work, verify measurements and be responsible for the correctness of same. Submit differences found to the project manager in writing for consideration before proceeding with the work. No extra charge or compensation will be allowed on account of difference between actual dimensions and the dimensions indicated on the drawings.
2. Where dimensions are given and marked "verify" or "verify in field", correct before submitting Shop Drawings. Where field conditions do not yet exist for taking or confirming of field dimensions, note Shop Drawings with "dimensions will be verified in field", before submitting.

C. Be wholly responsible for protecting the work and the materials stored on the site. Take required measures to protect the work at times against fire, storm, theft, vandalism and other losses.

**108 Warranty**

Forward to the project manager a statement guaranteeing that the concrete complies with the approved mix design and attains the stated guaranteed strengths in days.

## PART II MATERIALS

**201 Formwork**

A. Formwork classes: comply with AS 3610.1 2010, Table 3.2.1, Formwork for concrete and as follows:

1. Class 1 formwork for concrete surfaces visually of the highest attainable quality, best uniformity of texture. Excellent quality of edge and joint details.
2. Class 2 formwork for concrete with uniform quality and texture over large areas. Built to close tolerances. Consistently good quality of edge and joint details.
3. Class 3 formwork for concrete surfaces to be painted and concrete surfaces not otherwise specified or shown on the drawings. Good visual quality when viewed as a whole.
4. Class 4 formwork for concrete surfaces to be rendered, tiled or concealed by other finishes and concrete surfaces permanently concealed in ducts, shafts and above false ceilings. Texture not important. Good general alignment.
5. Class 5 formwork for footings, concrete surfaces in the ground and rear surfaces of retaining walls, piers, etc. Alignment and texture not important.

B. Formwork materials: approved timber, plywood or pre-cast concrete.

**202 Reinforcement**

A. General

All reinforcement: supplied, fabricated and fixed in accordance with the drawings and this specification.
Refer discrepancies to the engineer for decision before proceeding with the work.
Be solely responsible for the supply, fabrication and placing of reinforcing steel.
Remove reinforcement which does not comply with the requirements of this specification and replace to the satisfaction of the engineer.
Comply with Australian Standards as follows: AS 3600 and AS/NZS 4671.

B. Surface condition

Ensure that reinforcing is free from loose mill scale, rust, mud, oil, grease or other non-metallic coatings which would reduce the bond between the concrete and steel and is free from kinks or other defects, at the time of placing concrete.
When there is a delay between placing the reinforcement and pouring the concrete, the engineer may require the builder to restore the reinforcement to a condition satisfactory to receive concrete.

**203 Concrete**

A. Cement: comply with AS 3972. Provide cement of 1 brand which has passed the standard tests not more than 3 months prior to use.
If not delivered as a component of ready-mixed concrete, deliver cement to the site in branded and sealed bags stacked under protective covers to prevent deterioration, so stacked that each batch delivered may be identified.
Remove from the site cement that does not comply with these standards or has been adversely affected in storage.

B. Aggregate:
Maximum size of coarse aggregate: comply with AS 3600 and drawings.

C. Water: water is to comply with AS 3600.

D. Admixtures: none, except with prior approval of the engineer in writing.
If admixtures are used, comply with AS 3600.

E. Ready-mixed concrete: grey ready-mixed concrete except areas as specified below, supplied by an approved manufacturer and mixed and delivered in accordance with the requirements of AS 1379.
Site-mixed concrete: subject to prior written approval of the engineer.

F. Concrete strength: comply with stated compressive strengths at 28 days as noted or scheduled on structural drawings for various locations.
If not scheduled, provide 20MPa concrete.

G. Waterproofing: add mixture. Refer section 07130 WATERPROOFING AND TANKING, System Type D.

**204 Form Liners**

**205 Steel Welded Fitments in Concrete**

Comply with engineer's requirements. Provide Shop Drawings. Comply in all respects with appropriate Australian Standards.
In addition, fabricated samples of each element may be required to be delivered to site and approved by the engineer before proceeding to fabricate the various production runs of the elements.

**206 Fabrication of Reinforcement**

A. Fabricate, bend and weld in accordance with the standards laid down in AS 3600, the drawings, the requirements of this specification and to the satisfaction of the engineer.
   1. Where possible, bend steel prior to delivery, and always bend under heat.

B. Do not bend or straighten in a manner which will damage the steel.

C. Do not bend again a deformed bar of structural grade steel or cold work steel which has been bent and subsequently straightened or bent in the reverse direction within 20 bar diameters of the previous bend.

D. Supply necessary support and spacer bar, though not necessarily shown on the drawings, to the satisfaction of the engineer.
   1. Unless otherwise shown, support top reinforcement with 12mm diameter support bars at 300mm centres on bar chairs at 1000mm centres.

E. Paint ends of bars which are to be left projecting for longer than 3 days with a heavy coat of neat cement grout.

F. Cover concrete reinforcement as shown on the drawings to tolerances in accordance with AS 3600.

G. Tie wire: annealed iron wire not less than No. 16 gauge, or other approved fasteners, unless shown otherwise on the drawings. With the approval of the engineer, spot welding by the electric arc process may be used in lieu of the wire for selected locations.

H. Welding (including spot welding) of hard grade bars is not permitted.

I. Reinforcement from section of concrete which has been demolished and removed may only be re-used after inspection and approval by the engineer.

**207 Bolts, Waterstops, etc.**

Submit selected items to engineer for approval before ordering.

**208 Waterproof Membrane**

The supply and installation of the polymeric membrane is described in trade section 02315 SITE PREPARATION, clauses 203, 311 and 312.

## PART III EXECUTION

**301 Inspections**

Where applicable, obtain essential services information (Dial Before You Dig).

A. Examine ground condition upon which form props are placed. Be responsible for prop placement.

B. The concrete works will be particularly inspected by the engineer at the stages as follows:
   1. After erection of formwork and before placing reinforcement.
   2. After placing of waterproof of membrane.
   3. After cores and embedments have been placed in the formwork.
   4. Immediately before each pour of concrete is commenced.

C. Be responsible for the formwork and the quality of the stripped concrete.

D. Keep records of each pour of concrete showing the following:
   1. Details and types of reinforcing steel.
   2. Date of pouring concrete.
   3. Area of structure where concrete placed.
   4. Area of structure where tests taken.
   5. Test results when available.
   6. Make these records available for inspection by the engineer.

E. Start of work means total acceptance of conditions.

**302 Formwork Generally**

A. Conform to the shape, lines, grades and dimensions of concrete as required by the drawing and construct of approved pre-cast concrete, timber or metal, in which bolts and screws in contact with concrete are countersunk. Provide sufficient strength to the structure to carry the concrete without

deflection. Tolerances of the concrete when stripped: in accordance with the appropriate clause of AS 3610.1.

B. Be responsible for complete installation of formwork and for the condition of concrete after stripping.

**303 Maximum Height Of Wall Forms**

Arrange formwork so that maximum height through which concrete falls within the formwork does not exceed 2700mm for 230mm walls and thicker, 1800mm for walls 150mm thick or less, and in proportion for thickness between 150mm and 230mm.

Form openings at 1800mm horizontal spacing and tremmie pipes may be used. Pour concrete no higher than at least 150mm below the top of at least 1 of the side forms.

**304 Fixing Reinforcement**

A. Unless otherwise shown on the drawings or directed by the engineer, measurements made in placing the reinforcement are to be to the centre-lines of the reinforcement.

B. Support and wire together reinforcement with a 0.5mm soft wire ties or clips, or tack weld in accordance with AS/NZS 1554, to prevent displacement by construction loads.

C. Use plastic-tipped metal chairs, metal hangers, metal spacers and other plastic, metal or concrete accessories as required for supporting reinforcement in accordance with the following:
Where the concrete surface is off form and exposed to view, internally or externally, provide accessories in which the portions in contact with the formwork are of plastic matching in colour the concrete paste.
Where the concrete surfaces are to be sandblasted, internally or externally, use only plastic or concrete accessories, matched in colour with the concrete paste, where in contact with the formwork.

D. Weld, tie, clip or otherwise secure mesh reinforcement together by approved means at alternate intersections and at such other points as may be required.

E. If necessary, support footing reinforcement on concrete blocks of adequate strength and size not to split under the loads they are required to carry.
Take particular care to ensure that wall and column steel is properly fixed in position by the use of plastic chairs clipped on to the steel and by steel spacers for wall reinforcement. Place such spacers in position prior to erecting the last shutter.

F. Splices on reinforcement: splice only at locations approved by the engineer, with minimum lap lengths as shown on the drawings or welded to develop the full strength of the small bar in accordance with AS/NZS 1554.3

G. Cover to reinforcement: allow clear minimum cover to reinforcing as shown on the drawings. Maintain this cover during concreting.

**305 Construction Joints**

Periods of stoppage in concrete of 3/4 hour or more are deemed to be construction joints.

When the location and type of construction joints are not shown on the drawings, submit proposed location and detail of construction joints to the engineer for his approval prior to the start of formwork placement. Site engineer will direct treatment before depositing the new concrete against a construction joint.

**306 Bonding Fresh and Hardened Concrete**

Before depositing new concrete on or against concrete which has set, re-tighten forms, roughen the set concrete surface, clean off foreign matter and laitance and thoroughly wet to engineer's approval. Remove excess water, cover the cleaned and wetted surfaces with a coating of 1:2 cement/mortar. Place the new concrete against this before the mortar has attained its initial set. Prior to placing concrete, submit a sample of concrete showing the degree of roughened and laitance removal proposed. The following procedures for preparation of construction joint faces are approved:

Vertical joints: paint face of form with an approved retarder. Strip form the following day and remove retarded concrete with air-water jet to bare exposed aggregate face.

Horizontal joints: spread 6mm bluestone chips on surface of freshly screeded concrete and blow off excess the following day with air-water jet.

Comply with instructions on engineer's drawings.

**307 Building In**

A. Conduits and piping: place conduits and piping in concrete floors above the bottom steel and below the top steel. Do not dislodge reinforcement.
Where conduits and piping cross control joints, make provision for clip joints or some other means of absorbing movement without fracturing.

B. Built-in bolts, etc.: accurately build in bolts, lugs and other fittings, provide holes and pockets as shown on the drawings. Prevent movement of these items during concrete pour.
Clear screwed or machined portions of fittings of mortar and grease.
Temporarily fill voids in sleeves, inserts and anchor slots and readily removable materials to prevent the entry of concrete into the voids.

C. Waterstop: cast in waterstop as shown on the drawings, located in vertical wall joints or floor joints by the use of split shuttering or other means.
Use waterstop in the maximum possible lengths, mitre at corners and shop weld and seal at joints.
Make joints other than at changes of direction, in location approved by the engineer.
Adequately secure and support in the correct position during placing concrete.

D. Grouting: attention is directed to the 05100 STRUCTURAL STEEL section of this specification.

**308 Preparation for Placing of Concrete**

A. Immediately before placing concrete in excavation, ensure that the excavation is free from water and fallen materials and that the sides of excavations are such that no material will fall into freshly placed concrete.

B. Ensure that formwork ready for the placing of concrete is complete, with surfaces smooth and clean, immediately before placing, remove excess water, mud and debris and secure reinforcement in place, remove surplus end of tie-twine, surplus nails and other extraneous metal objects in contact with the forms, make sure that expansion joint material, anchors, and other embedded items are in position. Give the engineer 1 working day's notice of the intention to pour so that approval may be given in time.

**309 Access and Inspection Openings**

Provide temporary openings at the base of the column and wall forms and at other points where necessary to facilitate cleaning and inspection. Intermediate openings for placing may be required by the engineer.

**310 Transporting of Concrete**

Convey concrete from the mixer to the place of final position without delay and by means that will prevent segregation and loss of materials.

Where necessary, transport concrete on substantial gangways or barrow runs supported on stools clear of reinforcement.

Remove hardened concrete and foreign materials from the inner surfaces of the conveying equipment.

**311 Placing of Concrete**

Place concrete in compliance with AS 3600.

**312 Concrete Testing**

A. Generally: perform concrete tests in accordance with AS 1012 or subsequent amendment.
Allow for the cost of making test specimens and for the supply of testing equipment and suitable personnel to carry out tests.

B. Materials testing: submit in writing, test certificates from an independent laboratory registered with the NATA as evidence that materials used comply with the requirements specified. Allow the costs of such tests as required.

C. Slump tests: provide slump tests reports on the first batch of concrete to be placed and at least once for every 20 cubic metres of concrete placed thereafter on that day.
If, in the opinion of the engineer, other batch of concrete appears to have an incorrect slump, conduct slump tests as directed by the engineer.
Slump tests are to be conducted by, and at the expense of the builder. Concrete will be considered as complying with the specified slump tests when it complies with AS 3600.

D. Compression tests: the methods and frequency of sampling and the identification and testing of cylinders are to be in accordance with project control testing AS 3600.

E. Acceptance and rejection of concrete: acceptance and rejection of compressive strength of concrete by the engineer will be in accordance with AS 3600.

**313 Compaction of Concrete**

A. Compact concrete by mechanical vibration to the maximum practicable density, free of air or stone pockets. Concrete not vibrated will be rejected.

B. Have on site sufficient vibrators of an approved pattern and keep 1 spare vibrator to every 2 active vibrators.

C. To avoid segregation, place concrete in position and then vibrate. "Travelling" concrete by use of vibrators is likely to produce segregation and is not permitted.
Operate immersion type vibrators in a near-vertical position and insert and withdraw them slowly. Allow them to penetrate and revibrate the concrete in the upper portion of the underlying layer.

D. Do not leave vibrators, when in action, lying unattended on formwork, reinforcing or in concrete. Keep vibrator heads clean and free of mud or other deleterious matter when inserted into the concrete.

E. Vibrate concrete in layers not exceeding 450mm in thickness and avoid contact of the vibrating head with surfaces of the forms.

**314 Floor Finishes**

Finish floor slabs monolithically with steel trowel, or as detailed on drawings or on Schedule of Finishes.

**315 Curing and Protecting Concrete**

A. Protect freshly cast concrete from premature drying and excessively hot or cold temperatures. Erect windbreaks to shield the concrete surface during and after placing. Maintain the concrete at a reasonably constant temperature with minimum moisture loss for the curing period, refer AS 3600. Take responsibility for the curing and protection of the concrete.

B. Cure as soon as the surface of the concrete has hardened sufficiently to prevent damage but in no case later than 2 hours after the finishing operation has been completed.
   1. Cure by the following means:
   2. The use of waterproof paper, or
   3. The use of an approved polyethylene building film.

   The use of other approved moisture retaining covering.

If a method other than polyethylene film is adopted, secure the covering material against the concrete for the full length of edges and laps and at frequent intervals between so that no air circulation at the concrete surfaces occurs.

C. Period of curing: continue final curing for 7 days for normal Portland Cement concrete.
For high early strength concrete, continue the final curing for 3 days.
Prevent rapid drying out at the end of the curing period.
Keep wet steel forms heated by the sun and wood forms in contact with the concrete during the final curing period.

D. Temperature: when the mean temperature of the air during curing is less than 5ºC, maintain the temperature of the concrete between 10ºC and 20ºC for the required curing period.
Where necessary, make arrangements to maintain this temperature in advance of concreting adequate for the purpose.
When the mean temperature of the air is in excess of 30ºC during curing and moist curing is not employed, cover the surface with an approved heat reflecting plastic membrane. Apply this treatment for the whole of the curing period.

E. Curing off-form concrete: take special care with curing off-form concrete to avoid differences in colour.
Prevent rapid or localised drying-out during the first 7 days after pouring. Maintain the form face in contact with the concrete up to the moment of striking. Programme stripping times to ensure that surfaces throughout the job are exposed at similar ages, differing by not more than 4 and preferably 2 or less hours.
Ponding is preferable for horizontal surfaces. Use heavyweight covers, well secured and in continuous contact.
Apply curing compounds generously if used, to prevent local moisture loss.

**316 Stripping of Formwork**

Strip formwork in accordance with the recommendations of AS 3610.1, Table: "Recommended Minimum Stripping Times". If construction loads greater than the live load shown on the drawings are placed on the structure, fix emergency shoring and tomming to the satisfaction of the engineer.

**317 Cleaning**

Remove debris and form work from each area after stripping concrete as work sections are completed.
Leave each area clean to the satisfaction of the project manager/engineer.

**318 Completion**

Complete contracted work in accordance with contract documents and written variation orders issued by the project manager.

**END OF SECTION**

## PART I GENERAL

### 101 Scope

Supply and install a complete installation of autoclaved aerated concrete panels, including, but not limited to all panels, inserts, panel erection, joint sealers and all accessories.
Provide all related services including transport, hoisting and equipment.

### 102 Related Work

Co-ordinate and co-operate with the following trades:

| | |
|---|---|
| Structural steel | Autoclaved aerated concrete |
| Blockwork | Brickwork |
| Roof installation | Wall construction |
| Concrete | Waterproofing and tanking |

### 103 Quality Assurance

A. Carry out the work by a trained and approved contractor with previous experience in other projects of this type. Submit references, certificates and full details of their experience and supervised training in the erection and installation of aerated autoclaved concrete (AAC) panels.

B. At a location as directed by the structural engineer, prepare a mock-up wall sample of AAC panels of approximately 1.8m$^2$. Notify the structural engineer 24 hours prior to wall construction.
Approval of wall to include adhesive mixing procedures. Designate sample as control sample for all project panel erection where procedures and sample have been approved.
Discard prototypes not approved by the structural engineer and construct additional prototypes and seek approval.
When approved for surface finish, and all tolerances, commence production. Match the approved prototype in each unit delivered to the site.
Submit samples of panels to be used and obtain approval before placing orders.

C. As a condition of supply, the manufacturers of all panels, adhesives and surface coatings will be required to inspect the on-site construction of the sample wall and of the first batch of each type of panel and erection condition. The manufacturers/suppliers will be required to certify in writing to the structural engineer that the preparation and application procedures are in accordance with the manufacturer's product literature and have not in any respect breached the panel, adhesive or surface coating manufacturer's recommendations. This certification will identify the location and date of the inspection, the products used and include copies of the relevant manufacturer's printed instructions.
Following certification, do not vary the methods of preparation and installation from that certified by the manufacturer/supplier.

### 104 References

Comply with applicable portions of the following Australian and other Standards:

| | |
|---|---|
| AS/NZS 1170 | Structural design actions.<br>*There are 5 parts, several Supplements and Amdts, 2002 – 2011.* |
| AS 1379 2007 | Specification and supply of concrete. *Plus Supplement 1-2008* |
| AS 1418 | Cranes (including hoists and winches).<br>1418.15 1994 Concrete placing equipment. *Plus 1 Amdt, 1995.*<br>*There are several other parts and Amdts, 1991 – 2013.* |
| AS 3799 1998 | Liquid membrane-forming curing compounds for concrete. |

Comply with the requirements of local and statutory authorities.

### 105 Shop Drawings

A. Refer DOCUMENT 00800, clause 27 for Shop Drawing requirements.

B. Show on the drawings details that are necessary for manufacture, assembly, transport and installation of pre-cast members, including: sizes, dimensions and markings, reinforcement, full details of connections and inserts, concrete mix and type of cement, formwork type, project title and manufacturer's name, lifting attachments.

C. Draw to a scale nominated by the structural engineers.

D. The elevations are to show dimensions in mm which define the shape of the panel. Show the levels of the underside of the slabs to be supported, where corbels are required.

E. Detail the location of adjacent ground levels, foundation heights, penetrations and door openings.

F. Nominate lifting method and type with the drawings. Any re-design due to a nominated change by the builder will be charged for by the structural engineers at an hourly rate plus disbursements.

G. Show on the drawings the type and location of anchorage devices, anchor rails, nailable tie plates brackets, reinforcing rods within panels or to be placed in joints, gap fillers, mortar types for joints and all other required material.
Prepare set-out drawings showing doors, windows and other openings, together with accurate sizes and location of fixings.
Ensure that all dimensions are checked at site before factory manufacture of panels

**106 Approvals**

Comply with all applicable requirements of the Building Code of Australia, and to the approval of the relevant authority. Perform all required tests and make all required submissions to obtain such approvals.
All units are subject to inspection and approval by the structural engineer. The inspection will as far as possible be carried out at the ACC factory but the structural engineer may at his discretion defer inspection of any units until after delivery to site and such deferment is not to affect the contractor's responsibilities under the contract.
Provide all requisite facilities and assistance for the structural engineer and project manager to inspect the units.
Give 2 working days' notice of:
Flashings in position
Frames in position
Panels ready for ring anchors to be poured.
Do not subcontract any part of the work of this section without prior approval of panel manufacturers.

**107 Delivery, Handling And Storage**

Comply with the code of practice for pre-cast and tilt-up concrete.
Protect pre-cast units from damage from the time of removal from the autoclave until the completion of the installation. In particular, protect against damage from the local crushing and chafing effects of lifting and transporting equipment, torsional loading, scraping and scouring.
During transport, protect all visible arrises with thick non-rigid inert non-absorbent crushable casings such as 50mm polyurethane foam.
Store and handle units in a manner approved by the manufacturer. Store units horizontally on edge where possible and supported on timber bearers. Handle and support to ensure that no overstress will occur during handling.
Keep units in storage clear of the ground, in positions where they cannot be walked on and are clear of materials capable of straining or marking.
Stack units so that they support their own weight only, and not that of other units.

## PART II MATERIALS

**201 Acceptable Manufacturers**

**202 Materials**

The acceptable manufacturer will supply all components and will be solely responsible for manufacture of panels, selection and supply of his recommended accessories as indicated on the Shop Drawings.
Materials not shown on Shop Drawings are required to be supplied by the contractor/builder.
Fixings are to be capable of developing sufficient anchorage strength in the material.
Protect reinforcement from corrosion before embedment in AAC, or mortar.
The structural engineer will be responsible for checking selected materials before installation.

**203 Finish**

**204 Protection and Identification**

Clearly and permanently identify each pre-cast unit and relate to the units shown on the Shop Drawings. Place the identifying mark on a surface of no visual significance and include the date of casting. Do not give the same number to more than one unit.

**205 Tolerances**

Do not increase planar misalignment above a maximum of 2mm along butt joints. Do not vary the thickness and width of panels by more than 1 to 1.5mm from design sizes. Deviation from plumb, level or dimensioned angle is not to exceed 3mm per 3.5m of length of any member, or 6mm in any total run in any line. Deviation from theoretical position on plan or elevation, including deviation from plumb, level of dimension angle, is not to exceed 9mm total at any location. Do not exceed 3mm for any 3.5m run in any direction when there is a change in deviation.
Design panels to allow for deflection of structural supporting beams up to span/500mm.

**206 Rejection Criteria**

Panels are liable for rejection if any of the following defects occur:
A joint has been made at a location or in a manner not in accordance with this specification.
The construction tolerances have not been met.
The reinforcing steel has been displaced from its correct location.
Items embedded in panels or concrete have been displaced from their correct position.
The work can be shown to be otherwise defective.
Remove from the site panels requiring modification and replace with correct panels within seven days.
Inspect panels for hairline cracks before installation and on completion of each structural bay. Remove from the site panels with hairline cracks.
The structural engineer may permit panels liable to rejection to be retained on the following bases:
An appraisal of the statistical information related to the panel strength and appearance.
A structural investigation
Additional tests
Approved remedial work

Repair of damaged units
Demonstrate the proposed repair methods to the structural engineer and obtain his acceptance in writing of the method.
Repair exposed surfaces by using the same type of cement and mix proportions. The repaired unit is to have the same appearance and durability of a similar undamaged unit.
Remove panels finally rejected to the extent determined by the structural engineer.

## PART III EXECUTION

### 301 Examination

Inspect site conditions before start of work on site. Rectify conditions where necessary before start of work. Start of work means total acceptance of conditions.

### 302 Installation

A. Comply with the code of practice for tilt-up and pre-cast concrete.
B. Supply grout, temporary fixings, shims, braces, mortar, fire-proofing, protection, sealant, joining strips and flashings required for erection of units on the site.
C. Erect pre-cast elements into their final positions with the specified tolerances and connect and joint in accordance with the requirements of the contract.
D. Be responsible for the erection and method of erection, design and installation of bracing and shoring of the panels during construction, until the structure has been sufficiently completed to enable the panel to carry its own loads.
E. No bracing is to be removed until approved in writing by the structural engineers.
F. Submit a design of the braces intended to be used together with a plan detailing their use locations.
G. Where cranes are used, comply with AS 1418.
H. Installation of Sealants: install required sealants and jointing materials in accordance with manufacturer's instructions and to the satisfaction of the council engineer, structural engineers and project manager.
I. Install panels in accordance with panel manufacturer's written instructions.

### 303 Scaffolding

Provide scaffolding where necessary.
Comply with Scaffolding Code of Practice and relevant Australian Standards.

### 304 Adjustment

Adjust panels to correct position in relation to support structure and each panel in relation to its neighbour.

### 305 Jointing

Complete joints as indicated on drawings. Joints may be varied or eliminated only with prior approval of the structural engineer.

### 306 Cleaning

Thoroughly clean all visible panel surfaces with brushes and approved material detergents. Achieve uniform finish throughout. Arrange for inspection by engineer and project manager on completion.

### 307 Protection

Protect all exposed vulnerable surfaces, edges, covers, etc. for the duration of the contract. Use materials and methods which will not harm pre-cast materials.

### 308 Completion

Complete contracted work in accordance with contract documents and written variation orders issued by the project manager.

**END OF SECTION**

## PART I GENERAL

### 101 Scope

The work of this section includes but is not limited to:
Preparation supply and execution of exposed aggregate finishes, grooved surface finishes, tooled finishes
Preparation supply and installation of bagged finish.

### 102 Related Work

Co-ordinate and co-operate with the following trades:

| | |
|---|---|
| Textured finish | Coloured concrete flooring |
| Cement render | Waterproofing and tanking |
| Concrete | |

### 103 Quality Assurance

A. The selected sub-contractor is to have a minimum of 5 years' experience in the application of the specified or similar material, and is to be known for reliability, performance and quality of work.

B. At a location and time to be selected by the project manager construct a complete prototypical installation. Approx. 3m square of each type of finish is required. Include all elements provided under this section and finish in every respect. On approval by the project manager, the prototype will become the standard for the remaining work, and will remain as part of the work.
Obtain approval for colour from the project manager.

### 104 References

Comply with applicable portions of the following Australian Standards:

| | |
|---|---|
| AS 1379 2007 | Specification and supply of concrete. *Plus Supplement 1-2008* |
| AS 3610.1 2010 | Formwork for concrete –Documentation and surface finish. |
| AS 3700 2011 | Masonry structures. *There is 1 Supplement 2012* |
| AS 3799 1998 | Liquid membrane-forming curing compounds for concrete. |
| HB 64 2002 | Guide to concrete construction. Chapters 8 and 15. |
| CIA Z39-2008 | Render finishes. |

### 105 Delivery, Handling and Storage

Deliver materials in sealed (where applicable) containers and store in a dry location on the site.

### 106 Submissions

The project manager will supply to the contractor a sample of the required material from the range obtained from the supplier.
The sample will indicate all aspects of the required finish, size of granules, colour, texture, finish etc.
An appropriate supplier's specification may be available from the project manager.

### 107 Warranty

Provide a warranty to the proprietor covering cracking, peeling and fading for a period of years.

## PART II MATERIALS

### 201 Acceptable Suppliers

### 202 Material

A. Bagging
Mortar for bagging:
Same mortar as used for laying.
Colour : M3 mortar, with powdered metallic oxide pigment added to achieve a dry colour approved by the project manager.

B. Description of finishes:

## PART III EXECUTION

### 301 Examination

Inspect surfaces to be treated and notify project manager of any discrepancy or unsuitability of substrate.
Comply with manufacturer's recommendations regarding environmental conditions.
Start of work means total acceptance of conditions.

### 302 Preparation

Do not proceed with the installation in unsuitable weather.
Protect wood, metal, glass and other finished work during progress.

Make good damage in every respect at no additional cost to the proprietor.
Provide and install required scaffolding, hoisting equipment, etc. in accordance with statutory authority regulations.
Mask dissimilar materials adjacent to surfaces to be treated in order to avoid contact, e.g. metal frames and cappings. Do not apply material over soft surfaces such as jointing material.

**303 Application**
Apply in accordance with manufacturer's recommendations or approved sample regarding mixing of materials and application methods.

**304 Finish**
Match approved sample panel - refer clauses 103.

**305 Protection**
Protect finished surfaces against damage until Practical Completion.

**306 Cleaning**
At completion of work remove debris, scaffolding, erection materials, etc. and leave surfaces in a condition entirely satisfactory to the project manager.

**307 Completion**
Complete contracted work in accordance with contract documents and written variation orders issued by the project manager.

**END OF SECTION**

## PART I GENERAL

### 101 Scope

This trade sections specifies the requirements for finishing concrete floors. Refer Schedule of Finishes.
The finishing includes but is not limited to:
Polishing
Colouring
Painting

### 102 Related Work

Co-ordinate and co-operate with the following trades:
Concrete Concrete screeds
Waterproofing and tanking

### 103 Quality Assurance

At a location and time to be selected by the project manager, construct a complete prototypal installation approximately 3m square. Include all elements provided under this section and finish in every respect. On approval by the project manager, the prototype will become the standard for the remaining work, and will remain as part of the work.

### 104 References

Comply with applicable portions of the following Australian Standards:

| | |
|---|---|
| AS 1379 2007 | Specification and supply of concrete. *Plus Supplement 1-2008* |
| AS 2870 2011 | Residential slabs and footings - Construction. |
| AS/NZS 3661.2 1994 | Slip resistance of pedestrian surfaces – Guide to the reduction of slip hazards. |
| AS 3799 1998 | Liquid membrane-forming curing compounds for concrete. |
| AS 4586-2013 | Slip resistance classification of new pedestrian surface materials |
| HB 64 2002 | Guide to concrete construction. Chapter 8, Part 2 Finishing Concrete flat work provides full descriptions of methods of finishing concrete floors. |
| HB 197 1999 | An introductory guide to the slip resistance of pedestrian surface materials. |

Cement Concrete and Aggregates Australia: Briefing 05: Polished Concrete Floors. Visit www.concrete.net.au

### 105 Delivery, Handling And Storage

Deliver materials properly packaged to the site in original, unopened containers with grade, type and quality indicated on the labels.
Store and protect materials raised above floor and kept dry until ready for use. Comply with hazardous substances/chemical regulation and code of practice.

## PART II MATERIALS

### 201 Acceptable Manufacturers

### 202 Material

Pigment: Oxide, colours:
Concrete: N25 (25Mpa) recommended for polished concrete. 80mm slump mix.

Dry shake topping: 1 part cement
0.06 to 0.1 part oxide pigment
2 parts clean sharp sand
Chemical curing compounds: not recommended
Paint:

Bees wax
2 part clear polyurethane

## PART III EXECUTION

### 301 Examination

Start of work means total acceptance of conditions.

### 302 Preparation

Prepare to apply finishing treatment at the agreed upon time arranged with the project manager.

**303 Alternate Types of Finish**

**TYPE A: Coloured concrete**

The finish is to be achieved in the following sequence:

A. Apply wood float finish to poured concrete floor to desired smoothness

B. Apply dry-shake mix to concrete surface. Repeat this if a variety of coloured pigment is to be obtained. Match sample approved by project manager.

C. Machine float. "Helicopter" machine worked over the coloured concrete to required density and smoothness to match approved sample.

D. Curing - membrane method.
Maintain damp for seven days. Cure to HB 64.

**TYPE B: Procedure for grinding and polishing new and old concrete**

Ensure that new concrete is cured and hard enough. (NOTE: if old concrete has a weak cement ratio, it tends to tear out the matrix when grinding. this leaves a rough finish with aggregates proud.)

A. Avoiding or collecting generated dust to prevent persons breathing in dust, grind concrete with 60 grit diamonds to expose aggregates. Grind to a honed finish, using in stages, 36 - 60 and 120 grit to erase scratches left by diamond cutting.

B. Thoroughly clean the surface free from slurry, grindings, grit etc.

C. If concrete is porous or has holes or voids, grout with neat cement or approved equivalent, taking care to fill slightly above the surface by machine or by hand. May need to be re-done if grout shrinks as it sets.

D. Next day, or sooner if grout is hard enough, polish off with 120 grit or 220 grit stone finish, depending on what is required.

E. Thoroughly wash and clean the surface.

F. Dry the surface to accept sealer. Check with sealer manufacturer regarding how dry the surface should be. If sealer is not dry enough, milky patches will appear after sealer is applied.

G. Seal with approved proprietary-type, clear sealer:
   1. Water-based, epoxy/acrylic sealer.
   2. Solvent-based acrylic sealer.
   3. Two pack polyurethane sealer.

H. When sealer is hard enough, buff sealer if required.

**TYPE C: Application of colour finish**

If floor is to be coloured with one overall colour, prepare a trial as per Clause 103.

A. If hazardous substance or chemical is identified on Material Safety Data Sheet, for products to be used, follow manufacturer's requirements for storage, handling, decanting, mixing, use and disposal.

B. Apply one or more coats by brush, roller or spraying with either:
   1. Epoxy resin.
   2. Solvent-based acrylic sealer.
   3. Colour primer coat, then two pack polyurethane sealer.

C. Leave to cure for 24 hours or more if necessary.

D. Buff the surface to remove any overspray or dust or pimples, then apply 2 or more coats of clear sealer. Buff for a higher gloss finish.

**304 Protection**

Protect the surface of the floor from damage until completion of the building by laying hardboard panels or other suitable material over the entire surface.

**305 Paint**

Test the finished concrete for moisture content. Refer to the paint supplier for acceptable moisture content before applying paint. Apply paint to manufacturer's instructions and to project manager's approval.

**306 Completion**

Complete contracted work in accordance with contract documents and written variation orders issued by the project manager.

**END OF SECTION**

## PART I GENERAL

### 101 Scope

Provide and install a complete installation of pre-cast concrete work including but not limited to panels, inserts, panel erection, joint sealers and accessories.
Provide related services including transport, hoisting and equipment.
Note: the builder may choose on or off-site manufacture of pre-cast panels.

### 102 Related Work

Co-ordinate and co-operate with the following trades:

| | |
|---|---|
| Concrete finishes | Structural steel |
| Concrete | Waterproofing and tanking |

### 103 Quality Assurance

A. Quality is to be monitored by:
   1. The builder.
   2. The project manager and structural engineer.
   3. Approved samples.
   4. Approved installation sample.

   Be fully responsible for the complete installation and the quality of:
   1. Concrete mix.
   2. Formwork dimensional control.
   3. Reinforcement including maintenance of cover.
   4. Colour matching.
   5. Handling, loading and shipping.
   6. Site handling, hoisting and storage.
   7. Erection.
   8. Sealants.

B. The engineer will provide an appropriate level of monitoring of the Quality Control Programme, which may include periodic or random (unscheduled) plant visits.
   Inspections by the engineer will not relieve the builder of his responsibility to carry out his own inspection to ensure compliance with the specification and drawings.
   Design of Panel Anchorage: ensure that the panels meet the requirements of fabrication, transport, unloading, handling or stacking of the panels.
   Details of anchorage for lifting and fixing ferrules are to be approved by the Department of Labour and Industry.

C. The selected sub-contractor is to have a minimum of five years' experience in the application of the specified or similar material, and is to be known for reliability, performance and quality of work.

D. At a location and time to be selected by the project manager construct a complete prototypical installation approx. 3m square. Include all elements provided under this trade section and finish in every respect. On approval by the project manager, the prototype will become the standard for the remaining work, and will remain as part of the work.
   Obtain approval for colour from the project manager.

### 104 References

Comply with applicable portions of the following Australian Standards:

| | | |
|---|---|---|
| AS 1012 | Methods of testing concrete. | |
| | *There are 27 parts plus 1 Amdt, 1991 – 2000.* | |
| AS 1379 2007 | Specification and supply of concrete. *Plus Supplement 1-2008* | |
| AS 1418 | Cranes (including hoists and winches). | |
| | 1418.15 1994 | Concrete placing equipment. *Plus 1 Amdt 1995.* |
| | *There are several other parts and Amdts, 1991 – 2013.* | |
| AS 1478.1 2000 | Chemical admixtures for concrete, mortar and grout – Admixtures for concrete. | |
| AS/NZS 1554 | Structural steel welding. | |
| | 1554.1 2011 | Welding of steel structures. *Plus 1 Amdt 2005.* |
| | 1554.2:2003 | Stud welding (steel studs to steel). *Plus 1 Amdt 2003.* |
| | 1554.3:2008 | Welding of reinforcing steel |
| | 1554.4:2010 | Welding of high strength quenched and tempered steels |
| | 1554.5:2011 | Welding of steel structures subject to high levels of fatigue loading |
| | 1554.6:2012 | Welding stainless steels for structural purposes |
| | 1554.7:2006 | Welding of sheet steel structures |
| AS 2550 | Cranes, hoists and winches - Safe use. | |
| | *There are 14 parts, 1994 – 20011 plus 4 Amdts 1999-2009.* | |
| AS 3600 2009 | Concrete structures*. Plus 2 Amdts, 2010, 2013.* | |
| AS 3610.1 2010 | Formwork for concrete –Documentation and surface finish. | |
| AS 3799 1998 | Liquid membrane-forming curing compounds for concrete. | |
| AS 3850 2003 | Tilt-up concrete construction. | |

| | |
|---|---|
| AS 3972 2010 | General purpose and blended cements. |
| AS/NZS 4671 2001 | Steel reinforcing materials. *Plus 1 Amdt, 2003.* |
| NP PCH 2009 | Precast Concrete Handbook |
| CIA Z6 2010 | Reinforcement detailing handbook. |
| NP 002-2006 | Precast Industrial Buildings Detailing Manual. Available from www.nationalprecast.com.au |

Comply with the recommendations of applicable parts of the following documents:
"Ingal Specifier's Manual" from the Industrial Galvanizers Corporation website: www.ingal.com.au

**105 Submissions**

Submit a delivery, unload and placement plan.
Certified lifting points to be identified by a registered, practising engineer.

**106 Shop Drawings**

A. Refer DOCUMENT 00800, clause 27.
B. Show on the drawings, details that are necessary for manufacture, assembly, transport and installation of pre-cast members, including: sizes, dimensions and markings, reinforcement, full details of connections and inserts, concrete mix and type of cement, formwork type, project title and manufacturer's name, lifting attachments.
C. Draw to a scale nominated by the consulting engineers.
D. Show dimensions in mm which define the shape of the panel. Where corbels are required, show the levels of the underside of the slabs to be supported.
E. Detail the location of adjacent ground levels, foundation heights, penetrations and door openings.
F. Nominate lifting method and type with the drawings. Any re-design due to a nominated change by the builder will be charged for by the consulting engineer at an hourly rate plus disbursements.

**107 Delivery, Handling And Storage**

Comply, as a minimum with the code of practice for tilt-up and pre-cast concrete.
Co-ordinate delivery schedule closely with builder. Except as otherwise directed, deliver fabrications in the same sequence as they are to be installed. Avoid double handling at the site if possible, to minimise chance of damage to finishes. Co-ordinate delivery and fixing schedules with builder to reduce use of cranes.

**108 Project Conditions**

A. General: refer to appropriate sections of the contract conditions.
B. Measurements: before ordering material or doing work, verify measurements and be responsible for the correctness of same. No extra charge or compensation will be allowed on account of difference between actual dimensions and the dimensions indicated on the drawings. Submit differences which may be found to the project manager in writing for consideration before proceeding with the work.
Dimensions: where Shop drawings are prepared by sub-contractors or suppliers, and indicate field dimensions which have not been taken, take such field dimensions before submitting shop drawings. Where dimensions are given and marked "verify" or "verify in field", correct before submitting shop drawings. Where field conditions do not yet exist for taking or confirming of field dimensions, note shop drawings with "dimensions will be verified in field", before submitting.
C. Be wholly responsible for protecting the work from damage. Take required measures to protect the work at times against fire, storm, theft, vandalism and other losses.

**109 Warranty**

Forward to the project manager a statement guaranteeing that the concrete conforms with the approved mix design and that concrete has attained the required guaranteed strength in days.

## PART II MATERIALS

**201 Acceptable Manufacturers of Pre-cast Concrete Panels**

**202 Manufacturing Criteria**

A. Tolerances:
Form pre-cast concrete within the general concrete tolerances specified for "Off Form" finishes as follows :
Width/length thickness - dimensions up to 3,000mm +/- 3mm
Dimensions over 3,000mm +/- 0.1% dimension.
Plane of face and wind - dimensions up to 3,000mm +/- 6mm
Dimensions over 3,000mm +/- 0.2% dimension.
B. Limit cumulative error to the following criteria :
Panel joints: minimum 10mm maximum 20mm
Adjacent panel alignment:
On external faces - a maximum error of 2mm
Vertical plumb - a maximum out of plumb of 5mm
C. Formwork
Conform generally to the requirements of the relevant formwork sub-sections of AS 3610.1.

**203 Materials**

A. Concrete and Reinforcement: comply with the requirements of the concrete specification.
The concrete strengths and reinforcement properties: as noted on the drawings and/or as specified elsewhere in this specification.

B. Jointing material to pre-cast panels: seal joints between pre-cast panels against water penetration and fire. Certify that the detail adopted is in accordance with the building regulations. Test results are to be submitted for approval by the council and consulting engineer.
Materials:
1. External walls, fire-rated: (fire-rating to be determined by local council). Applied in accordance with fire-rating requirements, over closed cell polyethylene foam backer rod.
2. External walls, not fire-rated: over closed cell backer rod as above.
3. Internal joints: or approved equivalent.

Installation of sealants: apply materials in accordance with manufacturer's instructions and to the satisfaction of council inspector and project manager.

C. Concrete admixtures: comply with AS 1478.1. Obtain written approval from the consulting engineer for the use of admixture.

D. Embedments: recess lifting attachments such as ferrules or other types of cast-in fixings and provide with an approved plug for sealing.
1. Lifting attachments, clear holes and other temporary fixings for handling purposes are not to occur on visible faces of units unless approved as to size and position.
2. Any fittings or cast-in fixings which will be exposed before or after erection: brass or hot dipped heavy duty galvanised after fabrication and drilling operations on them have been completed.

E. Bond-breaker: use a coloured bond-breaker which will provide no suction and also no residual effects to the application of surface finishes.

F. Waterproofing: add mixture. Refer section 07130 WATERPROOFING AND TANKING, System Type D.

**204 Finish**

Unless noted otherwise, the finish of the pre-cast units are to comply with the requirements for Formwork Class 3 in AS 3610.1 and as follows:
“Medium quality concrete, colour not critical but built to close tolerance.”
The formwork is to be in accordance with:

**205 Curing**

Cure pre-cast in accordance with applicable portions of AS 3600. Steam curing is not permitted.

**206 Protection and Identification**

Protect pre-cast units from damage in accordance with the concrete specification from the time of removal from the mould until the completion of the project. In particular, protect units against damage from the local crushing and chafing effects of lifting and transporting equipment.
Provide additional protection which is required where concrete will be poured at levels above units which have been erected.
Clearly and permanently identify each pre-cast unit and relate to the units shown on the Shop drawings. Place the identifying mark on a surface of no visual significance and include the date of casting. Do not give the same number to more than one unit.

**207 Defective Panels**

Panels may be rejected by the consulting engineer or the project manager if they do not meet the specification or if they are damaged during erection.
Produce a standard of finish and general appearance of the panel commensurate with its use, location and also final surface coating. Rough finishing of surfaces, edges and arrises will not be accepted. Corbels will be finished to an off-form standard.
Rejected panel will be replaced with another panel within 7 days of notification of rejection.

**208 Repairs**

If the pre-cast units fail to comply with the performance requirements of the specification as applicable, and are thereby liable to rejection, the engineer may permit the units to be retained subject to approved remedial works.

**209 Inspections**

Give a minimum of 24 hours’ notice to the consulting engineer during manufacture of the units at the following stages:

A. The formwork being completed and ready for inspection.

B. The completion of fixing of the reinforcement. Allow sufficient time for the carrying out of the inspection (not less than 2 working hours).

C. The provision and fixing of cores and embedments. Allow sufficient time for inspection.

D. The placing of concrete.

**210 Testing of Concrete**

Conform generally to the requirements of AS 1012.

**211 Pre-Delivery Handling**

A. Follow code of practice for tilt-up and pre-cast concrete.
B. Store and handle units in a manner approved by the engineer.
C. Store units in a similar manner to final support conditions. Handle and support only from designed lifting points and ensure that no over-stress or permanent deformation will occur during handling. Adequately brace slender units to prevent lateral deformation.
D. Keep units in storage clear of the ground, in positions where they cannot be walked on and clear of materials capable of staining or marking.
E. Separations of packs used in storage are to be on inert non-absorbent materials such as polyurethane foam or PVC. Stack units so that they support their own weight only and not that of other units.
F. Cover surfaces during storage or transport with non-staining waterproof paper or polyethylene sheet.
G. Stresses in the units during handling and erection is not to exceed allowable stresses for concrete as set out in AS 3600.

## PART III EXECUTION

**301 Examination**

Inspect site before delivery of pre-cast panels.
Ensure that conditions at site are entirely satisfactory and ready to receive the work of this trade section.
Rectify base if situation found unsatisfactory.
Start of work means total acceptance of conditions.

**302 Installation**

A. Ensure the code of practice for pre-cast and tilt-up concrete is used as a minimum standard for delivery, unloading, erection and installation of tilt-up and pre-cast concrete elements and other relevant statutory requirements for tasks or activities, i.e. work at height, hazardous substances etc.
B. Supply grout, temporary fixings, shims, braces, mortar, fire-proofing, protection, sealant, joining strips and flashings required for erection of units on the site.
C. Erect pre-cast elements into their final positions with the specified tolerances and connect and joint in accordance with the requirements of the contract.
D. Be responsible for the erection and method of erection, design and installation of bracing and shoring of the panels during construction, until the structure has been sufficiently completed to enable the panel to carry its own loads.
E. No bracing is to be removed until approved in writing by the consulting engineer.
F. A design of the braces intended to be used is to be submitted together with a plan detailing their use locations.
G. Where cranes are used, comply with AS 1418.
H. Installation of Sealants: install required sealants and jointing materials in accordance with manufacturer's instructions and to the satisfaction of the council engineer, consulting engineer and project manager.

**303 Adjustment**

Adjust panels to correct positions in relation to support structure and each panel in relation to its neighbour.
Tighten bolts only after achieving optimum relationships.

**304 Packing and Grout**

A. Where necessary, or specified, provide packers of the following materials:
compressed fibre cement, galvanised steel, rigid high-impact plastic (where approved by the consulting engineer).
B. Place packers so that no face is closer than 25mm to face of the panel. Size packers at least 150mm long in the direction of length of the panel.
C. Provide "under" and "over" dowel pins as specified.
Grout pins after the panels are erected by injecting grouting using grout tubes.
D. Fill the gap between the panel and its supporting base completely with a non-shrink inert, non-staining grout of a type to be approved by the consulting engineer. The method of application of this grout and the person applying it is to be approved prior to work commencing.
E. Take care to ensure that the grout does not interfere with the waterproofing methods.

**305 Cleaning**

Thoroughly clean visible panel surfaces with brushes and approved material detergents. Achieve uniform finish throughout. Arrange for inspection by engineer and project manager on completion.

**306 Protection**

Protect exposed vulnerable surfaces, edges, covers, etc. for the duration of the contract. Use materials and methods which will not harm pre-cast materials.

**307 Completion**

Complete contracted work in accordance with contract documents and written variation orders issued by the project manager.

**END OF SECTION**

## PART I GENERAL

### 101 Scope

Provide and install a complete installation of tilt-up concrete panel work including but not limited to panels, cast-in fitments, inserts, panel erection, joint sealers and accessories.
Provide related services including construction Shop Drawings, hoisting and equipment.

### 102 Related Work

Co-ordinate and co-operate with the following trades:

| | |
|---|---|
| Concrete | Structural steel |
| Waterproofing and tanking | |

### 103 Quality Assurance

A. Quality is monitored by:
   1. The builder who is experienced in this form of construction.
   2. The project manager and structural engineer, who will provide an appropriate level of monitoring of the Quality Control Programme, which may include periodic or random site visits.

B. Be fully responsible for the complete installation and the quality thereof, including:
   1. Concrete mix.
   2. Formwork dimensional control.
   3. Reinforcement and cast-in connection and lifting assemblages, including the maintenance of cover.
   4. Colour matching.
   5. Site handling, lifting and positioning.
   6. Levelling.
   7. Temporary bracing.
   8. Final bracing.
   9. Sealants.

   Submit evidence of minimum 5 years of experience in the manufacture and erection of tilt-up pre-cast concrete panels.

### 104 References

Comply with applicable portions of the following Australian Standards:

| | | |
|---|---|---|
| AS 1012 | Methods of testing concrete. *There are 27 parts plus 1 Amdt, 1991 – 2000.* | |
| AS 1379 2007 | Specification and supply of concrete. *Plus Supplement 1, 2008.* | |
| AS 1478.1 2000 | Chemical admixtures for concrete, mortar and grout – Admixtures for concrete. | |
| AS/NZS 1554 | Structural steel welding. | |
| | 1554.1 2011 | Welding of steel structures. |
| | 1554.2:2003 | Stud welding (steel studs to steel). *Plus 1 Amdt 2003*. |
| | 1554.3:2008 | Welding of reinforcing steel. |
| | 1554.4:2010 | Welding of high strength quenched and tempered steels. |
| | 1554.5:2011 | Welding of steel structures subject to high levels of fatigue loading. |
| | 1554.6:2012 | Welding stainless steels for structural purposes. |
| | 1554.7:2006 | Welding of sheet steel structures. |
| AS 3600 2009 | Concrete structures*. Plus 2 Amdts, 2010, 2013.* | |
| AS 3610.1 2010 | Formwork for concrete – Documentation and surface finish. | |
| AS 3799 1998 | Liquid membrane-forming curing compounds for concrete. | |
| AS 3850 2003 | Tilt-up concrete construction. | |
| AS/NZS 4671 2001 | Steel reinforcing materials. *Plus 1 Amdt, 2003.* | |
| CIA Z6 2010 | Reinforcement detailing handbook. | |
| CCAA T55-2005 / CIA Z10-2005 | Guide to Tilt-up Design and Construction. | |

### 105 Submissions

Submit a cast, lift and management plan.
Certified lifting points to be identified by a registered, practising engineer.
Certification of completed structure, including panel retention in fire, by registered practising engineer.

### 106 Shop Drawings And Computations

A. Prepare Shop Drawings to requirements in DOCUMENT 00800, clause 27.

B. Submit with the above Shop Drawings, 2 copies of the computations showing that the panels have been designed in accordance with relevant regulations and Standards Australia codes, commensurate with the best current structural engineering design practice, to resist bending movements, shear forces and axial forces due to dead, live and impact loads endured in removing the panels from moulds, handling on site and in the pre-casting area, transporting and erection.

C. Draw Shop Drawings clearly and to scale and include the following information:

Marking plans showing location of panels
Dimensions and profiles of each member
Reinforcement details
Lifting, bracing and fixing insert details
Connection and cast-in assemblage details
Special details including openings and embedments
Full lifting and handling details for each panel
Concrete specification including strength at lift
Weight of each panel.

D. Approval of Shop Drawings relates to the consulting engineer's requirements of strength and detail only, and the builder remains responsible for the fitting together and completion of the work in accordance with the contract documents.

**107 Project Conditions**

A. General: refer to appropriate sections of the contract conditions.

B.

1. Measurements: Before ordering material or doing work, verify measurements and be responsible for the correctness of same. No extra charge or compensation will be allowed on account of difference between actual dimensions and the dimensions indicated on the drawings. Submit differences which may be found to the project manager in writing for consideration before proceeding with the work.
2. Dimensions: where Shop Drawings are prepared by sub-contractors or suppliers and they indicate field dimensions which have not been taken, take such field dimensions before submitting Shop Drawings. Where field conditions do not yet exist for taking or confirming same, note Shop Drawings with "dimensions will be verified in the field", before submitting.

C. Be wholly responsible for protecting the work and the materials stored on the site. Take required measures to protect the work at times against fire, storm, theft, vandalism and other losses.

**108 Warranty**

Forward to the consulting engineer, a statement guaranteeing that the concrete is in accordance with the strength requirements specified, before attempt is made to lift the panels.

## PART II MATERIALS

**201 Acceptable Manufacturers**

Connection devices, inserts:

**202 Materials**

A. Concrete and reinforcement: comply with the requirements of section 03310 CONCRETE, clause 104. The concrete strengths and reinforcement properties: as noted on the drawings and/or as specified elsewhere in this specification.

B. Jointing material to pre-cast tilt-up panels: the detail adopted is to be certified and in accordance with the state building regulations. Submit test results for approval by the council and the consulting engineer. Provide sealants and fire-rating material in accordance with the manufacturer's published recommendations. Materials:

1. External walls, fire-rated: fire-rating to be determined by local council. Applied in accordance with fire-rating requirements, over closed cell polyethylene foam backer rod.
2. External walls, not fire-rated: over closed cell backer rod as above.
3. Internal joints:

C. Admixtures: comply with AS 1478.1. Written approval from the consulting engineer is required for other admixture to be used.

D. Embedments: lifting attachments such as ferrules or other types of cast-in fixings: recessed to allow patching with an epoxy mortar. Cast-in assemblies, fittings and fixings which will be exposed before or after erection: hot dipped heavy duty galvanised after fabrication operations of them have been completed.

E. Bond-breaker: the curing compound and release agent (bond breaker) are to be compatible. Use a proven proprietary combined curing compound/release agent which will allow the specified finishes to adhere to the surface. Apply in accordance with the manufacturer's specification.

**203 Connections, Inserts And Holes**

A. Describe on the Shop Drawings, the locations, sizes and types of fixing, hoisting, handling and erection devices.

B. Mark distinctively the lifting ferrules on the panels so as to be easily identifiable from other types of ferrules. Locate accurately all components. Do not alter locations.

C. Bolts, nuts, washers, lifting inserts and ferrules : hot-dip galvanised or zinc plated.

D. Permanent brackets: mild steel, inorganic zinc silicate coated applied over completely rust-free metal.

E. Submit design of braces intended to be used together with a plan detailing their use locations.

F. Provide levelling pads consisting of one of the following :
Compressed fibre cement shims, in-situ concrete, or rigid high-impact PVC shims.

G. Concrete levelling pads: at least 500 mm long x full thickness of the panel. PVC shims should be at least 150 mm long. The length of the pads is dependent on the panel bearing stresses.
H. Grout or dry-pack the gap between the top of the supporting footing or slab recess with non-shrink mortar.
I. Waterproofing: add mixture. Refer section 07130 WATERPROOFING AND TANKING, System Type D.

**204 Testing of Concrete**

Conform generally to the requirements of AS 1012.

## PART III EXECUTION

**301 Examination**

A. Inspect the site before commencing manufacture of pre-cast tilt-up panels.
B. Ensure that the conditions at the site are entirely satisfactory and ready to receive the work of this section.
C. Request rectification by builder if bases, floor slabs or situation is found unsatisfactory.
D. Start of work means total acceptance of conditions.

**302 Inspections**

Give a minimum of 24 hours' notice to the consulting engineer for inspections of:
A. The completion of fixing of reinforcement, ferrules, inserts and cast-in connection assemblies.
B. The placing of concrete.

**303 Design**

A. The reinforcement shown on the contract drawings is mandatory, and has been determined assuming expected construction procedures and in-service loads.
B. Confirm or increase the documented reinforcement and fixtures to conform with engineer's assessment of the loads as defined above.
Modifications will be entirely at the builder's expense.

**304 Formwork and Forming Panels**

A. Design formwork and construct to provide formed surfaces of a standard not lower than Class 2 as described in AS 3610.1.
B. Support forms and brace to maintain position and shape during and after placing of concrete. Do not reduce the accuracy of the finished concrete shapes or vary the quality of the surface when repeatedly using forms.
C. If the contractor elects to manufacture the panels using stack casting, pour a casting bed to the satisfaction of the engineer, and design stacked forms capable of withstanding manufacturing and casting operations without damage to panel lower in the stack.
D. Approval may be given for stack casting on either internal or external floor slabs, if the contractor submits an acceptable procedure. Minimise damage to the floor slabs and repair damage to the satisfaction of the engineer.
E. Do not proceed with stack casting of panels until the previous panel poured has attained sufficient strength not to be damaged by subsequent manufacturing operations.
F. Stack casting of panels is not to exceed 6 no. panels or 1.2 M total thickness, whichever is the greater.
G. Comply throughout with AS 3600 and AS 3850.
H. Steam curing of concrete is not permitted.

**305 Preparation for Lifting**

A. Prepare bracing for immediate connection after panels are lifted.
B. Be responsible for the safety of operations at stages of the lifting and handling of the panels.
C. Install levelling pads.

**306 Tolerances**

A. Tolerances on the indicated finished dimensions of the pre-cast tilt-up panels at the time of assembly in the building: in accordance with AS 3600 and the following clauses.
B. Exposed faces of panels: in one plane. Angles, unless otherwise shown, right angles.
C. Maximum variation from plane is not to exceed 3 mm under any 3 metre length of a straight-edge in any position on the panel.
D. Notwithstanding the above, do not exceed cumulative error as follows:
Panel Joints: Minimum 10mm, maximum 20mm.
Adjacent Panel Alignment:
On external faces - a maximum error of 2mm
Vertical plumb - a maximum out of plumb of 5mm
Joint plumb - a maximum out of plumb of 5mm

**307 Finish**

In the finish of the pre-cast tilt-up panels comply with the requirements for formwork and as follows:
Medium quality concrete, colour not critical but built to close tolerance.
Formwork: in accordance with:

**308 Defective Panels**

A. Panels may be rejected by the consulting engineer or the project manager if they do not meet the specification or if they are damaged during manufacture or erection.

B. The standard of finish and general appearance of the panels is to be of a standard commensurate with its use, location and final surface coating.

1. Rough finishing of surfaces, edges and arrises will not be tolerated.

C. Replace rejected panel with another panel without cost to the proprietor.

**309 Lifting and Handling**

A. Comply, as a minimum with the crane code of practice.

B. Be responsible for the erection and method of erection, design and installation of bracing and shoring of the panels during construction, until the structure has been sufficiently completed to enable the panels to carry their own loads.

C. Erect pre-cast tilt-up panels into their final positions with the specified tolerances and connect and joint in accordance with these requirements.

D. Handle, lift, and position pre-cast tilt-up panels in a manner which does not cause damage or cracking. Take up the weight gradually without snatch. When panels are being lowered, let down gently into position without impact.

E. Adequately brace and support panels during handling. Erect and temporarily brace to ensure proper alignment and safety.

F. Lower panels onto the levelling pads previously set at predetermined level. Locate each panel so that no alterations to the fixing are made, and that no subsequent slope or movement occurs, and that no undesirable stresses are built into the panels or connections.

G. Provide necessary frames, braces, guys, wedges and other supports and secure in place.

H. Grout or dry-pack the gap between the top of the supporting footing or slab recess with non-shrink mortar.

I. Install grout, temporary fixings, shims, braces, mortar, fire-proofing, protection, sealant, joining strips and flashings required for erection of pre-cast tilt-up panels on the site.

J. If in the opinion of the project manager or consulting engineer, panel after erection does not conform to the conditions specified for appearance and position, take down and replace at no cost to the proprietor.

**310 Joint Sealing**

A. Do not seal joints until completion of installation of pre-cast tilt-up panels.

B. Joint sealing to be done by an approved specialist sub-contractor who is well equipped for the work, skilled in the sealing of joints, and recommended by the manufacturer and/or supplier of the sealant as an approved applicator.

C. Seal joints. Refer clause 202.

**311 Protection**

Protect the pre-cast tilt-up panels from damage from the time of removal from the forms until the completion of the project.

In particular protect panels against damage from the local crushing and chafing effects of lifting and handling equipment.

Protect vulnerable surfaces, edges, corners etc., for the duration of the contract. Use materials and methods which will not harm pre-cast materials.

**312 Certification**

Certification of completed structure, including panel retention in fire, to be obtained from a registered, practising engineer.

**313 Cleaning**

Thoroughly clean visible panel surfaces. Achieve a uniform finish throughout. Use approved detergents where necessary.

Arrange for inspection by consulting engineer and project manager on completion.

**314 Completion**

Complete contracted work in accordance with contract documents and written variation orders issued by the project manager.

**END OF SECTION**

## PART I GENERAL

### 101 Scope

General: supply and build the brickwork shown on the drawings or needed to complete the brickwork, including but not limited to the following:
Labour and materials.
Building in of miscellaneous items provided by others.
Staging and scaffolding.
Cleaning.

### 102 Related Work

Co-operate and co-ordinate with the following trades:

| | |
|---|---|
| Timber windows | Doors and door frames |
| Metal windows | Structural steel |
| Concrete | |

### 103 Quality Assurance

Approved samples: at the start of brick laying, arrange with the project manager to designate a beginning section of each type of face brickwork not less than 6 courses high x 1200 long as the control sample. When approved by the project manager, the section/s become the control standard/s for brickwork and remain part of work.

### 104 References

Comply with applicable portions of the following Australian Standards:

| | |
|---|---|
| AS 1316 2003 | Masonry cement. |
| AS/NZS 1576 | Scaffolding. *There are 6 parts, 1991 – 2010 and 1 Amdt, 1992.* |
| AS 1672.1 1997 | Limes and limestones – Limes for building. |
| AS/NZS 2904 1995 | Damp-proof courses and flashings. *Plus 2 Amdts, 1998, 2013.* |
| AS 3700 2011 | Masonry structures. *There is 1 Supplement 2012.* |

### 105 Submissions

A. Submissions required with tender:
   Name of proposed manufacturer of bricks.
B. Submissions required prior to ordering:
   1. Product data: showing the following information where appropriate:
      a. Manufacturer's name and product details including a designation of proposed types and sizes.
      b. Other
   2. Samples: submit if requested by the project manager.
C. Submissions required prior to delivery:
   1. Four of each type of face brick to represent the range of colours, textures and surface, arris and shape irregularities.
   2. Other.

### 106 Delivery, Handling and Storage

Co-ordination: reach agreement with the project manager about site provision for storage of sand, cement and other materials and for mixing of mortar.
Deliver, handle and store products in accordance with manufacturer's recommendations and prevent damage, deterioration or loss.

## PART II MATERIALS

### 201 Bricks

| **Type (Name):** | | **Type (Name):** | |
|---|---|---|---|
| Colour: | | Colour: | |
| Size: | | Size: | |
| | | | |
| Specials: | | Vents: | |
| Shape: | | Shape: | |
| Colour: | | Colour: | |
| Size: | | Size: | |

### 202 Mortar and Grout Materials and Types

A. Materials: comply with AS 3700 as follows:
   1. Mortar: restrict the amount of fine aggregate passing a 75 micron test sieve to 5% maximum.

2. Grout:
3. Pigment: powdered metallic oxides used in accordance with the manufacturer's instructions.
4. Refractory mortar: approved refractory mortar, treated as recommended by the manufacturer.

B. Types: comply with AS 3700, providing materials in the proportions described below:
1. Mortar:

| Classification | Mix Proportions (by volume) Type A Portland Cement | Building Lime | Sand |
|---|---|---|---|
| M1 | 0 | 1 | 3 |
| M2 | 1 | 2 | 9 |
| | 1 | 2 | 8 |
| M3 | 1 | 1 | 6 |
| | 1 | 0 | 5 |
| M4 | 1 | 0.5 | 4.5 |

.
Mortar for load bearing brickwork: M3 (M4) (M2)
Mortar for grouted and reinforced brickwork: M3 (M4)
Mortar for non-load bearing brickwork: M3 (M4) (M2)
Mortar for repair of lime mortar brickwork: M1 (M2)
Mortar for bagging:
Same mortar as used for laying.
M3 mortar.
M3 mortar, with powdered metallic oxide pigment added to achieve a dry colour approved by the project manager.

Mortar for bagging:
Same mortar as used for laying.
M3 mortar.
M3 mortar, with powdered metallic oxide pigment added to achieve a dry colour approved by the project manager.
2. Grout: f'c not less than 12 MPa AS 3700.

**203 Miscellaneous Materials**

Comply with AS 3700 as follows:

A. Wall ties and accessories:
Where building is to be located within 10 kilometres of the coast wall ties:
B. Reinforcement:
C. Lintels and other steel in brickwork:
Extend lintels 230mm minimum past each jamb of openings.
D. Caulking: elastomeric sealing compound, coloured to match mortar; for general caulking including movement control joints:
Liquid polysulphide polymer.
Neutral silicone
E. Head Restraint:
100 x 100 x 6 x 450 long mild steel angle masonry anchored to concrete soffit on either side of wall, at 1000 maximum centres.

F. Damp-proof courses:
G. Flashings:
Note: both to comply with AS/NZS 2904.
H. Expansion joint material:
I. Control joint material:

**204 Steel Lintels**

A. Where brickwork is to be supported over openings and no special lintels are detailed, build in mild steel lintels, in accordance with the Building Code of Australia.
B. Set angles with the first dimension vertical.
C. Hot dip galvanise steel lintels in exterior openings.
D. Fix angles to concrete columns or beams with the bearing leg cut and bent to the height of the vertical leg and bolted to concrete with 2 no. 16mm masonry anchors.

## PART III EXECUTION

**301 Mortar Mixing**

Measure materials to ensure that the specified mix proportions are maintained as per AS 3700.
Mix in a suitable mixing machine until a uniform blending of the components is achieved.
Add water to create a mix that is as wet as can be conveniently used by the bricklayer.
Except for the previously specified methyl cellulose water thickener, use no chemical to affect the plastic or other properties of mortar or as a substitute for lime without the project manager's permission.

**302 Mortar Life**

Re-tempering to replace water lost by evaporation is encouraged until initial set begins. Reject mortar which has begun its initial set and do not re-temper.

**303 Preparation**

Ensure scaffolding, when provided is heavy duty type and compliant with the scaffolding code of practice and Australian Standards.
Review the project with other trades in relation to ducts, piping, conduits, thimbles, sleeves, etc. or other item penetrating or to be built into brickwork and co-ordinate their installation.
Obtain built-in items from their suppliers prior to starting brickwork.
Clean the surface of concrete before laying bricks thereon.
Set up pressed metal door frames plumb and level and brace as required. Maintain bracing until walls are at least 1000 high and frame grouting has set.

**304 Laying**

General: comply with applicable provisions of AS 3700. Set out brickwork so as to reduce cutting to a minimum and, in facework, to avoid irregular or broken bond.
Make cuts in facework with a masonry saw.
Carefully position openings for other trades to eliminate cutting.
Build in accordance with the dimensions, thicknesses and heights shown on drawings, plumb, level and in the designated position within the tolerances of AS 3700.
Allow no part to rise more than 1000mm above adjacent unfinished work. Rake back advanced work, build brickwork in bond and avoid toothing wherever possible.
Build in as necessary reinforcements, arch bars, lintels, frames, straps, bolts, lugs, wall ties, metalwork, damp-proof courses and flashings, etc.
Provide weepholes 1200 mm apart over damp-proof course and flashings where these span across cavities.
Re-lay, in fresh mortar, bricks accidentally moved after initial laying.
Keep mortar stains to a minimum and protect horizontal ledges, finished sills and the like from mortar droppings as work proceeds.
Before mortar sets hard, remove excess mortar. Scrub brickwork within 24 hours of laying using a bristle brush plus detergent if necessary.
Protect new and incomplete brickwork with coverings, temporary bracing or the like - AS 3700.

**305 Jointing and Finishing**

Joint thickness: 10mm within the tolerances given in AS 3700.
Joint finish brickwork for plaster: cut off flush.
Face brickwork:
Bagged finish: spread the mortar on exposed external/internal surfaces with a brush, sponge float, rough cloth or other suitable device and then rub to achieve a uniform texture approved by the project manager.
Protect adjacent surfaces as necessary and promptly remove bagging mortar spilt, splashed or otherwise lodged on them.
Carry out bagging as the work proceeds.
Carry out bagging as a separate operation after bricklaying has been completed.

**306 Bonding and Tying**

Build work in stretcher bond.
Space wall ties in accordance with AS 3700.
Keep cavities clean and free from mortar droppings.
Fix to concrete or steel columns and at junction with concrete walls with frame ties built at least 250mm into brick joint and fix to the structure as close as possible to the course line.

**307 Door Frames**

Build in door frames as the work proceeds. Generally allow for lugs at 400 to 450mm centres except FU door frames which have lugs to sizes and centres required by the fire test report pertaining to the particular type of door. Grout solid cavities behind frames.

**308 Incidental Work**

Chases: refer to AS 3700, and, as far as possible, provide for chases to be made as the work rises. No horizontal chase may exceed 1200mm in length and no vertical chase may be closer than 600mm to an element providing lateral support. No chase may be more than 1/3 of the thickness of the wall.
Perform miscellaneous incidental brickwork as required throughout and for other trades. Make good after other trades.

**309 Field Quality Control**

A. Tests.

Have the following tests performed in a laboratory NATA registered for the particular test. Supply copies of the resulting test certificates to the project manager.

| TEST: | TEST METHOD: |
|---|---|
| For mortar: sampling method | Refer structural engineer |

| TEST: | TEST METHOD: |
|---|---|
| Chemical composition | |
| Other | |
| For brickwork: compressive strength | AS 3700 Appendix A |
| Bond strength | |
| Characteristic strength | AS 3700 Appendix B |
| Other | |

B. Test frequency.
For mortar:
For special masonry:
For other masonry:

**310 Cleaning of Facework**

Take care to keep walls clean constantly. Should further cleaning be necessary, use hydrochloric acid not stronger than 5%, treating only a small area at one time. Wet the wall prior to applying the acid, work from the top down and thoroughly wash off after brushing. Do not leave acid solution on wall at stoppage of work.

**311 Completion**

Complete contracted work in accordance with contract documents and written variation orders issued by the project manager.
On completion, clean up mortar droppings, debris, etc., remove scaffolding, make good put-log holes and blemishes and leave work in a first class condition.
Protect facework surfaces where necessary to avoid damage during other building operations.

**END OF SECTION**

## PART I GENERAL

### 101 Scope

General: supply and build the blockwork shown on the drawings or needed to complete the blockwork including, but not limited to the following:
Labour and materials.
Building in of miscellaneous items provided by others.
Staging and scaffolding.
Cleaning.

### 102 Related Work

Co-ordinate and co-operate with the following trades:

| | |
|---|---|
| Structural steel | Doors and door frames |
| Concrete | Fire-rated doors and door frames |

### 103 Quality Assurance

Provide manufacturer's certification that blocks supplied are of the specified type and strength and were manufactured in accordance with current Australian Standard.
Approved samples: at the start of blocklaying, arrange with the project manager to designate a beginning section of each type of facework not less than 6 courses high x 1200 long as the control sample/s.
When approved by the project manager, the sample/s will become the control standard/s for blockwork and remain part of work.

### 104 References

Comply with applicable portions of the following Australian Standards:

| | |
|---|---|
| AS 1316 2003 | Masonry cement. |
| AS/NZS 1576 | Scaffolding. *There are 6 parts, 1991 – 2010 and 1 Amdt, 1992.* |
| AS 1672.1 1997 | Limes and limestones – Limes for building. |
| AS/NZS 2699 | Built-in components for masonry construction. *There are 3 parts, 2000 – 2002.* |
| AS 2701 2001 | Methods of sampling and testing mortar for masonry constructions. |
| AS/NZS 2904 1995 | Damp-proof courses and flashings. *Plus 2 Amdts, 1998, 2013.* |
| AS 3700 2011 | Masonry structures*. There is 1 Supplement 2012* |

### 105 Submissions

A. With tender: name of proposed block manufacturer.
B. Prior to ordering:
  1. Product data: showing the following information where appropriate:
    a. Manufacturer's name and product details including a designation of proposed types and sizes.
    b. Schedule of lintels.
    c. Other.
  2. Samples: submit if requested by the project manager.
C. Submissions required prior to delivery:
  2 of each type of unit described below.

### 106 Delivery, Handling and Storage

Co-ordination: reach agreement with the project manager about site provisions for storage of sand, cement and other materials and for the mixing of mortar.
Deliver, handle and store products in accordance with manufacturer's recommendations and prevent damage, deterioration or loss.

## PART II MATERIALS

### 201 Blocks

Machine made pre-cast concrete units with sharp arrises, free from distortion, cracks and other defects, uniform in colour and texture.
Supply hollow blocks except where otherwise specified or required.
Supply solid blocks where core holes would otherwise be visible or where required for fire-rating or other purposes. Match colour and texture of solid and hollow blocks in facework.
Supply matching half-blocks, half-height blocks, closers and lintel and bond beam blocks as required.
A. Strength Grade: 12 (other)
B. Colour:
C. Sizes and types:

### 202 Mortar and Grout Materials and Types

A. Materials: comply with AS 3700 as follows:
  1. Mortar: restrict the amount of fine aggregate passing a 75 micron test sieve to 5% maximum.

2. Grout:
3. Pigment: powdered metallic oxides used in accordance with the manufacturer's instructions.

B. Types: comply with AS 3700, providing materials in the proportions described below:
1. Mortar:

| Classification | Mix Proportions (by volume) Type A Portland Cement | Building Lime | Sand |
|---|---|---|---|
| M1 | 0 | 1 | 3 |
| M2 | 1 | 2 | 9 |
| | 1 | 2 | 8 |
| M3 | 1 | 1 | 6 |
| | 1 | 0 | 5 |
| M4 | 1 | 0.5 | 4.5 |

Mortar for loadbearing blockwork: M3 (M4) (M2)
Mortar for grouted and reinforced blockwork: M3 (M4)
Mortar for non-loadbearing blockwork: M3 (M4) (M2)

Mortar for bagging:
Same mortar as used for laying.
M3 mortar.
M3 mortar, with powdered metallic oxide pigment added to achieve a dry colour approved by the project manager.
2. Grout: f'c not less than 12 MPa (AS 3700, Section 10.7).

**203 Miscellaneous Materials**

A. Comply with AS 3700 as follows:
B. Wall ties and accessories:
C. Reinforcement:
D. Lintels and other steel in blockwork:
Extend lintels 230mm minimum past each jamb of openings.
E. Caulking: elastomeric sealing compound coloured to match mortar; for general caulking including movement control joints:
Liquid polysulphide polymer equal to Thioseal 5000.
Neutral silicone equal to Dow Corning 790.
F. Head restraint:
100 x 100 x 6 mild 450 long steel angle masonry anchored to concrete soffit on either side of wall.
Proprietary anchor equal to Brunswick Sales Pty Ltd, Phone No. (03) 9768 3111 Fax No. (03) 9768 2913, MFA4/1 or MFA4/M/B at 1000 maximum centres.
G. Damp-proof courses: Refer AS 3700.
H. Flashings:
Note: both to comply with AS/NZS 2904.
I. Expansion joint material: Refer AS 3700.
J. Control joint material:

**204 Steel Lintels**

A. Where blockwork is to be supported over openings and no special lintels are detailed, build in mild steel lintels, in accordance with the Building Code of Australia.
B. Set angles with the first dimension vertical.
C. Hot dip galvanised steel lintels in exterior openings.
D. Fix angles to concrete columns or beams with the bearing leg cut and bent to the height of the vertical leg and bolted to concrete with 2 x 16mm masonry anchors.

## PART III EXECUTION

**301 Mortar Mixing**

Measure materials to ensure that the specified mix proportions are maintained as per AS 3700.
Mix in a suitable mixing machine until a uniform blending of the components is achieved.
Add water to create a mix that is as wet as can be conveniently used by the blocklayer.
Except for the previously specified methyl cellulose water thickener, use no chemical to affect the plastic or other properties of mortar or as a substitute for lime without the project manager's permission.

**302 Mortar Life**

Re-tempering to replace water lost by evaporation is encouraged until initial set begins. Reject mortar which has begun its initial set and do not re-temper.

**303 Preparation**

Ensure scaffolding, if required is heavy duty type and compliant with the scaffolding code of practice and relevant Australian Standards.

Review the project with other trades in relation to ducts, piping, conduits, thimbles, sleeves, etc. or other item penetrating or to be built into blockwork and co-ordinate their installation.
Obtain built-in items from their suppliers prior to starting blockwork.
Clean the surface of concrete before laying blocks thereon.
Set up pressed metal door frames plumb and level and brace as required. Maintain bracing until walls are at least 1000 high and frame grouting has set.

**304 Laying**

General: comply with applicable provisions of AS 3700. Set out blockwork so as to reduce cutting to a minimum and, in facework, to avoid irregular or broken bond.
Make cuts in facework with a masonry saw.
Carefully position openings for other trades to eliminate cutting.
Build in accordance with the dimensions, thicknesses and heights shown on drawings, plumb, level and in the designated position within the tolerances of AS 3700.
Allow no part to rise more than 1000mm above adjacent unfinished work. Rake back advanced work, build blockwork in bond and avoid toothing wherever possible.
Build in as necessary reinforcements, arch bars, lintels, frames, straps, bolts, lugs, wall ties, metalwork, damp-proof courses and flashings, etc.
Re-lay, in fresh mortar, blocks moved after initial laying.
Keep mortar stains to a minimum and protect horizontal ledges, finished sills and the like from mortar droppings as work proceeds.
Before mortar sets hard remove excess mortar. Scrub blockwork within 24 hours of laying using a bristle brush plus detergent if necessary.
Protect new and incomplete blockwork with coverings, temporary bracing or the like - AS 3700.

**305 Jointing and Finishing**

Joint thickness: 10mm within the tolerances given in AS 3700:
Joint finish blockwork for plaster: cut off flush.
Face blockwork:
Bagged finish: spread the mortar on exposed external/internal surfaces with a brush, sponge float, rough cloth or other suitable device and then rub to achieve a uniform texture approved by the project manager.
Protect adjacent surfaces as necessary and promptly remove bagging mortar spilt, splashed or otherwise lodged on them.
Carry out bagging as the work proceeds.
Carry out bagging as a separate operation after blocklaying has been completed.

**306 Bond Beams**

Provide bond beams to block walls.
Where possible, form bond beams continuous with lintels. Reinforce with mild steel rods bent as required to follow wall pattern. Lap a minimum of 400mm at joints and corners and tie with 18 swg wire.
Provide clear space between rods and block shell and fill block with concrete as specified, compacted into the block and finished flush at top. Where block cavity leaves insufficient space for concrete infilling, grout with 1:2.5 cement: sand mortar.

**307 Lintels, General**

Refer to AS 3700, Table F4 of appendix F.
Lintels may be of steel or reinforced masonry units, subject to approval of project manager.
Build in steel lintels: Refer to specification in PART II, Clause 203 and 204.

**308 Lintels, Concrete Masonry**

Build block lintels occurring to heads of openings in block walls. Form with standard bond beam blocks of a thickness to suit the leaf and extend a minimum of 1 full block on either side of jamb or further as required to suit bonding. Allow for cutting of blocks needed to suit height of openings.
Reinforcement: reinforce with structural grade mild steel bar in accordance with the following schedule:

| Width of Bond Beam/Lintel | Span Reinforcing |
|---|---|
| 90mm | Maximum 1000mm 1/12mm bar |
| 140mm | Maximum 1800mm 1/16mm bar |
| Other: | |

Bond beam grout: fill with 30MPa concrete.
Where block lintels abut walls or columns, support on mild steel angle bracket, welded or bolted to wall or column.

**309 Bonding and Tying**

Build work in stretcher bond.
Space wall ties in accordance with AS 3700.
Keep cavities clean and free from mortar droppings.
Fix to concrete or steel columns and at junction with concrete walls with frame ties built at least 250mm into block joint and fix to the structure as close as possible to the course line.

**310 Door Frames**

Build in door frames as the work proceeds. Generally allow for lugs at 400 to 450mm centres except FU door frames which have lugs to sizes and centres required by the fire test report pertaining to the particular type of door. Grout solid cavities behind frames.

**311 Incidental Work**

Chases: refer to AS 3700, and, as far as possible, provide for chases to be made as the work rises. No horizontal chase may exceed 1200mm in length and no vertical chase may be closer than 600mm to an element providing lateral support. No chase may be more than 1/3 of the thickness of the wall.
Perform miscellaneous incidental blockwork as required throughout and for other trades. Make good after other trades.

**312 Field Quality Control**

Tests.
Have the following tests performed in a laboratory NATA registered for the particular test. Supply copies of the resulting test certificates to the project manager.

| **TEST:** | **TEST METHOD:** |
|---|---|
| For mortar: sampling method | Refer structural engineer |
| Chemical composition | |
| Other: | |
| For blockwork: | |
| Compressive strength | |
| Bond strength | |
| Characteristic strength | |
| Other: | |

**313 Cleaning of Facework**

Take care to keep walls clean constantly. Should further cleaning be necessary, use hydrochloric acid not stronger than 5%, treating only a small area at one time. Wet the wall prior to applying the acid, work from the top down and thoroughly wash off after brushing. Do not leave acid solution on wall at stoppage of work.

**314 Completion**

Complete contracted work in accordance with contract documents and written variation orders issued by the project manager.
On completion clean up mortar droppings, debris, etc., remove scaffolding, make good put-log holes and blemishes and leave work in a first class condition.
Protect facework surfaces where necessary to avoid damage during other building operations.

**END OF SECTION**

## PART I GENERAL

### 101 Scope

Supply and install a complete installation of autoclaved aerated concrete blocks as shown on the drawings or needed to complete the blockwork including, but not limited to the following:
All labour and materials.
Building in other materials.
Staging and scaffolding.
Cleaning.

### 102 Related Work

Co-ordinate and co-operate with the following trades:

| | |
|---|---|
| Concrete | Structural steel |
| Carpentry | Wall construction |
| Floor construction | Door frames |
| Window frames | Finishes |
| Cement render | Textured finish |

### 103 Quality Assurance

A. Appoint an on-site representative trained by material supplier to be responsible for the training of the workmen performing the work of this section.
As a condition of supply, the manufacturer of all blocks, adhesives and surface coatings will be required to inspect the on-site construction of the sample wall and of the first batch of each type of block and laying condition. The manufacturer/supplier will be required to certify in writing to the project manager that the preparation and application procedures are in accordance with the manufacturer's product literature and have not in any respect breached the block or adhesive manufacturer's warranty. This certification will identify the location and date of the inspection, the products used and include copies of the relevant manufacturer's printed instructions.
Following certification, do not vary the methods of preparation and installation from those certified by the manufacturer/supplier.

B. Approved samples:
Submit samples of blocks to be used and obtain approval from the project manager before ordering materials.

C. Sample wall:
At the start of block laying, arrange with the project manager to designate a beginning section of each type of wall construction not less than 1.8 square metres in area as the control sample/s.
When approved by the project manager, the section/s will become the control standard/s for the remaining work and remain part of the work.

D. A suitably qualified engineer, consultant, will certify drawings and the specifications for this project.

### 104 References

Comply with applicable portions of the following Australian and other Standards:

| | |
|---|---|
| AS/NZS 1170 | Structural design actions.<br>*There are 5 parts, several Supplements and Amdts, 2002 – 2011.* |
| AS/NZS 2699 | Built-in components for masonry construction. *There are 3 parts, 2000 - 2002.* |
| AS/NZS 2904 1995 | Damp-proof courses and flashings. *Plus 2 Amdts, 1998, 2013.* |
| AS 3700 2011 | Masonry structures*. There is 1 Supplement 2012* |
| BS 5628 2005 | Code of practice for the use of masonry.<br>BS 5628-2 Structural use of reinforced and prestressed masonry.<br>BS 5628-3 Code of practice for use of masonry. Materials and components, design and workmanship. *There is 1 other part, 2005.* |

Cement Concrete and Aggregates Association of Australia. “Articulated Walling”. Document available at www.concrete.net.au/publications
Comply with the requirements of local and statutory authorities.

### 105 Submissions

A. With tender: name of proposed block manufacturer.
B. Prior to ordering:
   1. Product data: showing the following information where appropriate:
      a. Manufacturer's name and product details including a designation of proposed types and sizes.
      b. Schedule of lintels.
      c. Other:
   2. Samples: submit if requested by the project manager.
C. Submissions required prior to delivery:
   2 of each type of unit described below. Refer clause 202.

**106 Delivery, Handling and Storage**

Arrange with builder for the time of delivery of materials and the location of placement.
Deliver, handle and store materials in accordance with manufacturer's recommendations and prevent damage, deterioration or loss.

## PART II MATERIALS

**201 Acceptable Manufacturers**

**202 Materials**

A.A.C. Concrete block: solid, size:
Mortar: for base or bottom course laid on concrete strip footing or floor slab:1 part cement, 1 part lime, 6 parts sand. Comply with AS 3700.
Damp-proof course: polyethylene, textured
Flashings:
Wall ties: as AS 3700,
Reinforcement: as AS 3700,
Expansion joint:
Other materials:
Render: 1 part cement, 1 part lime, 8 parts sand.

**203 Lintels**

Standard lintels
To all areas as marked by project manager’s drawing/Window Schedule, supply block manufacturer's AAC pre-manufactured lintels. Design lintels in accordance with manufacturer's standard load design tables with a minimum end bearing of 200mm depending on the length of the lintel.
Non-standard lintels
Obtain engineer's computations for non-standard lintels. Submit a copy of all non-standard lintel calculations to the relevant authority.
Provide AAC lintels in their original form and under no circumstances are they to be cut on site in any manner.

## PART III EXECUTION

**301 Examination**

Inspect site conditions before start of work on site. Rectify conditions where necessary before start of work. Start of work means total acceptance of conditions.

**302 Preparation**

Ensure scaffolding, if required, is heavy duty type and compliant with the scaffolding code of practice and Australian Standards.
Prepare surfaces to receive blockwork in accordance with the material manufacturer's instructions.
Review the project with other trades in relation to ducts, piping, conduits, thimbles, sleeves, etc. or other item penetrating or to be built into blockwork, and co-ordinate their installation.
Obtain built-in items from their suppliers prior to starting blockwork.
Set up door frames plumb and level and brace as required. Maintain bracing until walls are at least 1000 high and frame grouting has set where applicable.

**303 Mortar Mixing**

Measure materials to ensure that the specified mix proportions are maintained as per AS 3700.
Mix in a suitable mixing machine until a uniform blending of the components is achieved.
Add water to create a mix that is as wet as can be conveniently used by the blocklayer.
Use no chemical to affect the plastic or other properties of mortar or as a substitute for lime without the project manager's permission.

**304 Mortar Life**

Re-tempering to replace water lost by evaporation is encouraged until initial set begins. Reject mortar which has begun its initial set and do not re-temper.
Lay mortar no thicker than 20mm under first only course of blocks.

**305 Laying**

Comply with AAC block manufacturer's written instructions, current edition.
To all external perimeter walls, and other walls subject to moisture, apply an approved damp-proof course being of a plastic sheet type membrane. Lay membrane prior to the thick bed (first course) mortar being of no more than 20mm in thickness.
Obtain a true and level course.
General: Comply with applicable provisions of AS 3700 and manufacturer’s current instructions. Set out blockwork so as to reduce cutting to a minimum. Apply thin bed adhesives using recommended notched trowel to obtain an even distribution of the minimum recommended thickness of adhesive, to joints and perpends.

Install blockwork in a format so that the vertical joint of the lower course is staggered at least 100mm relative to the vertical joint of the overlaying course.
Perform all operations necessary for the proper execution of the work, such as cutting, corbelling, chasing, beam-filling, bonding and making good.
Build in as necessary all flashings, reinforcements, arch bars, lintels, frames, straps, bolts, lugs, wall ties, metalwork, damp-proof courses, precast units, sills, partitions, joists and the like.
Carefully set out and leave openings for other trades to eliminate cutting.

**306 Control Joints**

Provide control joints in accordance with engineer’s recommendations.
Install control joints at no more than 6-8 lineal metres apart.
Saw cut each joint of a minimum depth of 25mm or of an articulated joint form. Use sliding expansion ties in articulated joints, located at 600mm centres (usually every third course).
Install all lintels using thick bed mortar to bearing ends.
Install ACC lintels in their true form and under no circumstances are they to be cut on site in any manner.

**307 Sub-Grade Applications**

To areas below ground level, finish with an impervious bituminous waterproof sealant to all sub-grade walls.
Install membrane as per manufacturer's recommendations in accordance with AAC current manufacturer's requirements.

**308 Waterproofing Walls**

Refer block manufacturers’ current written instructions.

**309 Tolerances**

Maximum planar misalignment is to be 2mm along butt joints. Do not vary the thickness and width of blocks by more than 5mm from design sizes. Deviation from plumb, level or dimensioned angle is not to exceed 5mm per 3.5m of length of any plane, or 6mm in any total run in any line. Deviation from theoretical position on plan or elevation, including deviation from plumb, level or dimensioned angle, is not to exceed 9mm total at any location. Do not exceed 3mm for any 3.5m run in any direction when there is a change in deviation.

**310 Rejection Criteria**

The AAC blockwork is liable to rejection if:
A joint has been made at a location or in a manner not in accordance with this specification.
Items embedded in blocks or jointing material have been displaced from their correct position.
Blockwork has cracks.
The work can be shown to be otherwise defective.
The project manager may permit blockwork liable to rejection to be retained on the following basis:
A structural investigation proves satisfactory.
Additional tests prove satisfactory.
Approved remedial work.
Repair of damaged units.
Demonstrate the proposed repair methods to the project manager and obtain his acceptance of the method in writing.
The repaired work is to have the same appearance and durability of similar undamaged work.

**311 Cleaning**

Take care at all times to keep walls clean. Remove excess adhesive progressively. Clean strictly in accordance with manufacturers' instructions.

**312 Completion**

Complete contracted work in accordance with contract documents and written variation orders issued by the project manager.
On completion clean up mortar droppings, debris, etc., remove scaffolding, make good put-log holes and blemishes and leave work in a first class condition.
Protect facework surfaces where necessary to avoid damage during other building operations.

**END OF SECTION**

## PART I GENERAL

**101 Scope**

Supply the stone and clad the building as shown on the drawings, including but not limited to the following:
Labour and materials.
Waterproof membrane
Wall ties
Cleaning.

**102 Related Work**

Co-operate and co-ordinate with the following trades:

| | |
|---|---|
| Stud framing | Window and door frames |
| Structural steel | Concrete |

**103 Quality Assurance**

Approved sample: at the start of stone cladding, arrange with the project manager to designate a beginning section of stone cladding of about 3 metres x 2.5 metres high, including a door or window jamb, as the control sample. When approved by the project manager, the section become the control standard for the remaining work and stays part of the work.

**104 References**

Comply with applicable portions of the following Australian Standards:

| | |
|---|---|
| AS 1316 2003 | Masonry cement. |
| AS/NZS 1576 | Scaffolding. *There are 6 parts, 1991 – 2009 and 2 Amdts, 1992.* |
| AS 1672.1 1997 | Limes and limestones – Limes for building. |
| AS/NZS 2904 1995 | Damp-proof courses and flashings. *2 Amdts, 1998, 2013.* |
| AS 3700 2011 | Masonry structures*. There is 1 Supplement 2012* |

**105 Submissions**

A. Submissions required with the tender:
   Name of stone supplier.
   Name of stone mason.
B. Sample of stone cut to suitable size.
C. Copies of minutes of pre-installation conference.

**106 Delivery, Handling and Storage**

Co-ordination: reach agreement with the project manager about site provision for storage of sand, cement and other materials and for mixing of mortar.
Deliver, handle and store products in accordance with manufacturer's recommendations and prevent damage, deterioration or loss.

## PART II MATERIALS

**201 Stone Supplier**

**202 Stone**

| **Type (Name):** | |
|---|---|
| Colour: | |
| Size: | |
| Finish | |

**203 Mortar and Grout Materials and Types**

A. Materials: comply with AS 3700 as follows:
   1. Mortar: restrict the amount of fine aggregate passing a 75 micron test sieve to 5% maximum.
   2. Grout:
   3. Pigment: powdered metallic oxides used in accordance with the manufacturer's instructions.
B. Types: comply with AS 3700, providing materials in the proportions described below:
   1. Mortar:

| **Classification** | **Mix Proportions (by volume) Type A Portland Cement** | **Building Lime** | **Sand** |
|---|---|---|---|
| M3 | 1 | 1 | 6 |

.

   2. Grout: f'c not less than 12 MPa AS 3700.

**204 Miscellaneous Materials**

Comply with AS 3700 as follows:

A. Wall ties and accessories:
Where building is to be located within 10 kilometres of the coast wall ties:

B. Reinforcement:

C. Lintels and other steel in masonry:
Extend lintels 230mm minimum past each jamb of openings.

D. Caulking: elastomeric sealing compound, coloured to match mortar; for general caulking including movement control joints:
Liquid polysulphide polymer.
Neutral silicone

E. Damp-proof courses: Viscourse embossed 0.2mm polymeric film at jambs, sills, heads.

F. Flashings: Viscourse embossed 0.2mm polymeric film at jambs, sills, heads.
Note: both to comply with AS/NZS 2904.

G. Expansion joint material (control joint): polysulphide.

**205 Steel Lintels**

A. Where stonework is to be supported over openings and no special lintels are detailed, build in mild steel lintels, in accordance with the Building Code of Australia.

B. Set angles with the first dimension vertical.

C. Hot dip galvanise steel lintels in exterior openings.

D. Fix angles to concrete columns or beams with the bearing leg cut and bent to the height of the vertical leg and bolted to concrete with 2 no. 16mm masonry anchors.

## PART III EXECUTION

**301 Mortar Mixing**

Measure materials to ensure that the specified mix proportions are maintained as per AS 3700.
Mix in a suitable mixing machine until a uniform blending of the components is achieved.
Add water to create a mix that is as wet as can be conveniently used by the stone mason.

**302 Mortar Life**

Re-tempering to replace water lost by evaporation is encouraged until initial set begins. Reject mortar which has begun its initial set and do not re-temper.

**303 Preparation**

Ensure scaffolding, if required, is heavy duty type and compliant with the scaffolding code of practice and Australian Standards.
Review the project with other trades in relation to ducts, piping, conduits, thimbles, sleeves, etc. or other item penetrating or to be built into masonry and co-ordinate their installation.
Obtain built-in items from their suppliers prior to starting masonry.
Clean the surface of concrete before laying bricks thereon.
Set up pressed metal door frames plumb and level and brace as required. Maintain bracing until walls are at least 1000 high and frame grouting has set.

**304 Laying**

General: comply with applicable provisions of AS 3700. Set out masonry so as to reduce cutting to a minimum and, in facework, to avoid irregular or broken bond.
Make cuts in facework with a masonry saw.
Carefully position openings for other trades to eliminate cutting.
Build in accordance with the dimensions, thicknesses and heights shown on drawings, plumb, level and in the designated position within the tolerances of AS 3700.
Allow no part to rise more than 1000mm above adjacent unfinished work. Rake back advanced work, build masonry in bond and avoid toothing wherever possible.
Build in as necessary reinforcements, arch bars, lintels, frames, straps, bolts, lugs, wall ties, metalwork, damp-proof courses and flashings, etc.
Provide weepholes 1200 mm apart over damp-proof course and flashings where these span across cavities.
Re-lay, in fresh mortar, bricks accidentally moved after initial laying.
Keep mortar stains to a minimum and protect horizontal ledges, finished sills and the like from mortar droppings as work proceeds.
Before mortar sets hard, remove excess mortar. Scrub masonry within 24 hours of laying using a bristle brush plus detergent if necessary.
Protect new and incomplete masonry with coverings, temporary bracing or the like - AS 3700.

**305 Jointing and Finishing**

Joint thickness: 10mm generally.
Rake joints to depth as approved by project manager in approved sample. Remove mortar droppings from cavities.

**306 Wall Ties**

Space stainless steel wall ties at 600 mm horizontally and 300 – 400 vertically, depending on size of stone.

**307 Door and Window Frames**

Build in as the work proceeds. Provide lugs at 400 to 450mm centres.

**308 Cleaning of Facework**

Take care to keep walls clean constantly. Should further cleaning be necessary, use hydrochloric acid not stronger than 5%, treating only a small area at one time. Wet the wall prior to applying the acid, work from the top down and thoroughly wash off after brushing. Do not leave acid solution on wall at stoppage of work.

**309 Completion**

Complete contracted work in accordance with contract documents and written variation orders issued by the project manager.

On completion, clean up mortar droppings, debris, etc., remove scaffolding, make good put-log holes and blemishes and leave work in a first class condition.

Protect facework surfaces where necessary to avoid damage during other building operations.

**END OF SECTION**

## PART I GENERAL

### 101 Scope

Supply all labour and material, services and equipment necessary for the preparation, application and finishing of metal surfaces as indicated on drawings, schedules and as specified herein, to internal and external metal surfaces as follows:
Refer Schedule of Finishes.

### 102 Related Work

Co-ordinate and co-operate with the following trades:

| | |
|---|---|
| Metalwork | Structural steel |
| Metal door frames and fire doors | Metal windows |
| Metal decking and roof plumbing | |

### 103 Quality Assurance

A contractor with wide experience in this class of work is required for the work of this section.

### 104 References

Comply with applicable portions of the following Australian Standards:

| | |
|---|---|
| AS 1231 2000 | Aluminium and aluminium alloys - Anodic oxidation coatings. |
| AS 1627 | Metal finishing - Preparation and pre-treatment of surfaces. |
| | 1627.6 2003 Chemical conversion treatment of metals. |
| | *There are 6 other parts, 1997 – 2005.* |
| AS 2832 | Cathodic protection of metals. *There are 5 parts, 2003 – 2008.* |
| AS 3715 2002 | Metal finishing - Thermoset powder coating for architectural applications of aluminium and aluminium alloys. |

### 105 Submissions

Submit the following materials:

A. Product literature on all proposed finishing systems.
B. Colour samples for all approved finishing materials. Provide samples identified with:
   1. Manufacturer's colour code and colour name.
   2. Match to schedule colour code and name.
C. Samples not less than 100 x 100mm and of the same gloss level as the scheduled colour.

### 106 Delivery, Handling and Storage

Handle all materials with care.
Do not store on site.
Install directly in place.

### 107 Warranty

Provide a written warranty stating the preparation of surfaces, materials and material application under this contract will show no deterioration and remain in good condition for a period of years from date of Practical Completion.

## PART II MATERIALS

### 201 Materials – General

Where manufacturer makes more than one grade of any material specified, use the highest grade of each type, whether or not the material is mentioned by trade name in these specifications.

### 202 Metal Finishes

A. Anodising
   Anodise to colour selected and approved by the project manager. Pre-treat and apply anodising by applicators approved by the project manager.
   Minimum coating thickness of 25 microns subjected to random testing after installation. Remove and replace non-conforming material.
B. Polyester powdercoat
   Apply polyester powdercoat, to colour approved by the project manager to metal surfaces specified.
   Perform pre-treatment and application of powder coating by applicators approved by the project manager and by the manufacturer of the powder material.
   Minimum coating thickness of 50 microns subjected to random testing after installation. Remove and replace non-conforming material.
C. Fluoroset FP (Dulux Product).

**203 Schedule**

| Finish | Manufacturer | Colour | Surfaces | Applied to |
|---|---|---|---|---|
| | | | | |
| | | | | |

## PART III EXECUTION

**301 Examination**

Inspect all surfaces and determine that they are in proper condition to receive the work to be performed under this section.

The starting of work under this section means acceptance of such surfaces as being satisfactory and any defects in work resulting from accepting poor surfaces are to be corrected at no cost to the proprietor.

**302 Preparation**

A. General: prepared to a standard not less than that described in AS 1627.

B. Clean base metal surfaces of all mill scale, rust, grease, oil, dirt or other foreign matter then properly wash with spirit or other approved cleaning agents.
After cleaning, etch, pickle or prepare as recommended by manufacturer of the finish applied.

**303 Protection**

Protect finished metal surfaces as necessary during handling, transport and erection to prevent mechanical imperfections such as scratches, scrapes, dents, spots, stains and streaks.

Do not use adhesive protective coating. Protect by other means with the approval of the project manager.

**304 Application**

Execute all work in this section in strict compliance with the manufacturer's recommendations and with the provisions of the Australian Standards which are incorporated by reference as part of this specification and apply to the work in this section to same extent as if written herein. In the event of conflict between manufacturer's recommendations and the provisions of the Australian Standards, manufacturer's recommendations govern.

**305 Cleaning**

At completion of work, keep and maintain finished surfaces clean and free from dust, dirt and other foreign matter.

**306 Completion**

Complete all contracted work in accordance with contract documents and written variation orders issued by the project manager.

**END OF SECTION**

## PART I GENERAL

### 101 Scope

Supply, fabricate and install a complete structural steel system including but not limited to:
Steelwork shown on the project manager/engineer's drawings specified herein, or as described in his instructions issued during the currency of the work. It includes surface treatment, storage, delivery to the site, steel to steel connections and their fastenings, steel to concrete and their fastenings, miscellaneous attachments and anchor bolts.
Erection of the steelwork shown on the project manager/engineer's drawings and includes off-loading, erection, field welding, making steel to steel connections, connection to anchor bolts, permanent grouting and repairs to surface treatment.

### 102 Related Work

Co-ordinate and co-operate with the following trades:

### 103 Quality Assurance

Do work in accordance with the drawings and specifications which form part of this contract, and further details and/or instructions issued by the project manager/engineer during the currency of the works.
Submit evidence of experience appropriate to the class of work required. Install under the direct supervision of a capable foreman, experienced in the class of work under construction.

### 104 References

Conform to the latest edition, including amendments, of the following Australian Standards (except where varied by this specification or the contract drawings):

| | | |
|---|---|---|
| AS/NZS 1554 | Structural steel welding. | |
| | 1554.1 2011 | Welding of steel structures. |
| | 1554.2 2003 | Stud welding (steel studs to steel). *Plus 1 Amdt 2003.* |
| | 1554.3 2008 | Welding of reinforcing steel. |
| | 1554.4 2010 | Welding of high strength quenched and tempered steels. |
| | 1554.5 2011 | Welding of steel structures subject to high levels of fatigue loading. |
| | 1554.6 2012 | Welding stainless steels for structural purposes. |
| | 1554.7 2006 | Welding of sheet steel structures. |
| AS 1627 | Metal finishing - Preparation and pre-treatment of surfaces. *There are 7 parts, 1997 – 2005.* | |
| AS/NZS 3678 2011 | Structural steel - Hot rolled plates, floorplates and slabs. | |
| AS/NZS 3679 | Structural steel. | |
| AS/NZS 3750 | Paints for steel structures. *There are 24 parts, 1994 – 2009.* | |
| AS 4100 1998 | Steel structures *Plus 1 Supplement, 1999, 1 Amdt 2012.* | |
| AS/NZS 4600 2005 | Cold-formed steel structures. *Plus 1 Amdt, 2010.* | |
| AS/NZS 4673 2001 | Cold-formed stainless steel structures. | |
| AS/NZS 4680 2006 | Hot dip galvanised (zinc) coatings on fabricated ferrous articles. | |
| HB 48 1999 | Steel structures design handbook. | |

### 105 Delivery, Handling And Storage

Handle and store materials by methods and appliances that will not over-stress or deform the members.
Separate materials on site from surface of ground.
Members bent or buckled from handling or storing will be liable to rejection.
Supply bolts, nuts and washers in grit-free containers and stored in water-tight premises. Reject burred, damaged, corroded or otherwise unserviceable bolts.

## PART II MATERIALS

### 201 Materials

General
Supply materials required to complete the works under this trade section in accordance with the contract documents and within the tolerances specified. Materials which do not comply will be rejected.
Steel supply
Unless otherwise shown on the drawings, comply with AS/NZS 3678 and AS/NZS 3679. Do not use other types and grades of steel without written approval.

### 202 Shop Drawings

Refer DOCUMENT 00800 SUPPLEMENTARY CONDITIONS OF CONTRACT, clause 27. Provide a complete set of shop drawings for required components.

**203 Fabrication**

Fabricate finish in accordance with AS 4100.

Do not exceed the end clearances shown on the drawings. Where these are not shown, ascertain the clearances used in the design of the connections.

**204 Connections**

A. General

Supply end cleats, brackets and other connections, not specifically detailed on the drawings, to suit the location and forces shown thereon with gauge and edge distances in accordance with AS 4100.

B. Bolting General

Supply bolts in bearing of such lengths that no threaded portion crosses the interface of the parts joined. Place at least one washer under the bolt head or nut, whichever is to be rotated. Provide taper washers where the part under the bolt head or nut is not perpendicular to the centre-line of the bolt.

C. Welding

Do manual welding in accordance with AS/NZS 1554.

Do semi-automatic welding in accordance with AS/NZS 1554.

D. Miscellaneous Attachments

Allow for the drillings, cleat and other fitments indicated on the contract drawings or shown on other relevant drawings and required by other trades.

Be entirely responsible for supply of necessary information to the steel fabricator.

**205 Hot Dip Galvanising**

Where scheduled or specified galvanised steel after chemical descaling in accordance with AS 1627 and AS/NZS 4680, so that rust, mill scale, oil grease and other foreign matter is removed leaving a clean surface of metal.

Then immerse steel in a bath of molten zinc so that when withdrawn, the zinc coating solidifies to a dry film thickness in compliance with AS/NZS 4680.

Reinstate transport and erection abrasions, site welds, etc., by thoroughly wire brushing affected areas to achieve a clean sound substrate and patch coating with a zinc-rich paint with a film thickness of 100 microns.

**206 Surface Treatment of Steel**

Clean steelwork free from loose rust, loose mill scale, dirt, oil and grease or by sand-blasting - Class 2.5. Apply a coat of inorganic zinc silicate, 100 microns thick. Refer AS 1627.

**207 Inspection Before Delivery**

Material and work is subject to inspection before painting and delivery. Provide the necessary access and facilities.

Where steel has been inspected at the shop before being delivered to the site, such inspection does not relieve the contractor of his responsibility to carry out the work in accordance with the drawings and this specification.

## PART III EXECUTION

**301 Examination**

Inspect site conditions both before fabrication and delivery of steel.

Ensure that on delivery, materials can be directly installed.

Report discrepancies immediately they are found and instruction obtained before continuing with the affected portion of the work.

Start of work means total acceptance of conditions.

**302 Erection**

Comply with the requirements of AS 4100 and relevant codes of practice, i.e. code of practice for cranes etc. Develop an erection plan and implement erection procedure developed as Safe Work Method Statement such that members can be placed and fixed in position without distortion or harm to workers installing them..

Make safe, during erection, against wind and erection stresses and loading conditions, including those due to erection equipment.

Allow for the cost of temporary erection bracing required and of the engineer's requirements in connection with such bracing.

**303 Grouting of Baseplates**

Set plates to precise level at centre of footing for future baseplate placement.

Set plate in high strength mortar.

After placement of column base plates, grout fill the void completely.

Trim the grout on completion.

**304 Inspection on Site**

Advise engineer and/or project manager when erected steel is ready for inspection.

**305 Adjustments**

Following erection, adjust the installation as required by engineer.

Touch up abraded or missing paint areas. Refer next clause.

**306 Cleaning**

Clean the installed steelwork and touch up with zinc-rich primer paint of matching colour.
Ensure that the touch up paint is compatible with the factory applied material.

**307 Completion**

Complete contracted work in accordance with contract documents and written variation orders issued by the project manager.

**END OF SECTION**

## PART I GENERAL

### 101 Scope

Design, engineer, supply and install a complete cold formed metal framing, including but not limited to:
Load bearing wall framing
Non-loadbearing wall framing
Loadbearing roof framing
Other

### 102 Related Work

Co-ordinate and co-operate with the tradesmen preparing floors, installing windows and doors and weatherproofing material, including casting in of anchors where required.

### 103 Quality Assurance

A. Manufacturer qualifications: not less than 6 years continuous experience in the manufacture of the product types specified.
B. Installer Qualifications: installer is to have not less than 3 years continuous experience in the erection of specified material.

### 104 References

Comply with applicable portions of the following Australian Standards:

| | | |
|---|---|---|
| AS/NZS 1170 | Structural design actions. | |
| | 1170.1 2002 | Permanent, imposed and other actions. *Plus 2 Amdts,2005 – 2009.* |
| | 1170.2 2011 | Wind actions. |
| | 1170.3 2003 | Snow and ice actions. *Plus 1 Amdt, 2007.* |
| | 1170.4 2007 | Earthquake actions in Australia. |
| | *There is 1 other part, several Supplements and Amdts, 2002 – 2011.* | |
| AS/NZS 1554 | Structural steel welding. | |
| | 1554.1 2011 | Welding of steel structures. |
| | 1554.2 2003 | Stud welding (steel studs to steel) *Plus 1 Amdt, 2003.* |
| | 1554.3 2008 | Welding of reinforcing steel. |
| | 1554.4 2010 | Welding of high strength quenched and tempered steels. |
| | 1554.5 2011 | Welding of steel structures subject to high levels of fatigue loading. |
| | 1554.6 2012 | Welding stainless steels for structural purposes. |
| | 1554.7 2006 | Welding of sheet steel structures. |
| AS 3623 1993 | Domestic metal framing. | |

Comply with relevant authority's requirement for fire.

### 105 Submissions Required Prior to Fabrication

A. Complete system description including the following information:
   1. Names of manufacturers of products.
   2. Names, addresses and telephone numbers of local representatives for products.
   3. Types, model numbers and names of products, and indication whether products are "off the shelf" or custom fabricated. Include specific information on finishes - thicknesses, patented process name, process description and test data.
   4. Detailed information on products manufactured specifically for this project.
   5. Detailed system description including standard details and manufacturer's literature; and large-scale details of specially fabricated products.
B. Statement that the proposed system meet(s) the regulatory requirements, thermal, aesthetic and wind loading, construction, warranty requirements specified; noting in detail exceptions.
C. Shop Drawings: refer DOCUMENT 00800 SUPPLEMENTARY CONDITIONS OF CONTRACT, clause 27. Provide Shop Drawings showing the following information where appropriate to the items:
   1. Layout (sectional plan and elevation of complete assembly).
   2. Full size section of members.
   3. Methods of assembly, type and location of exposed screws.
   4. Methods of installation, including fixings, anchorage, flashings.
   5. Provision for expansion (thermal).
   6. Junctions and trim to adjoining surfaces.
   7. Fittings and accessories.
D. Engineer's calculations on wind loading, live and dead loads.

### 106 Delivery, Handling and Storage

Handle materials with care. Do not store on site. Install directly in place as instructed by manufacturer. Where possible, deliver pre-assembled panels of framing, roof trusses etc., ready for immediate placement and connection.

## PART II MATERIALS

**201 Acceptable Manufacturers**

The following manufacturers of frames are acceptable:

**202 Materials**

Wall, floor and roof framing components manufactured from corrosion resistant steel materials.
Match components detailed on drawings or an alternative approved in writing by the project manager.

**203 Structural Criteria**

Adopt Terrain Category:
Refer AS/NZS 1170.
Wind loading: design:
Frame assemblies to suit the static and dynamic wind forces as indicated on the tables in the AS/NZS 1170.
Structural members of units of such strength that when tested at the specified design wind values they do not deflect by an amount greater than span/240 and do not cause permanent deflection.
Fix members so that the above loading is generated in the members without stress causing failure or movement becoming evident at any joint.
Movement: permit free and noiseless movement of the components due to thermal effects, structural effect, wind pressure, effect of dead loads, without strain to the frames, without buckling of components and without excessive stress to members or assemblies.
Contact with other materials: coat metal surfaces in contact with mortar, concrete, plaster, masonry, wet-application of fire-proofing and absorbent materials with an anti-galvanic, moisture barrier material. Isolate, with inert material, dissimilar metals for the prevention of electrolytic action and corrosion.
Distortion: design the assembly to minimise visual distortion.

**204 Detail Design Provisions**

A. General: the project manager's drawings are to be considered essentially schematic except for profiles of exposed surfaces and panel arrangement where indicated. If, in the opinion of the builder a change of profile is required in order to meet the specification, arrange through the project manager for a review of the condition. Design the assembly, reinforcing and anchorage to suit each specified condition in an acceptable manner complying with the requirements specified herein.

B. Tolerances: design frames to accommodate building tolerances, and when completed, within the following tolerances:
   1. Deviation from plumb, level or dimensioned angle within 3mm per 3.5m of length of member, or 6mm in total run in line.
   2. Deviation from theoretical position on plan or elevation, including deviation from plumb, level or dimensioned angle not to exceed 9mm total at location.
   3. Change in deviation not to exceed 3mm for 3.5m run in direction.

**205 Fabrication**

Form junctions so that no fixings, such as pins, screws, pressure indentations and the like are visible on exposed faces. Show on Shop Drawings fixings which will be exposed. Cut edges, drill holes, rivet joints and clean flat sheets, neat, free from burrs and indentations. Remove sharp edges without excessive deformation.
Fit mitred joints accurately to a fine hairline.
Pre-assemble and match mark before delivery.

## PART III EXECUTION

**301 Examination**

Inspect site conditions before start of work on site, before delivery of materials. Ensure conditions are satisfactory for installation.
Perform rectification required before delivery of materials.
Start of work means total acceptance of conditions.

**302 Preparation**

Ensure tasks and activities comply with the requirements of the Act, Regulation, Code of Practice and relevant Australian Standards.
Prepare surfaces affected by the installation in accordance with material manufacturer's instructions.

**303 Frame Anchorage**

Fabricator is required to supply the anchorage devices to the builder for building in by others and check that devices are located as required to suit the requirements of the fabrication for positive and permanent fixing.
Insulation: isolate dissimilar metals at interfaces with bitumen based or nylon shim materials to prevent galvanic action.
Make good concrete or masonry damaged during the installation of masonry anchors at no cost to the proprietor.

**304 Installation**

Wall frames: vertical. Permitted maximum tolerance is 3mm in 3000mm.
Floor frames: horizontal. Permitted maximum tolerance is 3mm in 3000mm.
Except where otherwise directed.
Secure in place in accordance with manufacturer's instructions.

**305 Cleaning**

Debris: remove rubbish and debris resulting from the fabrication and erection operations, each day.

**306 Completion**

Complete contracted work in accordance with contract documents and written variation orders issued by the project manager.

**END OF SECTION**

## PART I GENERAL

### 101 Scope
Supply, engineer and install required general and architectural metalwork items including but not limited to:

### 102 Related Work
Co-ordinate and co-operate with the following trade sections:

### 103 Quality Assurance
Work of this section will be performed by experienced craftsmen familiar with the quality required in this class of work.
Comply throughout with manufacturer's instructions.

### 104 References
Comply with applicable portions of the following Australian Standards:

| | |
|---|---|
| AS/NZS 1554 | Structural steel welding. *There are 7 parts, 1994 – 2012.* |
| AS 1627 | Metal finishing - Preparation and pre-treatment of surfaces. |
| | 1627.6 2003 Chemical conversion treatment of metals. |
| | *There are 6 other parts, 1997 – 2005.* |
| AS/NZS 1734 1997 | Aluminium and aluminium alloys - Flat sheet, coiled sheet and plate. |
| AS/NZS 1866 1997 | Aluminium and aluminium alloys - Extruded rod, bar, solid and hollow shapes. |
| AS 4100 1998 | Steel structures. *Plus 1 Supplement 1999, 1 Amdt 2012.* |
| AS/NZS 4673 2001 | Cold-formed stainless steel structures. |
| AS/NZS 4680 2006 | Hot-dip galvanised (zinc) coatings on fabricated ferrous articles. |

Comply with requirements of statutory and local authorities.

### 105 Shop Drawings
Comply with DOCUMENT 00800 SUPPLEMENTARY CONDITIONS OF CONTRACT, clause 27.
Provide Shop Drawings for major items supplied hereunder.

A. Contract drawings and details provided are indicative as to general and minimum requirements, and do not show conditions.
   Develop details not shown and in conformity with the indicative details shown.
B. Take and confirm dimensions on site, before preparing Shop Drawings where possible.
C. Submit detailed Shop Drawings for fabrication and installation of major metalwork. Show plans, elevations and detailed sections; indicate materials, finishes, types of joinery, fasteners, anchorages and accessory items. Provide setting diagrams and full-scale templates of blocking, anchorages, sleeves and bolts installed by others.

### 106 Samples
Sample welds: if requested, provide samples of weld types, including samples of railings joined at right angles and at typical acute angles, welded and ground smooth, for approval. If not acceptable, provide additional samples until approved. Approved samples establish quality of similar work of this section.
Check on delivery: request project manager to check materials on delivery to site for quality, and materials not meeting the requirements of this specification or equal to approved samples will be rejected.
Return rejected materials to the fabricator at the fabricator's expense.
Finish: provide samples of specified finishes when requested.

## PART II MATERIALS

### 201 Materials

| Item | Manufacturer | Material | Size(s) | Model No. | Finish |
|---|---|---|---|---|---|
| | | | | | |
| | | | | | |

### 202 Finish
Materials exposed to weather may be either:
Mild steel - hot dipped galvanised after fabrication or chromate pre-treated followed by polyester powder coating.
Finish internal steel after fabrication with zinc-rich organic primer, or with inorganic zinc silicate paint.
Comply with relevant codes of practice or manufacturers' recommendations.

### 203 Welding Steel
General: details of joints, the techniques of welding employed, the appearance and quality of welds made and the methods used to correct defective work; conform to requirements of AS/NZS 1554.
Welds exposed to view: grind smooth to project manager's approval.
Concealed welds: grind smooth before galvanising.

Tack or skip welding: at regular intervals, very neat. Not permitted if material is to be hot dip galvanised. Remove weld spatter.
Certification: only welders who have previously been qualified by tests may weld.
Tack welding or skip welding will NOT be permitted where items are to be galvanised. Weld continuously form joints and connections to exclude water and to permit draining during galvanising.
Stainless steel welding: refer AS/NZS 1554.

**204 Connection Design**

General: design fabricated items so that possible work is done before delivery. Fully protect for shipment. Take possible care to prevent damage.

A. Welding external items: conform to the recommendations of AS/NZS 1554, noting particularly the design criteria.
B. Flanges: concealed where possible. Sleeve connecting railings inside railing sections and secure with flush or set screws. Except where access is impossible, connection screws and bolts will be on the underside of joints.
C. Fasteners on the top of railing sections will not be permitted.
D. Weld shop connections for steel fabrications, and bolt field connections.
E. Provide smooth finishes to exposed surfaces with sharp well-defined lines and arrises. Mill to a close fit machined joints. Design necessary lugs, brackets and similar items so that work can be assembled and installed in a neat, substantial manner.
F. Provide ample strength and stiffness by using appropriate metal thickness of assembly and supports.
G. Provide holes and connections as required to accommodate the work of other trades and for site assembly of metalwork. Drill or punch and ream in the shop.

**205 Miscellaneous**

Fasteners: provide required bolts, screws, inserts, fasteners, templates and other accessories required for a complete installation.
Co-ordinate with other trades as to the proper fastening systems suitable for the substrates to which the item is to be secured. Refer to project manager if in doubt.
Fasten galvanised items with galvanised fasteners.

**206 Dissimilar Metals**

In moist environments, e.g. swimming pools of either fresh water or sea water etc., prevent totally contact between dissimilar metals (any metals).
This instruction takes priority over any drawing, detail or instruction and will prevent cathodic reaction between the metals.
Refer this instruction to the structural engineer.

## PART III EXECUTION

**301 Examination**

Inspect site conditions before fabrication, where possible, and before delivery of materials. Ensure conditions are satisfactory for installation. Arrange for rectification required.
Start of work means total acceptance of relevant conditions.

**302 Preparation**

Field measurements: do not delay job progress. Allow for adjustments and fitting of the work in the field where taking of measurements might cause delay.
Co-ordination with work of others: furnish to each relevant trade foreman anchorages and setting drawings, diagrams, templates and instructions for installation of items having integral anchors which are to be embedded in concrete or masonry construction. Co-ordinate delivery of such items to the project site.

**303 Inspection and Reinstatement**

Check fabrications as they are unloaded at the project site for evidence of physical damage.
Treat damaged fabrications as follows:

A. Damage through galvanising: perform immediate inorganic zinc silicate paint or cold-galvanising repair. Do not install until reinstated.
B. Architectural metalwork: returned to shop for repair or replacement.

Verify anchors, bolts and other required anchorage items for proper size and accurate location prior to erection.

**304 Installation**

Ensure tasks and activities comply with the Act, Regulation, Code of Practice or relevant Australian Standards,
Anchorage: except for anchorages furnished herein but placed by other trades, set and secure necessary anchorages, including concrete and masonry inserts, bolts, wood screws and other connectors as needed.
Perform cutting, drilling and fitting as needed, locating anchorages and holes to ensure proper positioning of completed work.
Fit: during installation and assembly, form tight joints with exposed connections accurately fitted, and reveals uniform. Finish work accurately, plumb, level, square and true in reference to adjacent construction. Make tolerances conform to Australian Standards.
Finish: do not cut or abrade shop finishes which cannot be completely restored in the field.

The use of gas-cutting torch in the field for correcting fabrication errors will not be permitted under conditions.
Fabrications may be cut shorter with power hacksaws on site.
Isolate dissimilar metals likely to be subject to moisture with inert materials, not visible on completion of installation.

**305 Field Quality Control**

Where considered necessary by the project manager, arrange for the manufacturer of products to instruct installers regarding correct installation.

**306 Protection**

Cover work: immediately following installation, wrap or cover architectural metalwork to avoid wear and tear of finish during subsequent construction.

**307 Cleaning**

Clean materials installed to the satisfaction of the project manager.
Remove temporary protective coatings.

**308 Completion**

Complete contracted work in accordance with contract documents and written variation orders issued by the project manager.

**See Schedule of Metalwork at end of document.**

**END OF SECTION**

## PART I GENERAL

### 101 Scope

Design, fabricate, supply and install a complete system of metal stairs and handrails including but not limited to:
Treads and risers.
Landings.
Balustrading and handrails.
Openings through floors.
Painting or pre-finishing.
Installation.
Prefabricated spiral stairs.
Ladders.

### 102 Related Work

Co-ordinate and co-operate with the following trades:

| | |
|---|---|
| Floor and wall framing | Metalwork |
| Painting | Metal finishes – Shop applied |
| Floor coverings | |

### 103 Quality Assurance

A. Manufacturer qualifications: not less than 10 years continuous experience in the manufacture of the product types specified.

B. Installer qualifications: installer is to have not less than 5 years continuous experience in the erection of specified material.

### 104 References

Comply with applicable portions of the following Australian Standards:

| | | | |
|---|---|---|---|
| AS/NZS 1170 | Structural design actions. | | |
| | 1170.0 2002 | General principles. *Plus 5 Amdts, 2003 – 2011.* | |
| | 1170.1 2002 | Permanent imposed and other actions. *Plus 2 Amdts, 2005 – 2009.* | |
| | 1170.2 2011 | Wind actions. | |
| | *There are 2 other parts, several Supplements and Amdts, 2002 – 2011.* | | |
| AS 1428 | Design for access and mobility. | | |
| | 1428.1 2009 | General requirements for access – New building work. | |
| | *There are 5 other parts. 1992 – 2010.* | | |
| AS 1657 2013 | Fixed platforms, walkways, stairways and ladders – Design, construction and installation. | | |
| AS/NZS 1664 | Aluminium structures. *There are 2 parts, 2 Supplements and 4 Amdts, 1997-1999.* | | |
| AS 3715 2002 | Metal finishing - Thermoset powder coating for architectural applications of aluminium and aluminium alloys. | | |

Comply with requirements of statutory and local authorities.

### 105 Submissions Required Prior to Fabrication

A. Complete system description including the following information:
   1. Names of manufacturers of products.
   2. Names, addresses and telephone numbers of local representatives for products.
   3. Types, model numbers and names of products, and indication whether products are "off the shelf" or custom fabricated. Include specific information on finishes - thicknesses, patented process name, process description and test data.
   4. Detailed information on products manufactured specifically for this project.

B. Statement that the proposed system meet(s) the regulatory requirements, certificate of accreditation, computations, design loading, construction, and warranty requirements specified; noting in detail exceptions.

C. Shop Drawings: refer DOCUMENT 00800 SUPPLEMENTARY CONDITIONS OF CONTRACT, clause 27. Provide Shop Drawings showing the following information where appropriate to the items:
   1. Layout (sectional plan and elevation of complete assembly).
   2. Methods of fabrication, type and location of welded and screwed joints.
   3. Methods of installation, including fixings, anchorage, support.
   4. Junctions and trim to adjoining surfaces.
   5. Fittings and accessories.

D. Engineer's calculations on dead and live loading.

### 106 Delivery, Handling and Storage

Handle finished fabricated components with care. Do not store on site. Install directly in place.

## PART II MATERIALS

**201 Acceptable Manufacturers**
The following manufacturers are acceptable:

**202 Materials**
Stair treads, balustrades, handrails:
Refer detail drawings.

**203 Finish**
Mild steel - hot dipped galvanised after fabrication or chromate pre-treated followed by polyester powder coating.
Finish internal steel after fabrication with zinc-rich organic primer, or with inorganic zinc silicate paint.
Comply with relevant codes of practice or manufacturer's recommendations.

**204 Detail Design Provisions**
General: the project manager's drawings are to be considered essentially schematic except for profiles of exposed surfaces and stair arrangement where indicated. If, in the opinion of the builder a change of profile is required in order to meet the specification, arrange through the project manager for a review of the condition.
Design the assembly, to suit each specified condition in an acceptable manner complying with the requirements specified herein.

## PART III EXECUTION

**301 Examination**
Inspect site conditions before start of work on site, and before ordering of materials. Ensure all conditions are satisfactory for installation. Measure at the site immediately before fabrication.
Start of work means total acceptance of conditions.

**302 Fabrication**
Provide factory fabricated stair and balustrade/handrail sections generally as indicated on drawings, in complete or multiple sections, as permitted by transport or access.

**303 Fixings**
Provide fixings as follows:
Base plates to concrete with expanding masonry anchorage fixings.
Base plates to timber with coach screws.

**304 Tubular Handrails**
Provide to situations shown on detail drawings, tubular handrails of the sections indicated, neatly stop ended, fixed to handrail posts by retractable pins.

**305 Installation**
Ensure tasks and activities comply with the Act, Regulation, Code of Practice or Australian Standards, as relevant.
Assemble treads, handrail and stair components in the position indicated or the stairwell provided. Join mechanically on site without site welding. Adjust to suit floor to floor heights with factory cut spacers only.
Ensure every surface is smooth with no fixings which could damage hands.

**306 Painting**
Finish exposed metalwork not galvanised or pre-finished with paint as indicated in Schedule of Finishes.

**307 Completion**
Complete contracted work in accordance with contract documents and written variation orders issued by the project manager.

**END OF SECTION**

## PART I GENERAL

**101 Scope**

Design, fabricate, supply and install exterior and interior handrail, and rails (which form a balustrade ) including but not limited to:
Metal pipe handrails and railings.
Associated material e.g. glass panels.
Solid metal handrails and railings.
Timber handrails and railings.

**102 Related Work**

Co-ordinate and co-operate with the following other trades:

| | |
|---|---|
| Floor construction | Carpentry |
| Wall construction | Metal work |
| Concrete | Metal finishes – Shop applied |

**103 Quality Assurance**

A. Manufacturer qualifications: not less than 10 years continuous experience in the manufacture of the product types specified.
B. Installer qualifications: installer is not to have less than 5 years continuous experience in the erection of specified material.

**104 References**

Comply with applicable portions of the following Australian Standards:

| | |
|---|---|
| AS/NZS 1554 | Structural steel welding. *There are 7 parts, 1994 – 2012.* |
| AS 1627 | Metal finishing - Preparation and pretreatment of surfaces. |
| | 1627.6 2003 Chemical conversion treatment of metals. |
| | *There are 6 other parts, 1997 - 2005* |
| AS 4100 1998 | Steel structures. *Plus 1 Supplement, 1999, 1 Amdt 2012.* |
| AS/NZS 4673 2001 | Cold-formed stainless steel structures. |

Comply with requirements of statutory and local authorities.

## PART II MATERIALS

**201 Acceptable Manufacturers**

**202 Materials**

A. Metal:
B. Timber:
C. Glass:

**203 Finish**

**204 Fabrication**

Before delivery to site, pre assemble where possible all items to ensure proper fit and dimension of each item. Disassemble and pack carefully for shipping to the site. On delivery and unloading, inspect for damage and arrange immediate replacement if necessary.

**205 Source Quality Control**

Advise project manager when material is ready for inspection before delivery. Arrange for project manager to inspect each item and indicate approval or otherwise by marking a check list of every item required for the project.

## PART III EXECUTION

**301 Examination**

Inspect site conditions before fabrication, where possible, and before delivery of materials. Ensure conditions are satisfactory for installation. Arrange for rectification required.
Start of work means total acceptance of relevant conditions.

**302 Preparation**

A. Field measurements: do not delay job progress. Allow for adjustments and fitting of the work in the field where taking of measurements might cause delay.
B. Co-ordination with work of others: furnish to each relevant trade foreman anchorages and setting drawings, diagrams, templates and instructions for installation of items having integral anchors which

are to be embedded in concrete or masonry construction. Co-ordinate delivery of such items to the project site.

**303 Inspection and Reinstatement**

A. Check fabrications as they are unloaded at the project site for evidence of physical damage. Treat damaged fabrications as follows:
   1. Damage through galvanising: perform immediate inorganic zinc silicate paint or cold-galvanising repair. Do not install until reinstated.
   2. Architectural metalwork: returned to shop for repair or replacement.

B. Verify anchors, bolts and other required anchorage items for proper size and accurate location prior to erection.

**304 Installation**

A. Ensure tasks and activities comply with the Act, Regulation, Code of Practice or Australian Standards, as relevant.

B. Anchorage: except for anchorages furnished herein but placed by other trades, set and secure necessary anchorages, including concrete and masonry inserts, bolts, wood screws and other connectors as needed. Perform cutting, drilling and fitting as needed, locating anchorages and holes to ensure proper positioning of completed work.

C. Fit: during installation and assembly, form tight joints with exposed connections accurately fitted, and reveals uniform. Finish work accurately, plumb, level, square and true in reference to adjacent construction. Make tolerances conform to Australian Standards.

D. Finish: do not cut or abrade shop finishes which cannot be completely restored in the field.
   The use of gas-cutting torch in the field for correcting fabrication errors will not be permitted under conditions. Fabrications may be cut shorter with power hacksaws on site.
   Isolate dissimilar metals likely to be subject to moisture with inert materials, not visible on completion of installation.

**305 Field Quality Control**

Where considered necessary by the project manager, arrange for the manufacturer of products to instruct installers regarding correct installation.

**306 Protection**

Cover work: immediately following installation, wrap or cover architectural metalwork to avoid wear and tear of finish during subsequent construction.

**307 Cleaning**

Clean materials installed to the satisfaction of the project manager.
Remove temporary protective coatings.

**308 Completion**

Complete contracted work in accordance with contract documents and written variation orders issued by the project manager.

**END OF SECTION**

## PART I GENERAL

### 101 Scope

Design, engineer, supply and install glass balustrades including but not limited to:
Structural design.
Metal frames.
Glass.
Painting or pre-finishing.
Installation.

### 102 Related Work

Co-ordinate and co-operate with the following trades:

| | |
|---|---|
| Concrete | Structural steel |
| Carpentry | Metal windows and glazing |
| Ceramic tile | Stainless steel in marine environments |

### 103 Quality Assurance

Installer qualifications: not less than 3 years' experience in the installation of glass balustrades of the product types specified.

### 104 References

Comply with applicable portions of the following Australian Standards:

| | |
|---|---|
| AS 1231 2000 | Aluminium and aluminium alloys – Anodic oxidation coatings. |
| AS 1288 2006 | Glass in buildings - Selection and installation.<br>*Plus 1 Supplement, 2006 and 2 Amdts, 2008 - 2011.* |
| AS 1627 | Metal finishing - Preparation and pretreatment of surfaces.<br>*There are 7 parts, 1997 – 2005.* |
| AS 1657 2013 | Fixed platforms, walkways, stairways and ladders – Design, construction and installation. |
| AS 2047 1999 | Windows in buildings - Selection and installation. *Plus 2 Amdts 2001.* |
| AS 3715 2002 | Metal finishing - Thermoset powder coating for architectural applications of aluminium and aluminium alloys. |

Comply with requirements of statutory and local authorities.

### 105 Submissions Required Prior to Fabrication

A. Complete system description including the following information:
Names of manufacturers of products.
Names, addresses and telephone numbers of local representatives for products.
Types, model numbers and names of products, and indication whether products are "off the shelf" or custom fabricated. Include specific information on finishes - thicknesses, patented process name, process description and test data.
Detailed information on products manufactured specifically for this project.
Detailed system description including standard details and manufacturer's literature; and large-scale details of specially fabricated products.

B. Statement that the proposed system meet(s) the regulatory requirements, thermal and aesthetic criteria and wind loading, construction, glazing and warranty requirements specified; noting in detail exceptions.

C. Shop drawings: refer DOCUMENT 00800, clause 27. Provide shop drawings showing the following information where appropriate to the items:
Layout (sectional plan and elevation of complete assembly).
Full size section of members.
Methods of assembly, type and location of exposed screws.
Methods of glazing.
Methods of installation, including fixings, anchorage, caulking, flashings.
Provision for expansion (thermal).
Junctions and trim to adjoining surfaces.
Fittings and accessories.

D. Engineer's calculations on wind loading.

### 106 Delivery, Handling and Storage

Handle materials with care. Do not store on site. Install directly in place. Store sealants as instructed by manufacturer.

### 107 Warranty

Provide to the proprietor a warranty, counter-signed by the installer, on the whole of the installation, which states that work will remain intact and fully operational for the period of not less than years after date of Practical Completion.

## PART II MATERIALS

**201 Acceptable Manufacturers**

The following manufacturers are acceptable:

**202 Materials**

Metal frames:
Frames: extruded aluminium components manufactured from aluminium alloy 6063, temper T5 or T6.
Stainless steel: Type 304 or 316, CHS.
Match components detailed on drawings or an alternative approved in writing by the project manager.
Glass: refer clause 206.

**203 Structural Criteria**

Consult structural engineer. Obtain written approval of the design in relation to material choice, sizes, thickness and connections.

**204 Finish**

Anodising or Polyester powder coat.

A. Anodising:
Metal of windows, doors and shop fronts anodised to selected colour.
Pre-treat and apply anodising by applicators approved by the project manager.
Minimum coating thickness of 25 microns subjected to random testing after installation. Remove and replace non-conforming material.
Comply with requirements of AS 1231.

B. Polyester powder coat:
Polyester powdercoated, to colour approved by the project manager and by the manufacturer of the powder material, to metal of windows, doors and shop fronts.
Perform pre-treatment and application of powder coating by applicators approved by the project manager and by the manufacturer of the powder material.
Minimum coating thickness of 50 microns subjected to random testing after installation. non-conforming material will be removed and made good by the Builder.
Comply with requirements of AS 3715.

C. Stainless steel:
Refer section 05040 STAINLESS STEEL IN MARINE ENVIRONMENTS.

**205 Glass**

Material: Armourview Armourfloat, Pilkington 12 (or 15) thick.

**206 Other Materials**

Setting blocks: neoprene 100 long, 750 apart.
Grout: refer supplier.
Silicone sealant: neutral curing clear.
Metal rails, posts, base channel: aluminium, stainless steel.
Bolts through glass: stainless steel, “Planar” fittings, (Pilkington).
Refer Pilkington technical advisory service, www.pilkington.com/en/au

**207 Fabrication**

Comply with AS 2047.
Framing system: fabricate with materials to profiles shown on approved shop drawings.
Form junctions so that no fixings, such as pins, screws, pressure indentations and the like are visible on exposed faces. Show on shop drawings fixings which will be exposed. Cut edges, drill holes, rivet joints and clean flat sheets, neat, free from burrs and indentations. Remove sharp edges without excessive deformation.
Fit mitred joints accurately to a fine hairline.
Pre-assemble and match mark before delivery.

## PART III EXECUTION

**301 Examination**

Inspect site conditions before start of work on site, before delivery of materials. Ensure conditions are satisfactory for installation.
Ensure tasks and activities comply with the Act, Regulation, Code of Practice or Australian Standards, as relevant.
Perform rectification required before delivery of materials.
Start of work means total acceptance of conditions.

**302 Preparation**

Prepare surfaces affected by the installation in accordance with material manufacturer's instructions.

**303 Frame Anchorage**

Fabricator is required to supply the anchorage devices to the builder for building in by others and check that devices are located as required to suit the requirements of frame fabrication for positive and permanent fixing.
Insulation: isolate dissimilar metals at interfaces with bitumen based or nylon shim materials to prevent galvanic action.
Make good concrete or masonry damaged during the installation of masonry anchors at no cost to the proprietor.

**304 Frame Installation**

Secure the frame to the structure as shown by project manager and/or structural engineer.

**305 Glazing**

Secure glass in accordance with glass manufacturer's recommendations and AS 1288. Allow for thermal expansion of glass, the metal framing and spandrels.

**306 Preparation for Sealants**

Joint preparation sealants: clean joint surfaces immediately before installation of sealant or caulking compound. Remove dirt, insecure coatings, moisture and other substances which could interfere with bond of sealant or caulking compound. Etch concrete and masonry joint surfaces as recommended by sealant manufacturer. Roughen vitreous and glazed joint surfaces if recommended by sealant manufacturer.
Prime or seal joint surfaces where indicated, and where recommended by sealant manufacturer. Do not allow primer/sealer to spill or migrate on to adjoining surfaces.

**307 Protection**

A. Framing system: protect metal surfaces as necessary during erection. Finish surfaces free from mechanical imperfections such as scratches, scrapes, dents, spots, stains and streaks.
B. Glass: protect glass from breakage immediately upon installation and until Practical Completion. Remove and replace glass and metal panels which are broken, cracked, abraded, chipped or damaged in other ways, before, during or after installation, at no additional cost to proprietor.
C. Be responsible for breakage and damage to installation until Practical Completion.

**308 Cleaning**

A. Remove labels, excess glazing compounds, stains, spots and other foreign matter from glass, frames, hardware and other finished surfaces immediately upon installation of glazing.
B. Debris: remove rubbish and debris resulting from glazing operations, each day.

**309 Completion**

Complete contracted work in accordance with contract documents and written variation orders issued by the project manager.

**END OF SECTION**

## PART I GENERAL

**101 Scope**

Provide materials and labour, equipment and services and perform operations necessary to complete the carpentry as indicated and specified. Include nailers, blocking, furring, grounds, hardware, framing, shoring, bracing, ramps, scaffolding and barriers required by the drawings and construction.

**102 Related Work** Co-operate and co-ordinate with the following trades:

**103 Quality Assurance**

Prototype: at a location selected by the project manager on site, construct a full size prototype of:

Include in each prototype elements required by this specification, and finish in every respect. When approved by the project manager, such samples remain part of the work and become the standard for the remaining work.

**104 References**

Comply with applicable portions of the following Australian Standards:

| | | |
|---|---|---|
| AS 1428 | Design for access and mobility. | |
| | 1428.1 2009 | General requirements for access – New building work. |
| | *There are 5 other parts. 1992 – 2010.* | |
| AS 1684 | Residential timber-framed construction. *There are many parts and Supplements, 1999 - 2010.* | |
| | 1684.2 2010 | Non-cyclonic areas. *Numerous supplements, 2 Amdts 2012 and 2013* |
| | 1684.3 2010 | Cyclonic areas. *Numerous supplements, Amdt 2012* |
| | 1684.4 2010 | Simplified - Non-cyclonic areas*. Special reprint with Amdt 1 2012 included* |
| AS 1720 | Timber structures. | |
| | 1720.1 2010 | Design methods. *Plus 2 Amdts, 2010 - 2011.* |
| | 1720.2 2006 | Timber properties. *Plus 1 Amdt, 2006.* |
| | 1720.4 2006 | Fire-resistance for structural adequacy of timber members. |
| AS/NZS 1859 | Reconstituted wood-based panels - Specifications | |
| | 1859.1 2004 | Particleboard. *Plus 2 Amdts, 2006 - 2011.* |
| | 1859.2 2004 | Dry processed fibreboard. *Plus 2 Amdts, 2006.* |
| | 1859.3 2005 | Decorative overlaid wood panels. *Plus 1 Amdt, 2009*. |
| | *There is 1 other part, 2004.* | |
| AS 1860.2 2006 | Particleboard flooring – Installation. *Plus 1 Amdt, 2010.* | |
| AS/NZS 2904 1995 | Damp-proof courses and flashings. *2 Amdts, 1998, 2013* | |
| AS 3959 2009 | Construction of buildings in bushfire-prone areas. *Plus 3 Amdts, 2009 - 2011*. | |
| AS 4055 2012 | Wind loads for housing. | |
| AS 4226 2008 | Guidelines for safe housing design. | |
| AS/NZS 4364 2010 | Timber – Bond performance of structural adhesives. | |
| AS 4786.2 2005 | Timber flooring - Sanding and finishing. | |
| HB 44 1993 | Guide to AS 1684 1992, The National Timber Framing Code. | |

Further advice and changes in specifications of timber are needed frequently. For latest information visit www.timber.net.au

For timber decks visit the Outdoor Timber section of Resources at www.timber.net.au.

**105 Submissions**

Submit the following prior to ordering materials:

Product literature on hardware items proposed.

Technical data on melamine laminates proposed for use.

Technical data and samples of substrate materials (particleboard etc.) Thickness of materials at typical locations and functions.

**106 Delivery, Handling and Storage**

Deliver, handle and store products so that damage, deterioration and loss will be prevented. Control delivery schedules to minimise long-term storage at site.

Store timber on site indoors, or above ground and cover with secure impervious material.

## PART II MATERIALS

**201 Timber and Related Items Table**

| Material Group | Size | Manufacture or Type (Strength Group) F |
|---|---|---|
| **Sub-floor** | | |
| Stumps | | |
| Stump braces | | |
| Bearers | | |
| Joists | | |
| Beams | | |
| Ant caps | | |
| Insulation | | |
| Damp-proofing | | |
| Other: | | |
| **Wall framing** | | |
| Timber | | |
| Plate | | |
| Studs | | |
| Nogging | | |
| Bracing | | |
| Lintels | | |
| Trimmers | | |
| Steel or aluminium (or refer to 05400 COLD FORMED METAL FRAMING) | | |
| Plates | | |
| Studs | | |
| Nogging | | |
| Bracing | | |
| Lintels | | |
| Other: | | |
| **Roof framing (or refer to 06175 TIMBER TRUSSES [NAIL PLATE])** | | |
| Rafters | | |
| Ridge board | | |
| Hip rafters | | |
| Ceiling joists | | |
| Collar ties | | |
| Underpurlins | | |
| Props | | |
| Hanging beams | | |
| Pre-fabricated beams | | |
| Glue laminated beams | | |
| Other: | | |
| **Roof accessories** | | |
| Roof trim | | |
| Box gutter framing | | |
| Fascias | | |
| Barge | | |
| Gutter boards | | |
| Sump framing | | |
| Sarking | | |
| Other: | | |
| **Pole construction** | | |
| Piers | | |
| Poles | | |
| Bracing | | |
| Steel or timber | | |
| **Waterproof Membrane** | | |
| Other: | | |
| **Flooring Materials (or refer to 09648 WOOD STRIP FLOORING)** | | |
| Boards | | |
| Plywood | | |
| Particleboard | | |
| Decking | | |
| Other: | | |

| Material Group | Size | Manufacture or Type (Strength Group) F |
|---|---|---|
| **Wall and cladding material External cladding of: (or refer to 06165 FIBRE CEMENT PRODUCTS)** | | |
| Weatherboard | | |
| Hardboard | | |
| Soffits of fibre cement | | |
| Soffits of other material | | |
| **Internal** | | |
| Lining boards | | |
| Particleboard | | |
| Laminated faced | | |
| Fibre cement (or refer to 06165 FIBRE CEMENT PRODUCTS) | | |
| Fibrous panels | | |
| Wood | | |
| Straw | | |
| Other: | | |
| **Framing** | | |
| Drop walls | | |
| Dwarf walls | | |
| Bulkheads | | |
| Soffits | | |
| Screens | | |
| Other: | | |
| **Fences and gates (Pressure treated) (or refer to 02825 FENCES AND GATES)** | | |
| Posts | | |
| Rails | | |
| Plinths | | |
| Boards | | |
| Hinges | | |
| Other: | | |
| **Steps, ramps and balustrades (pressure treated)** | | |
| Posts | | |
| Joists | | |
| Floor boards | | |
| **Other:** | | |

**202 Fastening Table**

| Item | Size | Location | Material | Finish (galvanised or cadmium) |
|---|---|---|---|---|
| Bolts | | | | |
| Metal connectors | | | | |
| Nails | | | | |
| Screws | | | | |
| Nailing strips | | | | |
| Hinges | | | | |
| Holding down | | | | |
| Bolts | | | | |
| Other: | | | | |

**203 Insulation Materials Schedule** **Located at end of the document –Schedule of Insulation. Thermal and Acoustic**.

## PART III EXECUTION

**301 Examination**

Visit site and inspect conditions, comparing conditions to drawings before delivery of materials to site. Start of work means total acceptance of conditions.

**302 Installation General**

Comply with: AS 1684 Residential timber-framed construction, and other relevant Standards.
Ensure installation of isolation material between timber and damp substrate, installed in accordance with AS/NZS 2904 1995.

**303 Installation Particulars**

Ensure tasks and activities comply with the Act, Regulation, Code of Practice or Australian Standards, as relevant.
Perform operations including grooving, rebating, framing, housing, beading, mitring, scribing, nailing, screwing and gluing as necessary to carry out the works. Use timber in single lengths whenever possible. If joins are necessary, make them over supports unless otherwise shown or specified.
Arris visible edges in sawn work and in dressed work arris with sandpaper to 1.5mm radius unless otherwise shown or specified.
Back plough boards liable to warping (for example, if exposed on one face). Make the width, depth number and distribution of ploughs appropriate to the dimensions of the board and the degree of its exposure.
Provide necessary templates, linings, blocks, stops, ironwork and hardware, screws, bolts, plugs and fixings generally.
Install waterproof membrane to separate infrastructure from concrete or masonry.
Trim framing where necessary for openings, including those required by other trades.
Unless otherwise noted, construct framing so that floors are horizontal, i.e. no more than 3mm slope in 3000mm.
Construct wall framing vertical, so that no more than 3mm out of vertical in 3000mm of wall height.

**304 Completion**

Complete contracted work in accordance with contract documents and written variation orders issued by the project manager.

**END OF SECTION**

## PART I GENERAL

### 101 Scope

Supply and install fibre cement products and associated equipment and fixings including but not limited to:
Wall linings internal.
Ceiling linings internal.
Internal walls, fire-rated.
External cladding.
Wet area wall lining.
Eaves linings.
Fascias.
Partitions.
Wet area flooring.
Underlays.
External decks.
Lattice.
Bracing panels.
Ceramic faced panels.
Fibre cement pipe columns.

### 102 Related Work

Co-ordinate and co-operate with the following trades:

| | |
|---|---|
| Wall framing | Ceiling framing |
| Floor framing | External decks |
| Columns | |

### 103 Quality Assurance

A tradesman with wide experience and knowledgeable in this class of work is to undertake the work to be performed.

### 104 References

Comply with applicable portions of the following Australian Standards:

| | | |
|---|---|---|
| AS 2329 1999 | Mastic adhesives for fixing wallboards. | |
| AS/NZS 2908 | Cellulose-cement products. | |
| | 2908.1 2000 | Corrugated sheets. |
| | 2908.2 2000 | Flat sheet. |
| AS 3740 2010 | Waterproofing of domestic wet areas. *1 Amdt, 2012* | |

Relevant Technical Bulletins and published instructions produced by manufacturers.
Telephone Customer Services of state office for technical assistance.
Comply with requirements of relevant statutory authorities.

### 105 Delivery, Handling and Storage

Deliver materials in bundles or packages with care. Stack on edge or lie flat under cover and keep dry until installed. Protect edges and covers from chipping.

### 106 Warranty

Provide warranty covering the work against defective materials and workmanship for a period years from the date of Practical Completion. Include a statement that the whole of the work has been carried out in accordance with relevant Australian Standards and codes and manufacturer's instructions in effect at the time of installation.

## PART II MATERIALS

### 201 Acceptable Manufacturers

James Hardie Australia.
Rondo Building Services Pty Ltd.
CSR Building materials.

### 202 Materials

| **James Hardie Products** | | **CSR Cemintel Building Materials** | |
|---|---|---|---|
| Hardiflex | Thickness: 4.5, 6.0 | Cladding sheet | Thickness: 4.5/6.0 |
| Villaboard | Thickness: 6.0, 9.0, 12.0 | Wallboard FC | Thickness: 6.0, 9.0 |
| Versilux | Thickness: 6.0 | Wall board FC sq. edge | Thickness: 6.0 |
| Hardieplank Smooth | 230, 300 wide | Cladding plank | 230, 300 wide |

| James Hardie Products | | CSR Cemintel Building Materials | |
|---|---|---|---|
| Hardieplank W/grain | 230, 300 wide | Cladding plank woodgrain | 230, 300 wide |
| Rusticated weatherboard | 205 wide | X | |
| Old style weatherboard | 205 wide | X | |
| Hardiepanel Stucco | | X | |
| Hardieglaze Swirl | | X | |
| Hardies eaves | 4.5mm | Eaves lining | 4.5mm |
| Compressed sheet | 6.0,9.0,12.0,15.0,18.0, 24.0 | Compressed sheet decking | |
| Pineridge (impact resistant) | 6.0 | X | |
| Underlay for ceramic tile | | CT Underlay | |
| Underlay for vinyl and cork | | X | |
| Hardilattice, square, diamond, Tudor | Lattice, square, diamond Tudor | | |
| Hardietex (external sheet) | 7.5 | Texture base sheet | 7.5 |
| Hardiebrace - QLD only | 5.0 | X | |
| Partitions toilet and shower | | X | |

Supply all accessories required for each application.

**203 Equipment**

Supply equipment required for the erection and installation of the specified materials as recommended by the manufacturer.

## PART III EXECUTION

**301 Examination**

Visit site and inspect conditions, comparing conditions to the drawings before delivery of materials to site.
Rectify any discrepancy or unsuitability of substrate.
Start of work means total acceptance of conditions.

**302 Preparation**

Co-ordinate with and ensure preparatory work by other trades is done, prior to commencement of work and arrange for fixing grounds required for satisfactory execution of the work of this trade, including penetrations through cement sheet for services.

**303 Installation**

Ensure tasks and activities comply with the Act, Regulation, Code of Practice or Australian Standards, as relevant.
Comply with the manufacturer's installation instructions. Anchor and fasten materials and components to comply with ratings and performance requirements, and to comply with governing local regulations. Comply with appropriate Australian Standard.
Take care of and protect surrounding work, including other finishes, equipment and components, during installation. Provide protective covering where necessary.

**304 Installation Particulars**

Comply in all respects with manufacturers' recommendations contained in technical bulletins. Call for technical advice where necessary. Refer clause 104.

**305 Finishing Details**

Finish joints and secure fasteners. Remove surface defects to achieve uniform appearance of each type of installation.

**306 Protection**

Protect finished work. Make good damage in every respect at no additional cost to the proprietor.

**307 Cleaning**

Clean exposed surfaces including trim, edge moldings, and comply with manufacturer's instructions for cleaning and touch-up of minor finish damage.
Remove spatterings, droppings and surplus material.

**308 Completion**

Complete contracted work in accordance with contract documents and written variation orders issued by the project manager.

**END OF SECTION**

## PART I GENERAL

### 101 Scope

The work of this trade section covers the supply and installation of site-built joinery items. It includes, but is not limited to:
Site-built cupboards.
Service cupboard.
Wardrobes.
Coat cupboards.
Benches.
Shelves.
Racks.
Stairs, handrails.
Trim, architraves, skirtings, pelmets etc.
Hardware.
Other:

### 102 Related Work

Co-ordinate and co-operate with the following trades:

| | |
|---|---|
| Floor construction | Wall construction |
| Ceiling construction | Window trades |
| Doors and door frames | Plaster trades |
| Electrical installations | Manufactured casework |

### 103 Quality Assurance

Prototype: at a location selected by the project manager construct a complete prototype installation of:

Include in each prototype elements required by this specification, finished in every respect. When approved by the project manager, each prototype remains part of the work and becomes the standard for the remaining work.

### 104 References

Comply with applicable portions of the Australian Standards listed in SECTION 06100 CARPENTRY, plus those following, current edition:

| | | |
|---|---|---|
| AS/NZS 1859 | Reconstituted wood-based panels - Specifications | |
| | 1859.1 2004 | Particleboard. *Plus 2 Amdts, 2006 - 2011.* |
| | 1859.2 2004 | Dry processed fibreboard. *Plus 2 Amdts, 2006.* |
| | 1859.3 2005 | Decorative overlaid wood panels. *Plus 1 Amdt 2009*. |
| | *There is 1 other part, 2004.* | |
| AS 2754.2 1991 | Adhesives for timber and timber products - Polymer emulsion adhesives. | |
| AS 2796 | Timber - Hardwood- Sawn and milled products. *There are 3 parts, 1999-2006.* | |
| AS 4785 2002 | Timber - Softwood- Sawn and milled products. | |
| | 4785.1 2002 | Product specification. |
| | 4785.2 2002 | Grade description. |
| | 4785.3 2002 | Timber for furniture components. |
| AS 4786.2 2005 | Timber flooring - Sanding and finishing. | |

### 105 Submissions

Submit the following prior to fabrication:
Product literature on proposed hardware items.
Technical data on melamine laminates proposed for use.
Technical data and samples of substrate materials (particleboard etc.).
Thickness of materials at typical locations.

### 106 Delivery, Handling and Storage

Do not deliver until completion of anything which could soil, damage or deteriorate joinery. Prevent soiling, damage or deterioration during delivery, storage and handling.
Keep site storage to a minimum. If circumstances make storage necessary in areas other than the final location, store only in those that meet the requirements specified for installation areas.

## PART II MATERIALS

### 201 Material Suppliers

### 202 Materials

Particleboard: medium density: thickness

Timber:
Radiata pine:
Celery top pine:
Tasmanian oak:
Victorian ash:
Jarrah:
Silky oak:

Panels:
Hardboard: natural or pre coated
Plywood: natural or pre coated
Decorative: melamine etc.
Wood and metal laminates:
Fibreglass panels:
Glazed panels:
Glass fibre fabrications:
Cast plastic fabrications:
Solid polymer fabrications:

Fasteners:
Nails: type, size
Screws: type, size, metal

Adhesives:

**203 Site-built items**

A. Service cupboards, electrical hydrant, telephone etc.

| | |
|---|---|
| Frames of doors: | timber: |
| | metal |
| Doors: | match other internal doors |
| | details: |
| Bulkheads: | same as doors |
| | typical internal wall construction |
| | other: |

B. Toilet Partitions
Material:
Panels:
Finish:
Doors:
Upstands:
Indicators:
Coat hooks:

C. Stair Construction:
Material:
Custom built
Particleboard, craftwood
Prefabricated
Stringers
Treads
Blocking, etc.
Hand Rails:
Balustrades:
Posts:

D. Benches
Material:
Frame:
Supports:
Boards:
Panels:
Brackets:
Fixings:

E. Shelves:
Frame:
Supports:
Boards:
Panels:
Brackets:
Fixings:

F. Trim:
Architraves: Material:

Size:
Type No:
Finish:
Skirting: Material:
Size:
Type No:
Finish:
Pelmets: Material:
Size:
Brackets:

G. Finish: use only low VOC finishes on all timber surfaces with preference for finishes that can be recoated without removal of impervious hard coatings.

## PART III EXECUTION

### 301 Examination

Visit the site and inspect conditions. Check dimensions and compare aspects with the drawings and specification. Resolve differences before ordering materials or starting work.
Start of work means total acceptance of conditions.

### 302 Preparation for Joinery Installation

Prior to installing, condition joinery to the average humidity conditions prevailing in the installation areas.
Deliver anchoring devices and similar inserts required to be built into substrates well in advance of the fixing of fittings and provide full details when they are to be fixed by others.
Prior to installation, examine shop-fabricated work for completeness and remedy deficiencies. Include back priming and the removal of packing.
Thoroughly clean floors and walls that will be permanently concealed by joinery.

### 303 Installation of Joinery

Ensure tasks and activities comply with the Act, Regulation, Code of Practice or Australian Standards, as relevant.
Use concealed shims as required to install the work plumb, level, straight and distortion free within the following tolerances:

- 1mm in 800mm for plumb and level (including bench tops),
- 0.5mm maximum offsets in flush adjoining surfaces,
- 2mm maximum offsets in revealed adjoining surfaces.

Scribe and cut to fit adjoining work; refinish cut surfaces or repair damaged finishes at cuts.
Secure joinery with anchors or blocking built-in or directly attached to substrates. Secure to grounds, stripping and blocking with countersunk, concealed fasteners and blind nailing as required to complete the installation.
Except where pre-finished matching fastener heads are required, use fine finishing nails, countersunk and filled flush. Use a matching filler where a transparent finish is required.
Install casework without distortion so that doors will fit openings properly and be accurately aligned.

### 304 Hardware

Install joinery hardware as scheduled, listed and required in full compliance with the manufacturer's recommendations.
Adjust as needed to centre doors in openings.

### 305 Adjustments, Cleaning, Finishing and Protection

A. Finish the work specified in this trade section and remedy anything not finished at the shop or other stage prior to completion.
B. Adjust joinery to achieve a uniform appearance.
C. Lubricate and clean hardware, making final adjustments needed for proper operation.
Remove handling marks from visible joinery surfaces.
D. Protection: do everything needed to ensure that work is without damage or deterioration at Practical Completion.

### 306 Completion

Complete contracted work in accordance with contract documents and written variation orders issued by the project manager.

**END OF SECTION**

## PART I GENERAL

### 101 Scope

This trade section identifies requirements for the supply and installation of 4 different types and areas of waterproofing. It covers preparatory and protective work and associated materials including but not limited to:

A. System Type A, Wet Area membrane as in bathrooms, showers, laundries, garbage rooms and similar areas.
B. System Type B, External membrane applied to outside of walls, roof decks, balconies and similar locations.
C. System Type C, Tanking membrane applied to retaining walls, planter boxes, lift pits and other walls to be backfilled.
D. System Type D, Waterproofing added to concrete mix before placement.
Refer to Concrete trade sections.

### 102 Related Work

Co-ordinate and co-operate with the following trades:

| | |
|---|---|
| Concrete | Masonry |
| Surface finishes | Roofing |
| Excavation and fill | Windows |
| Concrete screeds (granolithic) | |

### 103 Quality Assurance

Use experienced and trained installers licensed by the material manufacturer. Provide evidence of the licence to the project manager.

### 104 References

Comply with applicable portions of the following Australian Standards:

| | | |
|---|---|---|
| AS 1884 2012 | Floor coverings – Resilient sheet and tiles – Laying and maintenance practices. | |
| AS 3600 2009 | Concrete structures*. Plus 2 Amdts, 2010, 2013.* | |
| AS 3740 2010 | Waterproofing of domestic wet areas. *1 Amdt, 2012* | |
| AS 3799 1998 | Liquid membrane-forming curing compounds for concrete. | |
| AS 4654 | Waterproofing and membranes for external above-ground use | |
| | 4654.1 2012 | Materials |
| | 4654.2 2012 | Design and installation |
| AS/NZS 4858 2004 | Wet area membranes. | |

### 105 Manufactured Products

Identification of a particular manufacturer's product does not exclude alternative products by others. It is a quality standard required to be met.
Submit request for alternatives to be approved to the project manager with full description including recommended installation procedures and procedures relating to Occupational Health and Safety of applicators and other site personnel.
Do not order materials until written approval of alternatives has been received.
Submit manufacturer's approval of installers where manufacturer's own licensed installers are not employed and a warranty is required.

### 106 Delivery, Handling and Storage

Keep on-site storage of materials to a minimum, delivering them as required for direct installation. Be responsible for loss and damage to delivered materials, both stockpiled and in place.
Deliver materials in sealed containers showing manufacturer's name. Arrange for inspection of materials by the project manager before using them.

### 107 Warranty

Requirement
Prior to completion of the waterproofing systems installation, provide each warranty, in the appropriate form; executed by the sub-contractor and the warrantor (or warrantors in the case of joint warranties); and for the required warranty period.
Warranty Conditions
Sub-contractor's obligations: the provision of a warranty does not relieve the sub-contractor of any of his contractual obligations.
Guarantee of performance: where the warrantor is a subsidiary of another organisation, provide that organisation's guarantee of performance of the warranty.
Adjustment of warranty period: where any part of the work is required to be repaired or made good under a warranty, the warranty period does not terminate until that part has been satisfactorily repaired or made good; and in respect of that part, recommences from the date of completion of the repair or making good.
Product warranties
Provide separate product warranties for each of the waterproofing systems.
System warranty

Provide separate warranties for each of the waterproofing systems, signed jointly by the manufacturer and the installer, stating that the products applied comply with this specification, are suitable for the conditions to which they will be subjected and were correctly installed in accordance with the manufacturer's published recommendations and details, the contract documents and provide a complete waterproof membrane.
Warrant each of the waterproofing systems against any defects that affect their performance or appearance
Defects include failure of any element of the waterproofing system, whether or not the failure causes the system not to achieve the design criteria or specified performance.
The warranty must cover the repair and/or replacement of all other building elements, finishes etc. to which damage occurs as a consequence of a defect in, or repair work carried out, to the waterproofing system.
Warranty Period
As noted beside each of the waterproofing systems described in this specification.

## PART II SYSTEM DESCRIPTION

### 201 Waterproofing System Type A

SYSTEM TYPE A – Wet Area Membrane
Location
Refer Waterproofing Table and drawings.
Typically to floors and walls of wet areas: including bathrooms, ensuites, laundries and garbage rooms, and to wall areas immediately adjacent to and behind a bath, sink or similar fixture.
Carry the membrane under fixtures, baths, shower bases, toilets, vanities and the like, and extend into the full area of shower recess:
to a minimum height of 2100mm to walls of shower recess extending 300mm beyond the horizontal extent of the designated tiled wall area;
to a height and width not less than 450mm to wall areas immediately adjacent to and behind a bath, sink or similar fixture.
System
Type: liquid applied, moisture curing, polyurethane liquid membrane.
Proprietary item: Vulkem non-exposed membrane system by Tremco Pty Ltd.
Substrate
Curing: allow concrete to cure for a minimum of 28 days prior to the application of the membrane.
Cleaning: clean down the substrate surface to remove all curing agents, wax, grease, oil, dirt, dust and other foreign material and leave it clean, dry, dust free, smooth and free of undulations.
Voids: patch with a non-shrinking quick setting grout and allow to cure for a minimum of 7 days prior to applying the membrane.
Application
Fillet: wherever a vertical penetration or upstand occurs, install a 12mm x 12mm fillet of Tremflex PU1 at the intersection of the vertical and horizontal surfaces.
Primer: prime porous substrate (concrete/cement) typically with Vulkem 171.
Prime non-porous materials (metals/plastics) typically with Tremco Primer No 181.
Joints and penetrations: on the same day as priming, seal joints and penetrations with Vulkem 931 sealant.
First coat: on the same day as priming, apply a coat of Tremco Vulkem non-exposed membrane to a minimum wet film thickness of 1.0mm to floors and walls in a single operation. If delayed beyond that day re-prime in accordance with manufacturer's instructions.
Detailing
Detail the membrane in accordance with the manufacturer's recommendations, as shown on the drawings and as follows:
Turn the membrane down into the puddle flange of outlets.
Turn the membrane up at, and seal to, all penetrations, pipes, waste outlets, etc.
Turn the membrane up for 100mm at all walls, plinths, and other upstands.
Dress the membrane over the horizontal leg of angle tile trims at doorways and turn up the vertical face of the angle to terminate level with the bottom of the floor tiles.
Similarly, dress the membrane up the face of door jambs to terminate at the underside of the floor tiles.
The membrane turn up is to create a complete waterproof envelope to the floor area of the space being treated.
Detail the membrane at movement joints in the substrate as detailed on the drawings.
Membrane curing: allow 72 hours for the membrane to cure prior to carrying out water tests or applying finishes, toppings etc.
Warranty
Provide a warranty for materials and application of the membrane for a period of years from the date of Practical Completion, to be in a form approved by the principal.
Alternatives
Type: any proposed alternative to the system specified below is to be a proprietary liquid applied or sheet membrane system which:
has a current Australian Building Product and Systems Certification Scheme certificate (Australian Building Codes Board); or
has a current technical opinion issued by the Australian Building Systems Appraisal Council (CSIRO) stating that the system is suitable for use as a waterproofing system for use in wet areas, shower recess bases and associated floors and wall/floor junctions which are to be tiled.

**201B Waterproofing System Type B**

SYSTEM TYPE B – External Membrane
Location
Refer Waterproofing Table and drawings:
System
Liquid applied, moisture curing, polyurethane rubber membrane.
Proprietary item: Vulkem 350/351 in a two coat application system by Tremco Pty Ltd.
Substrate
Curing: allow concrete to cure for a minimum of 28 days prior to the application of the membrane.
Cleaning: clean down the concrete surface to remove all curing agents, wax, grease, oil, dirt, dust and other foreign material and leave it clean, dry, dust free, smooth and free of undulations.
Voids: patch with a non-shrinking quick setting grout and allow to cure for a minimum of 7 days prior to applying the membrane.
Application
Fillet: wherever a vertical penetration or upstand occurs install a 12mm x 12mm fillet of Tremproof 60R at the intersection of the vertical and horizontal surfaces.
Primer: prime porous substrate (concrete/cement) typically with Tremco Primer No. 171.
Prime metals typically with Tremco Primer No 181.
Joints and penetrations: on the same day of priming, seal joints and penetrations with Vulkem 931 sealant to backing rods.
First coat: on the same day as priming, apply a coat of Tremco Vulkem 350 to a minimum wet film thickness of 1.5mm. If delayed beyond that day, re-prime in accordance with manufacturer's instructions.
Second coat: on the day after the first coat, apply a second coat of Tremco Vulkem 350 to a minimum wet film thickness of 1.5mm. If delayed beyond that day, reactivate the first coat with Vulkem 191 primer, in accordance with manufacturer's instructions.
Detailing
Detail the membrane in accordance with the manufacturer's recommendations, as shown on the drawings and as follows:
Turn the membrane down into the puddle flange of outlets.
Turn the membrane up at, and dress to, all penetrations, pipes, waste outlets, etc.
Turn the membrane up for a minimum of 150mm or level with the top of paving or tiles, at all walls, plinths, and other upstands. Refer to the drawings for extent as well.
Where the membrane turns up against hobs etc., and where indicated on the drawings, provide a cover flashing. Capture the horizontal leg of the flashing in the bed joint of blockwork or by sealing into saw cuts or reglets in blockwork or concrete. Dress the vertical leg down over the membrane to achieve a minimum 75mm cover. Use Colorbond finished zincalume for cover flashings generally and marine grade stainless steel where the flashing is built into concrete or cement beds, toppings or pavements.
Where indicated on the drawings, provide a K pressure seal to terminate the top of the membrane.
Provide cover flashings over the turn up of membranes at all services penetrations. Form the flashing from material that is compatible with the material of the individual service and the membrane. Seal the flashing to the service and dress down over the membrane to achieve a minimum 150mm overlap.
Detail the membrane at movement joints in the substrate as detailed on the drawings.
Outlets: proprietary funnel shaped sump cast into the roof slab, set flush with membrane, with a flat removable grating and provision (e.g. clamp ring) for sealing the membrane into the base of the outlet. To AS CA55.
Membrane curing: allow 72 hours for the membrane to cure prior to carrying out water tests or applying finishes, toppings etc.
Insulation and Protection
Extent: to the full extent of System Type C.
Insulation: following completion and successful testing of the membrane, install insulation boards loose laid over the membrane, tightly butted together and with end joints staggered.
Refer Roofing section.
Filter fabric, ballast and gravel retainers: refer Roofing trade section.
Topping screed and tiling: refer Tiling trade section.
Warranty
Provide a warranty for materials and application of the membrane for a period of years from the date of Practical Completion, to be in a form approved by the principal.
Alternatives
Any proposed alternative to this high performance polyurethane rubber membrane system will only be considered if it is equal to this system in every performance criteria, details of which are to be submitted with the proposal.

**201C Waterproofing System Type C**

SYSTEM TYPE C – Tanking Membrane
Location
Refer clause 101 and Waterproofing Table and drawings.
Typically to lift pits, retaining walls and other walls with backfill: to the full area of slab and wall.
System
Torch applied, AAP modified bituminous sheet membrane.
Proprietary item: Tremproof 3000 by Tremco Pty Ltd.
Substrate
Preparation: allow concrete to cure for a minimum of 28 days prior to the application of the membrane.

Clean down the concrete surface to remove all curing agents, wax, grease, oil, dirt, dust and other foreign material and leave it clean, dry, dust free, smooth and free of undulations.
Voids: patch with a non-shrinking quick setting grout and allow to cure for a minimum of 7 days prior to applying the membrane.
Application
Penetrations: wherever a vertical penetration or upstand occurs, install a 50mm x 50mm sand cement fillet at the intersection of the vertical and horizontal surfaces.
Priming: prime the entire surface that is to receive the membrane, including upstands etc., with Tremco Bituminous Primer (based on R105/15 bitumen) at the rate of 6-8 $m^2$ per litre.
Membrane: torch apply 1 layer of Tremproof 3000 and fully heat welded to the primed surfaces.
Lap the membrane 150mm at side and end joints and fully weld joints with a heated spatula.
Cover the entire membrane with a layer of Tremco Protection Board prior to the backfill being placed.
Detailing
Detail the membrane in accordance with the manufacturer's recommendations, as shown on the drawings and as follows:
Turn the membrane down into the puddle flange of outlets.
Turn the membrane up at and dress to all penetrations, pipes, waste outlets, etc.
Turn the membrane up for a minimum of 150mm or level with the top of paving or tiles, at all walls, plinths, and other upstands. Refer to the drawings for extent as well.
Where the membrane turns up against hobs etc. and where indicated on the drawings, provide a cover flashing. Capture the horizontal leg of the flashing in the bed joint of blockwork or by sealing into saw cuts or reglets in blockwork or concrete. Dress the vertical leg down over the membrane to achieve a minimum 75mm cover. Use Colorbond finish zincalume for cover flashings generally and marine grade stainless steel where the flashing is built into concrete or cement beds, toppings or pavements.
Where indicated on the drawings, provide a K pressure seal to terminate the top of the membrane.
Provide cover flashings over the turn up of membranes at all services penetrations. Form the flashing from material that is compatible with the material of the individual service and the membrane. Seal the flashing to the service and dress down over the membrane to achieve a minimum 150mm overlap.
Detail the membrane at movement joints in the substrate as detailed on the drawings.
Warranty
Provide a warranty for materials and application of the membrane for a period of years from the date of Practical Completion, to be in a form acceptable to the principal.
Alternatives
Any proposed alternative to this membrane system will only be considered if it is equal to this system in every performance criteria, details of which are to be submitted with the proposal.

**201D Waterproofing System Type D**

SYSTEM TYPE D – Xypex Additive
General
Location: to all concrete up to the floor level of the ground floor.
Proprietary item: the concrete waterproofing material is to be manufactured by Concrete Waterproofing Manufacturing Pty Ltd trading as XYPEX Australia, and is to be of the cementitious crystalline type known as XYPEX Waterproofing by Crystallization.
Note: XYPEX crystalline products should not be considered to be flexible.
Storage: store manufacturer's sealed and labelled material containers off the ground in a dry enclosed area at a minimum temperature of $7^0$C. The shelf life is 1 year when stored under proper conditions.
Manufacturer's warranty: on-site supervision, quality procedures, testing and all other requirements for issuance of manufacturer's warranty are to be complied with. Refer document PROCEDURE FOR SUPERVISION OF XYPEX POURS by XYPEX.
Dosage
By weight: Percentage dosage rates of XYPEX Admix C-1000NF/C-2000NF to the cementitious (ordinary Portland Cement [O.P.C.] and reactive pozzolana {e.g.; reactive fly ash}) content of the concrete.

Dosage rate must be between 0.8% and 1.0% by weight of cementitious (BWC) unless otherwise specified.

Example; 230 kg O.P.C. and 75 kg Fly Ash, total cementitious = 305 kg.
Dose rate @ 0.8% = 2.44 kg and @ 1.0% = 3.05 kg.

Refer to XYPEX Dosage Chart for applicable number of bags to be dosed in regard to cementitious content. Instances where this chart does not apply require that XYPEX Australia be contacted for determination and advice.
Cement content:: the cement (o.p.c.) content of the mix is not to be less than 10% by weight.

Special applications: chemical storage and constant high water pressure applications should be referred to Xypex Australia for suitable dose rates.
Batching and Mixing
Batching plant procedures, facilities and manpower will dictate the preferred/required batching technique. For example it is anticipated that the method described for central mix plants is not generally feasible in Australian conditions.

Ready Mix Plant – Dry Batch Operation:

Prior to batching, add XYPEX Admix in powder form to the drum of the ready-mix truck. After batching, mix the materials for 2-3 minutes to ensure the Admix is distributed evenly throughout the batch. (The batch must be agitated at high speed to ensure thorough dispersion.) A minimum of 10 minutes must elapse before discharge of the concrete. A further 1 minute of mixing at high speed immediately prior to discharge is recommended.

Ready Mix Plant – Central Mix Operation:
Mix XYPEX: admix with water to form a thin slurry (e.g. 7.0 kg of powder mixed with 13.0 litres of water). Pour the required amount of material into the drum of the ready mixed truck. The aggregate, cement and water should be batched and mixed in the plant in accordance with standard practices (taking into account the quantity of water that has already been placed in the ready mix truck). Pour the concrete into the truck and mix for at least 5 minutes, to ensure even distribution of the XYPEX Admix throughout the concrete.

Pre-cast Batch Plant:
Add XYPEX Admix to the rock and sand, then mix thoroughly for 2 – 3 minutes before adding the cement and water. The total concrete mass should be blended using standard practices.

**NOTE**: It is important to obtain a homogeneous mixture of XYPEX Admix with the concrete. Therefore, do not add dry powder directly to wet concrete as this may cause clumping and thorough dispersion will not occur. It is however suitable to add wet concrete to dry powder ensuring that thorough mixing is achieved (as per Dry Batch Operation).

XYPEX soluble bags are most suited for use in the Dry Batch operation.

Maximum water cement ratio should not exceed **0.5.** Requirements for higher water cement ratios must be referred to XYPEX Australia.

The XYPEX Admix C-1000NF/ C-2000NF will act as a plasticiser and takes at least 10 minutes to become fully activated and will last approximately 30 minutes after placement of concrete.

Extension of set time may occur when using XYPEX Admix C-1000NF/C-2000NF. Amount of extension will depend on concrete mix design, temperatures and dosage rate of XYPEX. Care should be exercised when other admixtures are being used; when mixed with XYPEX extended set times can result. This category includes set retarders and may include water reducers, plasticisers etc.
Reinforcement
General: to be in accordance with the pertinent, current Australian Standards.

Concrete slabs: all reinforcement is to be "Rib deformed bar" or “welded wire fabric” (other than fitments) and designed in accordance with Australian Standard AS 3600.

Exposed concrete decks: joint free exposed concrete decks must contain reinforcement to minimise thermal movement, for which the content and placement of reinforcement steel required is to be sufficient to satisfy the requirements of AS 3600 clause 9.4.3.4. Refer AS 3600 section 4 para 4.3 (Exposure Classification) in its entirety.

Minimum steel: in the event that the requirements of AS 3600 be less than 1.0% (exposure classification A1 or A2) reinforcement steel requirement will in no case be less than 1.0% applied proportionately throughout the concrete and apportioned at not less than 0.5% on the top and 0.5% on the bottom face of the concrete. (i.e.; 0.25% either direction at both faces). 1.0% equates to a degree of crack control between moderate and strong as defined by AS 3600, clause 9.4.3.4.

Pre-stressing (Post Tensioning): is to conform to the above standards and or other current pertinent standard and requirements where applicable.
Compaction
Standard: must comply with AS 3600, clause 19.1.3.
General: the concrete is to be compacted until the following conditions are attained:
Entrapped air is expelled;
formwork is completely filled to the intended level;
all reinforcement, penetrations and the like are completely surrounded, and
the required properties of the concrete are achieved.
Finishing
Standard: must comply with AS 3600, clause 19.1.4.
General: finishing of the concrete is to include the process of "re-working" the surface of the concrete. This will involve either power trowelling of the surface and/or vigorous hand steel trowelling. Subsequent to this, finishing any desired finish can then be applied.

Alcohol: in hot weather (above 25°C) aliphatic alcohol **must** be used during placement and finishing to control the early loss of bleed water, and which may also assist in the control of shrinkage.
Curing
Standard: must comply with AS 3600, clause 19.1.5.
General: the concrete is to be cured in accordance with the above references, to enable the achievement of maximum potential XYPEX crystalline growth.

Curing should begin immediately following the final set. The use of aliphatic alcohol does not take the place of standard concrete curing practices.
In formed concrete, formwork provides good protection and curing for concrete, and should be left in place for a period of 7 days. Only exposed surfaces need to be kept moist.
Alternate Curing (AS 3799): curing compounds complying with the above and having retention levels of 90% or more are a satisfactory curing agent for XYPEX Admix C-1000NF/C-2000NF treated concrete.
Backfilling
Normal backfilling procedures, after curing of the concrete, may take place. If backfilling takes place within 7 days after the initial set, the backfilling material must be moist so as not to draw moisture from the concrete.
Applied Finishes
The crystalline formation of dendritic fibres will fill the pores and capillaries, thus reducing the suction characteristics of the concrete. Therefore, an additional bonding system may be required for the adhesion of applied finishes such as paint, epoxy, grout, cement parget coat, plaster, stucco or the like.
It is the responsibility of the installer of the applied finish to take whatever measures are necessary, including testing, to ensure acceptance by, or adhesion, to the concrete surface.

## PART III EXECUTION

### 301 Examination

A. Inspect conditions before delivery of materials and start of work on site to ensure that everything is satisfactory. Arrange with builder for needed rectification.
Start of work means total acceptance of conditions.

B. Waterproofing Table

| Waterproofing materials | Location and Extent | System Type A, B, C or D |
|---|---|---|
| | | |
| | | |

### 302 Substrates

Substrates for membranes
Apply membranes to dry, smooth, firm, continuous surfaces, clean and free from loose or foreign matter.
Provide coving or fillets on internal corners. Round or arris external corners and edges.
Dryness tests for substrates: to AS 1884 Appendix A.
Acceptance of substrate: certify that the building structure, including the building tolerance, provision of reference lines and marks, is satisfactory for receiving the application of the waterproofing system.
Approval of installer: if the installation of the waterproofing system is not by the manufacturer, and a manufacturer's warranty is conditional on approval of the installer, then obtain the manufacturer's approval of the installer.
Make a photographic record of prepared substrates.

### 303 Protect Adjacent Surfaces

Protect adjacent surfaces from splashes over sprays and the like during the application of the waterproof membranes.
Plug drainage holes prior to the application of waterproofing membranes to prevent the material from entering outlets beyond what is necessary to dress the material into the outlet to complete the membrane system.
Remove plugs on completion.
Protect waterproofing membranes upon completion of each area of the application and maintain that protection until such time as the installation is approved and covered up by other finishes.

### 304 Protection of Installed Membranes

Location
Protect planter boxes, retaining walls, footings and any other location where the membrane is in direct contact with backfill or other potential damaging materials.
Type
Provide protection board made from 6mm thick fibre cement or 3mm thick, hollow polypropylene, co-polymer sheet or proprietary protection board equal Tremco Pty Limited.
Installation
Protect waterproofing membranes upon completion of each area of the application and maintain that protection until such time as the installation is approved and covered up by other finishes.
Following completion of the waterproof membrane to planter boxes install protection board to the membrane on vertical faces.
Restrain the board by trapping the top edge under the bottom edge of the K shaped pressure flashing used to terminate the top of the membrane.
Retaining Walls and Footings
Refer to 02315 SITE PREPARATION - EXCAVATION for membrane protection to retaining walls and footings built against existing site fill or rock.

**305 Cleaning**

During the application, promptly remove foreign material from the work area without damaging the waterproofing system.

**306 Installation of Waterproofing Systems**

Ensure tasks and activities comply with the Act, Regulation, Code of Practice or Australian Standards, as relevant.
Refer to the systems specified in Part II System Description.
Follow the specified instructions.

**307 Quality Control – Inspections**

Notice
Give sufficient notice so that inspections can be made at the following stages:
All substrate surfaces prior to the application of the waterproofing system.
Upon delivery of the system component material on site in sealed containers, prior to opening.
At completion of the application of the waterproofing systems, and prior to covering up with other finishes.
During the carrying out of flood tests.
Minimum notice required: 3 days.

Manufacturers' Inspections
Arrange for and pay the cost of inspections by the waterproofing systems manufacturer at each of the above stages and at regular frequent intervals during the application of the waterproofing systems.
Maintain a logbook on the site and record the time and date of each inspection, work complete and underway, at the time of each inspection, and comments by the manufacturer's representative.
Have the manufacturer's representative sign the logbook at the completion of each inspection and record the observations made.

**308 Testing Reports**

Test installations prior to application of finishes to membranes.
To each membrane in wet areas, test 20% of area of membrane with a minimum of 10 tests.
Submit a report on the preparation of areas to be treated, working progress and on completion. In each report include a photographic record.

**309 Cleaning**

Thoroughly clean work on completion, including affected adjacent surfaces.

**310 Completion**

Complete contracted work in accordance with contract documents and written variation orders issued by the project manager.

**END OF SECTION**

## PART I GENERAL

### 101 Scope

Supply labour and materials, services and equipment necessary for the preparation, application and finishing of elastomeric and composition type waterproofing membranes exposed to weather as indicated on drawings, schedules and as specified herein, to surfaces of structures, as follows:
Traffic coatings, pedestrian
Traffic coatings, vehicular light vehicles
Lane marking

### 102 Related Work

Co-ordinate and co-operate with the following trades:

| | |
|---|---|
| Concrete pavement | Substrates of concrete, steel or other stable material |

### 103 Quality Assurance

Test samples:

A. Prepare test samples for coating types and typical locations, where determined by the project manager. Do not commence coating of the substrate type until the sample is approved by the project manager. Apply samples in conditions approximating as closely as possible the lighting conditions of the finished work.
B. Test samples include the suitable preparation of substrates.
C. After approval, test samples are to be the standard for quality control of the completion of work of same type.

### 104 References

Comply with applicable portions of the following Australian Standards:

| | | | |
|---|---|---|---|
| AS/NZS 1580 | Paint and related materials - Methods of test. *There are numerous parts, 1990-2006.* | | |
| AS 4049 | Paints and related materials - Pavement marking materials. | | |
| | | 4049.1 2005 | Solvent-borne paint - For use with surface applied glass beads. |
| | | 4049.2 2005 | Thermoplastic pavement marking materials - For use with surface applied glass beads. |
| | | 4049.3 2005 | Waterborne paint - For use with surface applied glass beads. *Plus 1 Amdt, 2006.* |
| | *There are 2 other parts, 2006 - 2007.* | | |

### 105 Submissions

Submit the following materials:

A. Product literature on proposed systems.
B. Colour samples for approved materials. Identify samples with manufacturer's colour code and colour name (if any).
C. Samples are not to be less than 100 x 100mm, and are to be of the same gloss level as the scheduled colour.

### 106 Delivery, Handling and Storage

A. Store materials in designated spaces in a manner which meets the requirements of applicable codes and fire regulations. When not in use, keep such spaces locked and inaccessible to those not employed under this trade section. Provide each space with a fire extinguisher of carbon dioxide or dry chemical type bearing a tag of recent inspection.
B. Bring materials to the building and store in manufacturer's original sealed containers, bearing the manufacturer's standard label, indicating type and colour. Deliver materials in sufficient quantities in advance of the time needed in order that work will not be delayed in any way.

### 107 Project Conditions

Temperature: comply with the requirements of coating manufacturers with regard to both ambient temperature and relative humidity.

### 108 Warranty

Provide a written warranty stating that preparation of surfaces, materials and material application installed under this contract will show no deterioration and remain in good condition for a period of years from date of Practical Completion.

## PART II MATERIALS

### 201 Manufacturers

**202 Materials**

General: where manufacturer makes more than one grade of any material specified, use the highest grade of each type, whether or not the material is mentioned by trade name in these specifications.
Materials used for the project may be one of the following:
Membrane supplied in roll form
Liquid membrane in cans
Other
Other products may be approved by project manager. Apply to project manager in writing for approval of alternatives.
Provide materials necessary for preparation of surfaces, and for application.

## PART III EXECUTION

**301 Examination**

Inspect surfaces and determine that they are in proper condition to receive the work to be performed under this trade section. Refer 302 A, below.
The starting of work under this trade section will be taken to mean acceptance of such surfaces and other conditions as being satisfactory and defects in work resulting from accepting poor surfaces or conditions are to be corrected at no cost to the proprietor.
Refer AS 4049.1 and AS 4049.2

**302 Preparation**

A. Clean all surfaces before application. Remove dust, dirt, plaster, grease and other extraneous matter affecting the finish work.
B. Remove blisters or other imperfections in previous coats caused by foreign substances or paint skins from painted surfaces before the subsequent coat is applied.
C. Thoroughly stir materials in containers before application, unless otherwise directed by the manufacturer of the paint used, to ensure uniformity of colour and mass. Strain out paint skins or other materials which would cause lumps or roughness. Thin only as recommended by the manufacturer.

**303 Application**

A. Ensure tasks and activities comply with the Act, Regulation, Code of Practice or Australian Standards, as relevant.
B. General: execute work of this trade section in strict compliance with material manufacturer's recommendations.
C. In the case of maintenance or reapplication, execute work of this trade section in strict compliance with manufacturer's recommendations.

**304 Protection**

Furnish and lay suitable drop cloths in areas where material is being applied to protect other surfaces from damage during the work.
Install protective barriers until materials are totally dry.

**305 Cleaning**

At completion of work in each area, remove paint spots, oil and stain from adjacent surfaces.

**306 Completion**

Complete contracted work in accordance with contract documents and written variation orders issued by the project manager.

**END OF SECTION**

## PART I GENERAL

**101 Scope**

The scope of work includes, but is not limited to, the supply and installation of thermal insulation.
It also includes the supply and installation of acoustic insulation.

**102 Related Work**

Co-ordinate and co-operate with the following trades:

| | |
|---|---|
| Carpentry | Wall and roof framing |
| Brickwork | Blockwork |
| Metal roofing | Roof tiles |
| Plasterboard | Suspended ceiling |

**103 Quality Assurance**

Installers are required to be widely experienced in relevant aspects of the work and with the requirements of Australian Standards appropriate to the work.

**104 References**

Comply with the applicable portions of these Australian Standards:

| | |
|---|---|
| AS 1366 | Rigid cellular plastic sheets for thermal insulation. *There are 4 parts, 1989-1992, and 2 Amdts, 1992 - 1993.* |
| AS/NZS 2107 2000 | Acoustics - Recommended design sound levels and reverberation times for building interiors. |
| AS 3671 1989 | Acoustics - Road traffic noise intrusion - Building siting and construction. |
| AS 3999 1992 | Thermal insulation of dwellings - Bulk insulation - Installation requirements. *1 Amdt, 2012* |
| AS/NZS 4200 | Pliable building membranes and underlays.<br>4200.1 1994 Materials. *Plus 1 Amdt, 1994.*<br>4200.2 1994 Installation requirements. |
| AS/NZS 4859.1 2002 | Materials for the thermal insulation of buildings - General criteria and technical provisions. *Plus 1 Amdt, 2006.* |

Comply with the requirements of the Building Code of Australia.

**105 Submission**

Provide to the project manager before ordering, samples, literature and technical data of each specified material.

**106 Delivery, Handling and Storage**

Deliver, handle and store products so that damage, deterioration and loss will be prevented. Control delivery schedules to minimise long-term storage at the site.
Store above ground with secure impervious material.

## PART II MATERIALS

**201 Approved Material Suppliers**

**202 Materials – Thermal**

A. Thermal insulation (building paper type) with and without reflective facings, with and without flame retardants, sarking.

B. Vapour barriers - with and without reflective facings - paper/foil, high density polyethylene breather membranes, aluminium foil reinforced or folded as batts.

Comply with manufacturer's recommendations and AS/NZS 4200.1 Materials

C. Bulk thermal insulation - in sealed batts or sealed blankets semi-rigid glasswool, rockwool or cellulosic fibre, sea-grass, polyester, with or without facing. In-situ urea-formaldehyde foam.
Comply with manufacturer's recommendations and the applicable Australian Standards.

D. Rigid cellular insulation - polystyrene polyurethane, polyisocyanurate urea-formaldehyde foam boards.
Comply with manufacturer's recommendations and the relevant Australian Standards.

**203 Materials–Acoustic**

A. Acoustic insulation (attenuation type) with or without facings - flexible polyurethane foam, polyester blankets, glass and mineral wool batts, plasterboard.

B. Acoustic insulation (absorption type) with or without facings, reinforcement - suspended mineral fibre ceilings, mineral tiles, perforated fibre cement sheet systems, and panels, metal pans and strips with or

without absorption batts, suspended baffles sound barriers, sprayed texture finishes of plaster, cement or vermiculite.

C. Acoustic sealants - polyethylene foam, closed cell resilient foams, polyurethane foams, non-shrinking sealants of silicone or similar type with good adhesion, door and window seals.

## PART III EXECUTION

**301 Examination**

Visit the site and inspect conditions, comparing conditions to drawings before delivery of materials to site. Start of work means total acceptance of conditions.

**302 Preparation**

Prepare surfaces and/or framing material and ensure that no obstructions will prevent rapid and effective installation.

**303 Installation General (Thermal)**

Ensure tasks and activities comply with the Act, Regulation, Code of Practice or Australian Standards, as relevant.
Comply with manufacturer's current written recommendations and the relevant Australian Standards.
Install membrane to metal roofing, tiled roofing, walls, underside of floor.
Install bulk thermal insulation to:
Walls
Roof
Ceiling space
Install rigid thermal insulation to areas shown on the drawings: roof, walls, etc.

**304 Installation General (Acoustic)**

Install acoustic attenuation type material in accordance with the manufacturer's current written recommendations. Comply with AS/NZS 2107.
Install acoustic absorption material in accordance with the manufacturer's current written recommendations.
Seal junctions and around penetrations where indicated by the acoustic systems designs.
Spray surface after providing protection and masking to surrounding surfaces, in accordance with manufacturer's instructions.

**305 Cleaning**

Remove surplus material on completion and arrange for inspection(s) by manufacturer's representative.

**306 Completion**

Complete contracted work in accordance with the contract document and written variation orders issued by the project manager.

**END OF SECTION**

## PART I GENERAL

### 101 Scope

Design, engineer, fabricate and install insulated panels with required components, fixings, fabrication techniques, coatings and finishes, including but not limited to:
Wall panels, metal clad bonded to each side of expanded polystyrene foam core.
Roof panels, metal clad bonded to each side of expanded polystyrene foam core.
Roof plumbing.

### 102 Related Work

Co-ordinate and co-operate with the following trades:
Structural steel frame Timber structural frame
Floor construction

### 103 Quality Assurance

A. The products specified herein are proprietary items manufactured and supplied by specialist fabricators. Manufacturer is required to submit written verification of quality of aspects of performance.
B. Provide certificates prepared by relevant testing authorities stating that the composite building panels comply with characteristics claimed by the manufacturer.
C. Pre-installation conference
Arrange with the contractor/builder for a conference to establish and settle matters regarding the site installation methods and time schedule.
D. Erection of panels at the site is required to be performed in accordance with the requirements of relevant statutory authorities.

### 104 References

Comply with applicable portions of the following Australian Standards:

| | | |
|---|---|---|
| AS/NZS 1170 | Structural design actions.<br>*There are 5 parts, several Supplements and Amdts, 2002 – 2011.* | |
| AS/NZS 2179 | Specifications for rainwater goods, accessories and fasteners. | |
| | 2179.1 1994 | Metal shape or sheet rainwater goods, and metal accessories and fasteners. |

Comply with the requirements of relevant authorities having jurisdiction on this project.
Product manual produced by manufacturer of components.

### 105 Submissions

Provide to the project manager before fabrication of components:
A. A complete written description of the material ordered, with a description of construction and installation techniques.
B. 2 samples of the finish to the panels as ordered.
C. Manufacturer's maintenance recommendation.

### 106 Delivery, Handling and Storage

Deliver the materials to the site in a totally satisfactory condition. Schedule deliveries so that panels are erected and secured direct from the delivery vehicle. Reduce storage of materials on site to a minimum.
Mark each component for easy identification. Provide security for materials not installed, from loss or damage by weather or other cause.
Do not install damaged component or panel. Remove and replace such item.

### 107 Project Site Condition

Do not install wet processes in wet weather, or when temperature is less than 4ºC or more than 35ºC.

### 108 Warranty

Provide to the project manager a written warranty stating that components of the complete installation will remain intact and in a satisfactory condition for year(s) from the date of Practical Completion.

## PART II MATERIALS

### 201 Acceptable Manufacturers

### 202 Design Criteria

The panels are required to meet the following criteria when erected in place.
A. Structural movement (of building).
B. Thermal movement (of building).
C. Wind load on panels.
D. Dead load on panels.
E. Fire resistance to requirement.

F. Anchor bolts to secure panels to buildings.
G. Terrain Category: refer AS/NZS 1170, Part II Wind Forces.

**203 Panel Components for Walls**

Trade name:
Core material: expanded polystyrene, Grade S, SL or :
Panel thickness: 50, 75, 100mm or:
Cladding metal: 0.40, 0.60mm or : inside thickness
with "galvabond" steel,
0.40, 0.60mm or : outside thickness
"galvabond" steel,
Metal finish: Outside, "Colorbond", :
"Marviplate", :
Inside, "Colorbond", :
"Marviplate", :
Panel width: 1200mm.
Jointing: standard slip joint tongue and groove.
Fixing: as supplied by manufacturer to suit installation requirements.
Panel arrangement:
Base detail: :
Horizontal panel intermediate fixing:
C type distribution cleat
Concealed aluminium extrusion
Vertical panel intermediate fixing:
Recessed aluminium extrusion
Concealed C type distribution cleat
Recessed pressed steel top hat
Corner details: Aluminium extrusion, square section
Pressed steel cover
Panel cut and folded
Curved corner
Internal wall panel connection (vertical stud):
Aluminium extrusion, channel and top hat sections
Parapet details:
Pressed steel, galvabond, finish to match wall panels
Door frames:
Aluminium extrusions
Timber
Window frames:
Aluminium extrusions
Neoprene gasket frames
Glass 6mm clear float :
External grille
Aluminium extrusions
Aluminium grille blades
Sealant:
Backer rod: polyethylene foam, continuous
Sealant: neutral curing silicone rubber

**204 Panel Components for Roofs**

Trade name:
Core material: expanded polystyrene, Grade S, SL or:
Panel thickness: 50, 75, 90mm or:
Cladding: 0.60mm or : inside thickness
"galvabond" steel,
0.40, 0.60mm or : outside thickness with ribs on upper surface flat on underside "galvanised" steel,
Metal finish: Outside, "Colorbond", :
Inside, "Colorbond"
Panel width: 990mm
Fixing to purlins: self-drilling screw with cyclone cap and neoprene washer for fixing to steel purlins.
Type 17 screws for fixing to timber purlins.
Fixing to sidelaps: point No. 8 x 12 hex head with neoprene washer.
Flashings and cappings: G250, "Colorbond" finished to match wall or roof panel, formed to comply with recommendation of AS 2179.
Gutters: as for flashings.
Rib end stops: as supplied by manufacturer.
Eave closure strips: as supplied by manufacturer.

**205 Fabrication**

A. Provide and fabricate frame and support structures in accordance with structural engineer's requirements.
B. Check site dimensions before fabrication of components. Tolerances are not to exceed +3mm, -3mm.
C. Schedule fabrication in accordance with contractor's construction program.
D. Mark each item for easy identification.

**206 Source Quality Control**

The engineer and project manager will make random inspections at various stages of progress of panel fabrication before delivery.
Make available item needed for inspection and verification of compliance with this specification.

## PART III EXECUTION

**301 Examination**

Examine conditions at the site before delivery of completed panels and installation. Arrange with contractor for correction of non-optimum conditions.
Ensure fixing bolts are in place, ready to receive the panels.
Start of work means total acceptance of conditions.

**302 Preparation**

Ensure tasks and activities comply with the Act, Regulation, Code of Practice or Australian Standards, as relevant.
Protect by appropriate means surface either of the building or of the panels which may be damaged during installation.

**303 Installation**

Install panels by agreed upon means, plum, true, without warping or twisting. Tighten bolts and secure final position.
Comply with supplier's/manufacturer's installation recommendations.

**304 Sealants**

At junction of panels with other materials, insert into opening a closed cell polyethylene backing rod, wedged firmly in place. Apply over the backing rod an approved silicone rubber, to colour selected by the project manager.
Use only material recommended by the panel fabricator.

**305 Field Quality Control**

A representative of panel manufacturer or system supplier is required to be present during installation of panel on the building, when required by the project manager.

**306 Repairs**

Repair surface either on the building or installed panels which may have been damaged during installation.
Make good the surface and restore to uniform appearance with adjacent surfaces.
Use paint repair material provided by the panel fabricator.

**307 Protection**

Protect the installed panels until completion of the project. Prevent damage to completed work by necessary means.

**308 Cleaning**

On completion, clean up debris, remove support structures, scaffolding and the like. Leave work and surfaces entirely clean and uniform condition.

**309 Completion**

Complete work in accordance with contract documents and written variation orders issued by the project manager.

**END OF SECTION**

## PART I GENERAL

### 101 Scope

Design, engineer and install prefabricated fire rated and acoustic rated steel faced wall panels with each shell filled with aerated concrete.
Supply the above materials including but not limited to:
Complete list of characteristics of the chosen panel type and install instructions:
Training and supervision of installers.
Other components for extended thermal insulation performance.
Panels erected vertically or horizontally.
Required fixings.
Furring channels.
Plasterboard.

### 102 Related Work

Co-ordinate and co-operate with the following trades:

| | |
|---|---|
| Floor construction | Wall construction trades |
| Concrete | Ceiling installation |
| Structural steel | Plasterboard |
| Electrical installation | Painting |

### 103 Quality Assurance

A. The panels specified herein are proprietary items manufactured and supplied by specialist fabricators. Manufacturer is required to submit written verification of quality of aspects of performance.
B. Provide certificates prepared by relevant testing authorities stating that the composite building panels comply with characteristics claimed by the manufacturer.
C. Pre-installation conference
Arrange with the contractor/builder for a conference to establish and settle matters regarding the site installation methods and time schedule.
D. Erection of panels at the site is required to be performed in accordance with the requirements of relevant statutory authorities.
E. Provide a statement that installers have been fully trained by the manufacturer.

### 104 References

Comply with the requirements of relevant authorities having jurisdiction on this project.
Provide manual produced by manufacturer of components.

### 105 Submissions

Provide to the project manager before fabrication of components:
A. A complete written description of the material ordered, with a description of construction and installation techniques.
B. Two samples of the finish to the panels as ordered.
C. Manufacturer's maintenance recommendation.

### 106 Delivery, Handling and Storage

Deliver the materials to the site in a totally satisfactory condition. Schedule deliveries so that panels are erected and secured direct from the delivery vehicle. Reduce storage of materials on site to a minimum.
Mark each component for easy identification. Provide security for materials not installed, from loss or damage by weather or other cause.
Do not install damaged component or panel. Remove and replace such item.
Co-operate with other trades. Avoid disturbance of other activities on site particularly relating to the use of moving and lifting equipment.

## PART II MATERIALS

### 201 Acceptable Manufacturers

### 202 Design Criteria

The panels are non-loadbearing.
The panels are required to meet the following criteria when installed.
A. Structural movement (of building).
B. Thermal movement (of building).
C. Wind load on panels.
D. Dead load on panels.
E. Fire resistance to requirement.
F. Anchor bolts to secure panels to buildings.

G. Terrain Category: refer AS/NZS 1170, Part II Wind Forces.
Consult manufacturer who will supply a complete list of components required for each application.
Ensure that finishes of components are related in the list.

**203 Panel Description**

| | |
|---|---|
| Trade name: | |
| Core material: | |
| Panel: | width: 250mm, thickness: 78mm |
| Shell material: | zincalume steel |
| thickness: | |
| finish on steel: | |
| Core filling: | aerated concrete |
| Jointing: | tongue and groove |
| Channels and angles: | custom made by panel manufacturer |
| Floor fixing: | cold formed steel: |
| Ceiling fixing: | cold formed steel: |
| Stud: | cold formed steel: |
| Top hat: | cold formed steel: |
| Sound insulation: | acoustic fibre: |
| Weight p.s.m: | |
| Sealant (FYREthane): | as supplied by manufacturer: |

**204 Fabrication**

A. Provide and fabricate frame and support structures in accordance with structural engineer's requirements.
B. Check site dimensions before fabrication of components. Tolerances are not to exceed +3mm, -3mm.
C. Schedule fabrication in accordance with contractor's construction program.
D. Mark each item for easy identification.

**205 Source Quality Control**

The engineer and project manager will make random inspections at various stages of progress of panel fabrication before delivery and during installation.
Make available items needed for inspection and verification of compliance with this specification.

## PART III EXECUTION

**301 Examination**

Examine conditions at the site before delivery of completed panels and installation. Arrange with contractor for correction of non-optimum conditions.
Ensure fixing bolts are in place, ready to receive the panels.
Start of work means total acceptance of conditions.

**302 Preparation**

Ensure tasks and activities comply with the Act, Regulation, Code of Practice or Australian Standards, as relevant.
Protect by appropriate means surfaces either of the building or of the panels which may be damaged during installation.

**303 Installation**

Install panels by agreed upon means, plum, true, without warping or twisting. Tighten bolts and secure final position.
Comply with supplier's/manufacturer's installation recommendations.

**304 Sealants**

At junction of panels with other materials, insert into opening FYREthane sealant.
Use only material recommended by the panel fabricator, in accordance with manufacturer’s installation.

**305 Field Quality Control**

A representative of panel manufacturer or system supplier is required to be present during installation of panel on the building, when required by the project manager.

**306 Repairs**

Repair surface either on the building or installed panels which may have been damaged during installation.
Make good the surface and restore to uniform appearance with adjacent surfaces.
Use paint repair material provided by the panel fabricator.

**307 Protection**

Protect the installed panels until completion of the project. Prevent damage to completed work by necessary means.

**308 Cleaning**

On completion, clean up debris, remove support structures, scaffolding and the like. Leave work and surfaces entirely clean and uniform condition.

**309 Completion**

Complete work in accordance with contract documents and written variation orders issued by the project manager.

**END OF SECTION**

## PART I GENERAL

### 101 Scope

Supply and install membrane roofing including preparatory work and associated materials including but not limited to the following:
Membrane roofing.
Concrete patching and filling.
Surface finishing.
Roof plumbing.

### 102 Related Work

Co-ordinate and co-operate with the following trades:
Roof plumbing Concrete
Masonry

### 103 Quality Assurance

Perform work of this trade section with experienced tradesmen familiar with the quality of work required in this class of work, and approved in writing by the material supplier.
Pre-installation conference: meet at site with installer, material manufacturer, installers of relative work and project manager. Give 72 hours' notice to all. Keep record of decisions.

### 104 References

Comply with applicable portions of the following Australian Standards:

| | | |
|---|---|---|
| AS/NZS 2179 | Specifications for rainwater goods, accessories and fasteners. | |
| | 2179.1 1994 | Metal shape or sheet rainwater goods, and metal accessories and fasteners. |
| AS 4654 | Waterproofing and membranes for external above-ground use | |
| | 4654.1 2012 | Materials |
| | 4654.2 2012 | Design and installation. |

### 105 Submissions

Submit prior to ordering materials:
A. Samples and product data of specified products.
B. Calculation of sizes of plumbing outlets.
C. 300mm square samples of roof sheet material proposed for installation.
D. Copies of minutes of pre-installation conference.
E. Evidence of payment of any relevant fees.

### 106 Delivery, Handling and Storage

Reduce on-site storage of materials to a minimum. Deliver materials as and when required for direct installation. Be responsible for loss and damage to materials delivered whether stockpiled or in place.

### 107 Warranty

Provide to the proprietor a warranty, co-signed by the manufacturer and his authorised installer, covering the whole of the roof and roof plumbing system stating that such installations will remain weather-tight and waterproof for the period of years from the date of Practical Completion.
Included in the warranty roof penetrations for equipment supports, pipes, flues, upstands, flashings, etc. including those installed after the roofing membrane has been completed.
Note: this will necessitate co-operation with other trades and review of the results of the work of those tradesmen.

## PART II MATERIALS

### 201 Acceptable Manufacturers

### 202 Materials

| Name | Code | Thickness | System name/ No. of plys & layers | Surface finish | Accessories | Gutters, downpipes, fixings, etc. |
|---|---|---|---|---|---|---|
| | | | | | Roof light, access hatches, etc. | |
| | | | | | | |

**203 Equipment**

**204 Fabrication**

## PART III EXECUTION

**301 Examination**

Inspect site conditions before start of work on site, before delivery of materials. Ensure conditions are satisfactory for installation.
Arrange with builder for rectification required before delivery of materials.
Start of work means total acceptance of conditions.

**302 Preparation**

Ensure tasks and activities comply with the Act, Regulation, Code of Practice or Australian Standards, as relevant.
Prepare surfaces affected by the installation in accordance with material manufacturer's instructions.
Comply with manufacturer's instructions and Australian Standards.
Variations are subject to project manager’s written order. Execute sleeves, pockets, flashings, collars, etc. as instructed by the manufacturer.

**303 Installation**

Comply throughout with the requirements of Australian Standards and manufacturer of materials.

**304 Field Quality Control**

Arrange for attendance of manufacturer's representative every alternate day of installation. The project manager will inspect.
Comply with the project manager's request for testing he may order at the completion of part or all of the installation.

**305 Cleaning**

Thoroughly clean work on completion, including surfaces adjacent to the work of this trade section which has been affected. Clean out gutters, downpipes, drains, etc.

**306 Protection**

Protect the installation from damage by suitable means until Practical Completion.

**307 Completion**

Complete contracted work in accordance with contract documents and written variation orders issued by the project manager.

**END OF SECTION**

## PART I GENERAL

### 101 Scope

Supply and install a complete roofing and siding (external cladding) installation as shown on the drawings including but not limited to the following:

A. Metal deck of zincalume steel, aluminium, copper etc., including accessories, fastening clips, apron flashings, gutters, parapet linings, copings, sumps, overflow pipes, downpipes.
B. Roof insulation and wire mesh.
C. Roof penetrations and sealing thereof.
D. Metal cladding.

### 102 Related Work

Co-ordinate and co-operate with the following trades:

| | |
|---|---|
| Structural steel | Metal windows and glazing |
| Doors and door frames | Roller shutter doors |
| Carpentry | Drainage |

### 103 Quality Assurance

Tradesmen are required to be experienced in and knowledgeable about the work to be performed and the various Standards to which the work is to comply. The project manager will make random inspections during the execution of the work.

### 104 References

Comply with applicable portions of the following Australian Standards:

| | | |
|---|---|---|
| AS/NZS 1170 | Structural design actions. *There are 5 parts, several Supplements and Amdts, 2002 – 2011.* | |
| AS 1273 1991 | Unplasticised PVC (UPVC) downpipe and fittings for rainwater. | |
| AS/NZS 1562 | Design and installation of sheet roof and wall cladding. | |
| | 1562.1 1992 | Metal. *Plus 3 Amdts, 1993 - 2012.* |
| | 1562.3 2006 | Plastic. *There is 1 other part, 1999.* |
| AS/NZS 2179 | Specifications for rainwater goods, accessories and fasteners. | |
| | 2179.1 1994 | Metal shape or sheet rainwater goods, and metal accessories and fasteners. |
| AS 3566 2002 | Self-drilling screws for the building and construction industries. *There are 2 parts.* | |
| AS 3999 1992 | Thermal insulation of dwellings - Bulk insulation - Installation requirements. *1 Amdt, 2012* | |
| AS/NZS 4256 | Plastic roof and wall cladding materials. *There are 5 parts, 2006.* | |
| AS/NZS 4389 1996 | Safety mesh. | |
| HB 39 1997 | Installation code for metal roof and wall cladding. | |
| HB 114 1998 | Guidelines for the design of eaves and box gutters. | |

### 105 Submissions

Submit prior to ordering materials:

A. Samples and product data of specified products.
B. Calculation of sizes for gutters and downpipes.
C. To roofer - supply layout showing exact roof framing member positions.

### 106 Delivery, Handling and Storage

Deliver to site, unload and stack in a location away from potential damage, preferably directly on to installed roof framing. Inspect on arrival and reject bent or damaged material.

### 107 Warranty

Provide to the proprietor a warranty on the whole of the roof and roof plumbing including penetrations for pipes, flues, upstands etc. performed for mechanical equipment sub-contractor which states that work will remain waterproof and weather-tight for the period of years from the date of Practical Completion.

## PART II MATERIALS

### 201 Acceptable Manufacturers

### 202 Materials – Schedule for Metal Roofing

**Located at the end of the document**

### 203 Schedule for Metal Siding (Cladding) for Walls

**Located at the end of the document**

**204 Fabrication**

Form and fabricate components in accordance with AS/NZS 1562 and AS/NZS 2179.1, and other relevant Standards.
Self-drilling screws are to conform to Class 3 as described in AS 3566.

**205 Dissimilar Metals**

In moist environments, prevent totally contact between dissimilar metals (any metals).
This instruction takes priority over any drawing, detail or instruction and will prevent cathodic reaction between the metals.
Refer this instruction to the structural engineer.

## PART III EXECUTION

**301 Examination**

Inspect site conditions before installation. Ensure framing is entirely satisfactory.
Ensure that delivery and installation will not be impeded by on-site conditions at time of delivery.
Start of work means total acceptance of conditions.

**302 Terrain Category**

The site is zoned as Terrain Category:
Refer AS/NZS 1170.

**303 Preparation**

Prepare framing and surfaces for installation.

**304 Installation**

Install work in accordance with manufacturer's instructions and Australian Standards. Refer clause 104.

**305 Flashing**

Lap flashing at least 150mm at junctions, and over flashings neatly dressed and finished. Where necessary to follow a roof slope, step flashings in even overlapping widths. Finish top corners to a line parallel to the roof slope.
Fabricated flashings in materials which are compatible with, and same finish as, gutter and roofing materials.
Complete work and leave an entirely watertight installation.

**306 Penetrations**

Form penetration flashings neatly with material matching roofing material. Form flanged tubular collars 0.70mm sheet zinc not less than 150mm high and 12mm wider than penetrating item, or use EPDM collars.
Where the width of a penetration is wider than a roofing trough or extends across several troughs, form a back gutter, using sheet material similar to the roofing material, well lapped under the roofing, double riveted and sealed with silicone sealant. Close and seal ends of cut ribs. Form back gutters not less than 100mm wide with falls towards the sides of the penetration collars.
Form over-flashings of penetration collars neatly in material matching the roofing material but not less than 0.5mm thick, securely clipped and sealed to the penetrating items and dressed well down over the collars to finish at a straight line level with the tops of the ribs.
Do not use lead or copper for over-flashings.

**307 Downpipes**

Install in accordance with AS/NZS 2179.1 for metal.
Install in accordance with AS 1273 for PVC. Comply also with manufacturer's instructions.
Secure to building at recommended centres, minimum 1800mm with galvanised steel straps.
Install base of downpipes into up-turned shoe of stormwater drain and seal junction with cement mortar, or other approved material.

**308 Cleaning**

To prevent contamination and corrosion, keep clean metal roofing and rainwater goods at times during the progress of the works.
At the end of work each day, and immediately before each occurrence of rain, sweep the metal surfaces thoroughly to remove metal filing, swarf, off-cuts, dust, and other materials which could cause corrosion or blockages. Prevent waste materials from entering downpipes, rainwater heads, or drains.
Remove unsecured nails, rivets, screws, bolts and similar fixing devices, guttering, etc., at the end of work each day and at the completion of roofing installation.

**309 Testing**

On completion, test the entire installation in the presence of and to the satisfaction of the project manager.

**310 Completion**

Complete contracted work in accordance with contract documents and written variation orders issued by the project manager.

**END OF SECTION**

NOTE: THERE IS A REQUIREMENT UNDER OHS&E LEGISLATION TO DEMONSTRATE THE REASONS FOR SELECTING PERSONAL PROTECTIVE EQUIPMENT IN LIEU OF SAFER LESS RISKY METHODS OF SAFETY FOR THE INSTALLATION.

## PART I GENERAL

### 101 Scope

Supply and install fall arrest and/or roof fence equipment including but not limited to:
Anchor points, harness gear and equipment, static line, eaves platforms and fences and associated safety signs.

### 102 Related Work

Co-ordinate and co-operate with the following trades:

| | |
|---|---|
| Roof framing | Roofing materials |
| Eaves construction | Membrane roofing |

### 103 Quality Assurance

Work of this trade section is to be performed by experienced craftsmen familiar with the quality required in this class of work.
Where 5 or more items of a similar product are required, construct a prototype, full size. Finish the prototype in every respect. When approved by the project manager, this sample remains part of the work and becomes the standard for the remaining work.

### 104 References

Comply with applicable portions of the following Australian Standards:

| | |
|---|---|
| AS 1657 2013 | Fixed platforms, walkways, stairways and ladders – Design, construction and installation. |
| AS/NZS 1891.1 2007 | Industrial fall arrest systems and devices – Harnesses and ancillary equipment. *There are 3 other parts, 1997 - 2009, 1 Supplement 2001, 2 Amdts 2007 – 2008.* |
| AS/NZS 4801 2001 | Occupational health and safety management systems - Specification with guidance for use. |
| AS 6001 1999 | Working platforms for housing construction |

Comply with State requirements and codes of practice in relation to work on roofs.
Comply with the requirements of relevant statutory authorities having jurisdiction on this product.
Product manual produced by manufacturers of components.

### 105 Shop Drawings

Comply with DOCUMENT 00800 SUPPLEMENTARY CONDITIONS OF CONTRACT, clause 27.
Provide Shop Drawings for major items supplied hereunder.

A. Contract drawings and details provided are indicative as to general and minimum requirements, and do not show conditions.
B. Develop details not shown and in conformity with the indicative details shown.
C. Take and confirm dimensions on site, before preparing Shop Drawings where possible.
D. Submit detailed Shop Drawings for fabrication and installation of major metalwork. Show plans, elevations and detailed sections; indicate materials, finishes, fasteners, anchorages and accessory items.

### 106 Samples

A. Sample welds: if requested, provide samples of weld types, including samples of railings joined at right angles and at typical acute angles, welded and ground smooth, for approval. If not acceptable, provide additional samples until approved. When approved, samples will establish quality of similar work of this section.
B. Check on delivery: request project manager to check materials on delivery to site for quality, and he will reject materials not meeting the requirements of this specification or equal to approved samples. Return rejected materials to the fabricator at the fabricator's expense.
C. Finish: provide samples of specified finishes when requested.

### 107 Warranty

Provide a warranty to the proprietor covering the whole of the work for a period of years after Practical Completion. Warranty to cover roof penetrations.

## PART II MATERIALS

### 201 Manufacturers

Acceptable manufacturers include:
Safya Group Tel: 1300 301 755.
CAPITAL Safety Group Tel: 1800 245 002.

**202 Materials**

| Item | Description | Manufacturer/Supplier |
|---|---|---|
| Anchors | Type 316 stainless for metal exposed to weather | |
| Static lines | Type 316 stainless for metal exposed to weather | |
| Equipment | | |
| Eaves platforms temporary | | |
| Fences temporary | | |

Personal harness
Provide two sets of harness equipment each containing:
1x Full body harness
1x Shock absorber
1x 15.0 metre ropeline with length adjuster
1x 1.2 metre double lanyard
3x Anchorage clip
1x Anchor strap
1x Equipment carry bag

**203 Fabrication**
Visit site and accurately measure openings etc. before fabrication.
Before delivery to site, pre-assemble where possible all items to ensure proper fit and dimension of each item. Disassemble and pack carefully for shipping to the site. On delivery and unloading, inspect for damage and arrange immediate replacement if necessary.

**204 Miscellaneous**
Fasteners: provide required bolts, screws, inserts, fasteners, templates and other accessories required for a complete installation.
Co-ordinate with other trades as to the proper fastening systems suitable for the substrates to which the item is to be secured. Refer to project manager if in doubt. Fasten galvanised items with galvanised fasteners.

## PART III EXECUTION

**301 Examination**
Inspect site conditions before fabrication, where possible, and before delivery of materials. Ensure conditions are satisfactory for installation. Arrange for rectification required.
Start of work means total acceptance of relevant conditions.

**302 Preparation**
Check roof framing and other items to which safety equipment is to be fixed.
Ensure that structures local to the installed items are secure.
A senior technical representative of the material supplier is required to be present to check each part of the installation.

**303 Installation**
Ensure tasks and activities comply with the Act, Regulation, Code of Practice or Australian Standards, as relevant.
Secure each item in accordance with Australian Standards.
Arrange with the builder and roofer for penetrations if required through roof materials.
Ensure that penetrations are completely watertight after installation and on completion of the work.

**304 Field Quality Control**
Arrange for inspection of the work before and after completion.

**305 Testing**
Arrange for tests of each item of equipment. Replace items which fail the test.

**306 Portable Equipment**
After tests are completed, provide and hand over portable equipment to the builder. Store where directed.
Builder to hand over the material to proprietor on completion of the work.

**307 Cleaning**
Remove surplus materials and leave the area clean on completion.

**308 Completion**

Complete contracted work in accordance with contract documents and written variation orders issued by the project manager.

**END OF SECTION**

## PART I GENERAL

### 101 Scope

Design, fabricate and install materials with required components, fixings, fabrication techniques, coatings and finishes including but not limited to:

### 102 Related Work

Co-ordinate and co-operate with the following trades:

| | |
|---|---|
| Structural steel | Concrete |
| Wall framing | Floor framing |
| Mechanical | Electrical |

### 103 Quality Assurance

A. The products specified herein are proprietary items manufactured and supplied by specialist fabricators. Manufacturer is required to submit written verification of quality of aspects of materials and performance.

B. Provide certificates prepared by relevant testing authorities stating that the materials comply with fire-rating and other characteristics claimed by the manufacturer, and qualities required by the relevant statutory authorities.

C. Pre-installation conference.
Arrange for a conference to establish and settle matters regarding the site installation methods and time schedule.

D. Installation and application at the site is required to be performed in accordance with the requirements of relevant statutory authorities.

### 104 References

Comply with applicable portions of the following Australian Standards:

| | | |
|---|---|---|
| AS 1530 | Methods for fire tests on building materials, compounds and structures. *There are 7 parts, 2 Amdt, 1992 – 2007.* | |
| AS 1603 | Automatic fire detection and alarm systems. *There are 12 parts 1996 – 2011 and 4 Amdts, 1996 – 2001.* | |
| AS 1670 | Fire detection, warning, control and intercom systems - System design, installation and commissioning. *There are 4 parts, 1997 – 2004, plus 1 Amdt, 2005.* | |
| AS 1682 | Fire Dampers. | |
| | 1682.1 1990 | Specification. |
| | 1682.2 1990 | Installation. |
| AS 2118.4 | Automatic fire sprinkler systems - Residential | |
| AS 3784.1 1990 | Coatings for fire protection of building elements – Guide to selection and installation of sprayed mineral coatings. | |
| AS 3959 2009 | Construction of buildings in bushfire-prone areas. *Plus 3 Amdts 2009-2011* | |
| AS 4072.1 2005 | Components for the protection of openings in fire-resistant separating elements – Service penetrations and control joints. *Plus 1 Amdt, 2006.* | |
| AS 5414 2012 | Bushfire water spray systems | |
| Bushfire Set 2009 | | |
| HB 37.4 1994 | Handbook of Australian fire Standards – Building materials, products and construction. | |

### 105 Submission Required Prior to Fabrication

A. Complete system description including the following information:
   1. Names of manufacturers of products.
   2. Names, addresses and telephone numbers of local representatives for products.
   3. Types, names of products, and indication whether products are "off the shelf" or custom fabricated. Include specific information on finishes - thicknesses, patented process name, process description and test data.
   4. Detailed system description including standard details and manufacturer's literature

B. Statement that the proposed system meets the regulatory requirements, for fire protection and warranty requirements specified.

C. Shop Drawings: refer Document 00800 SUPPLEMENTARY CONDITIONS OF CONTRACT, clause 27. Provide Shop Drawings showing the following information where appropriate to the items:
   1. Layout (sectional plan and elevation of complete assembly).
   2. Full size section of members.
   3. Methods of assembly.
   4. Methods of installation, including fixings, anchorage, caulking.
   5. Provision for expansion (thermal).
   6. Junctions and trim to adjoining surfaces.
   7. Fittings and accessories.

D. Sealants: submit manufacturer's product specifications, handling, installation/curing instructions, and performance tested data sheets for each elastomeric product required. Submit certificate of test reports for elastomeric sealants on aged performance, including hardness, stain resistance, adhesion, cohesion

or tensile strength, elongation, low-temperature flexibility, compression set, modulus of elasticity, water absorption and resistance (ageing, weight loss, deterioration), exposure to heat, ozone and ultraviolet light.

**106 Delivery, Handling and Storage**

Deliver the materials to the site in a totally satisfactory condition. Provide security for materials not installed, from loss of damage by weather or other cause.
Do not install damaged components or panels; remove and replace.

**107 Project Site Conditions**

Do not install wet processes in wet weather, or when temperature is less than 4ºC or more than 35ºC.

**108 Warranty**

Provide to the project manager a written warranty stating that components of the complete installation will remain intact and in a satisfactory condition for years from the date of Practical Completion.

## PART II MATERIALS

**201 Acceptable Manufacturers**

**202 Design Criteria**

All materials to be erected/applied are to meet the following criteria.

A. Structural movement (of building).
B. Thermal movement.
C. Wind load on panels.
D. Dead load of panels and support structure.
E. Fire resistance requirements.
F. Anchor bolts to secure panels and support structure to building.

**203 System Components**

Where proprietary items are specified, comply with manufacturer’s/suppliers recommendations.

**204 Fabrication**

A. Provide and fabricate frame and support structures.
B. Check site dimensions before fabrication of components. Tolerances are not to exceed +3mm, -3mm.
C. Schedule fabrication in accordance with contractor's construction program.
D. Mark each item for easy identification.

**205 Source Quality Control**

The engineer and project manager will make random inspections at various stages of works during installation. Make available items needed for inspection and verification of compliance with this specification.

## PART III EXECUTION

**301 Examination**

Examine conditions at the site before delivery of materials and prior to the commencement of installation.
Arrange with contractor for correction of non-optimum conditions.
Start of work means total acceptance of conditions.

**302 Preparation**

Ensure tasks and activities comply with the Act, Regulation, Code of Practice or Australian Standards, as relevant.
Protect by appropriate means adjoining surfaces of the building which may be damaged during the installation.

**303 Installation**

Install/apply all fireproofing materials in locations as instructed and as detailed on the documents. Secure in final position.
Comply with supplier's/manufacturer's installation recommendations.

**304 Sealants**

At junctions with other materials, insert into opening a backing rod, wedged firmly in place. Apply over the backing rod an approved fireproofing sealant, to colour selected by the project manager.
Comply with supplier's/manufacturer's installation recommendations.

**305 Field Quality Control**

A representative or system supplier is required to be present during the installation of fireproofing materials in the building.

**306 Repairs**

Repair damaged surfaces which may have been damaged during installation.
Make good the surfaces and reinstate material integrity, all in strict accordance with manufacturer's instructions.

**307 Protection**

Protect the installation until completion of the project. Prevent damage to completed work by necessary means.

**308 Cleaning**

On completion, clean up debris, remove support structures, scaffolding and the like. Leave work and surfaces in entirely clean and uniform condition.

**309 Completion**

Complete contracted work in accordance with contract documents and written variation orders issued by the project manager.

**END OF SECTION**

## PART I GENERAL

**101 Scope**

Supply and install a complete system of approved fire doors, frames and hardware, including but not limited to the following:
Standard fabricated door frames
Fire doors, doors
[ Fire shutters
Hinges (refer Door Schedule at the end of this document)
All required fastening systems
Factory prime painting.

**102 Related Work**

Co-ordinate and co-operate with the following trades:

| | |
|---|---|
| Masonry | Concrete |
| Wall construction | Doors and door frames |

Finish hardware (except hinges) including supply of hardware templates.

**103 Quality Assurance**

Approved manufacturers: refer clause 201.
Submit evidence that tradesmen are fully trained and experienced in installation methods and permit only approved personnel on the site.

**104 References**

Comply with applicable portions of the following Australian Standards:

| | | |
|---|---|---|
| AS 1428 | Design for access and mobility. | |
| | 1428.1 2009 | General requirements for access – New building work. |
| | *There are 5 other parts. 1992 – 2010.* | |
| AS 1530 | Methods for fire tests on building materials, compounds and structures. | |
| | *There are 7 parts,1993 – 2007. 2 Amdts, 1992 - 1993* | |
| AS 1905 | Components for the protection of openings in fire-resistant walls. | |
| | AS/NZS 1905.1 2005 | Fire-resistant door sets. |
| | AS 1905.2 2005 | Fire-resistant roller shutters. |
| AS 6905 2007 | Smoke doors. | |

**105 Submissions**

A. Submit schedules and samples for approval within 15 days of written notice or award of the contract has been received.
B. Test prototype: ensure that doors and frame assemblies supplied below are identical in construction to a prototype assembly which has been tested in accordance with the provisions of AS/NZS 1905 and AS 1530, except as permitted under AS/NZS 1905.
C. Marking: mark and tag doors and frames in accordance with the provisions of AS/NZS 1905.

**106 Submissions Required at Completion of Work**

Certification of Compliance and Log Book in accordance with AS/NZS 1905.

**107 Delivery, Handling and Storage**

Packing and marking: provide screws, bolts and fastenings necessary for proper installation, wrapped in paper and packed in the same package as the hardware. Legibly label each package, indicating that portion of the work for which it is intended.
Deliver doors and frames cartoned or crated to provide protection during transit and job storage.
Inspect materials upon delivery for damage. Minor damage may be repaired provided finish items are equal in respects to new work and acceptable to project manager; otherwise, remove and replace damaged items as directed.
Store doors and frames at building site under cover. Place units on wood packers at least 100mm high, or otherwise store on floors in a manner that will prevent rust and damage. Avoid use of non-vented plastic or canvas shelters which could create a humidity chamber. If cardboard wrapper on door becomes wet, remove carton immediately. Provide 6mm spaces between stacked doors to promote air circulation.

**108 Project Conditions**

Refer clause 301. Check and confirm dimensions at the site before starting fabrication.

## PART II MATERIALS

**201 Acceptable Manufacturers**

Doors and frames:

**202 Materials - Doors and Frames**

Doors:
fire resistant plywood face sheets, mineral core, identical in construction to tested and approved assembly rated for opening rating required. Comply with AS/NZS 1905.
Support and anchors: fabrication of galvanised sheet steel or wire as required:
Wire ties: standard, 3mm minimum, 8 or 10 per frame, in accordance with AS/NZS 1905.
Strap: minimum 25mm x 3mm low carbon steel.
Inserts, bolts and fasteners: manufacturer's standard units, including hot-dip galvanised items to be built into exterior walls.
Fit each frame with 2 black rubber stops on the closing side.
Supply frames fitted with 1 galvanised 35mm x 12mm x 1.2mm sheet steel channel floor spreader.
Shop applied paint: rust inhibitive primer to steel ready to receive finish coats on site. Refer Schedule of Finishes for Doors.

**203 Fabrication**

General: fabricate steel frame units to be rigid, neat in appearance and free from defects, warp or buckle.
Electrically weld corners and grind welds flush in accordance with AS/NZS 1905.

## PART III EXECUTION

**301 Examination**

Inspect site conditions.
Start of work means total acceptance of conditions.
Ensure that installation conditions will permit the specified requirements.

**302 Manufacturer's Instructions**

Comply with manufacturer's printed instructions except where more stringent requirements are shown, and except where manufacturer's technical representative directs otherwise.

**303 Compliance with Standards**

Be responsible for ensuring that the installation of doors and frames furnished is in full compliance with AS/NZS 1905.
Anchor and fully grout frames installed in masonry walls in conformance with the provisions of AS/NZS 1905.
Furnish required anchors and supervise installation to ensure installation is in compliance with the Standards.

**304 Installation of Frames**

Ensure tasks and activities comply with the Act, Regulation, Code of Practice or Australian Standards, as relevant.
In masonry walls: erect and secure frames plumb and true, providing bracing as required to maintain frames in positions until permanent anchors are set. Do not remove spreaders until frames are secure.
In off-form concrete openings: erect frames plumb and true within openings in accordance with one of the methods shown in AS/NZS 1905.
Clearance between concrete face and door frames (top and sides): nominal 20mm; maximum 25mm.
Finish hardware preparation: prepare doors and frames to receive finish hardware in accordance with Schedule of Finishes and templates provided by hardware supplier. Comply with requirements of AS/NZS 1905 for door and frame preparation for hardware. Reinforce doors and frames to receive surface-applied finish hardware.
Provide tapped holes for fittings.
Provide each frame with mortar-proof universal strike mortise blockout.
Provide each frame with provision for recessed hinges, with hinge reinforcement of not less than 3mm steel sheet, drilled and tapped to receive hinge screws.
Provide each frame to receive a closer with appropriate head stiffeners.
Frames with surface closers: 3mm steel stiffener.
Stiffen the head of each frame of doors in masonry with a welded steel section to accept the weight of masonry above.
Supply each frame with required hinges, welded to frame or loose, as specified on the Schedule of Door Furniture and Hardware.

**305 Grout**

Grout frames mounted in masonry openings with 1 part Portland Cement and 3 parts sand, with sufficient water for pressure grouting.
Provide bracing as required during grouting to maintain frame in true position.
Form face of grout to a nominal 5mm back from the face of the frame.

**306 Finish**

Clean frames thoroughly after assembly. Touch up with rust-inhibitive primer. Refer Schedule of Finishes.
Make good surface imperfection of doors.

**307 Numbering of Doors**

Number doors and frames to match Door Schedule.

**308 Installation and Adjustment**

Hang doors in strict compliance with manufacturer's recommendations and the applicable provisions of AS/NZS 1905.

Adjust doors to frames to obtain precise clearances.

Adjust door hardware to complete and proper operating conditions.

**309 Cleaning and Protection**

Properly clean work of this section and protect as necessary under various working conditions to avoid damage of any nature.

Repair or replace damaged parts, including repairs to adjacent work damaged in connection with work in this section.

**310 Certification**

Refer clause 106.

**311 Completion**

Complete contracted work in accordance with contract documents and written variation orders issued by the project manager.

**END OF SECTION**

## PART I GENERAL

### 101 Scope

Supply and install timber doors and timber [or steel] door frames including but not limited to:

A. EXTERNAL DOORS
- Timber doors in timber frames (jambs).
- Timber doors in metal frames (jambs).
- Glazed doors.
- Solid core doors.
- Waterproof doors.
- Timber louvred doors.
- Flyscreen doors.
- Security doors.
- Acoustic doors.

B. INTERNAL DOORS
- Flush panel doors - hollow core.
- Flush panel doors - solid core.
- Timber or metal frames (jambs).
- Acoustic doors.
- Glazed doors.
- Expressed frame doors.

### 102 Related Work

Co-ordinate and co-operate with the following trades:

| | |
|---|---|
| Carpentry | Joinery |
| Blockwork | Brickwork |
| Plasterboard | Fire-rated doors and frames |
| Metalwork | Glass and glazing |
| Painting | Electrical |

### 103 Quality Assurance

Prototype: at a location selected by the project manager construct a complete prototype installation of:

Include in each prototype elements required by this specification, finished in every respect. When approved by the project manager, each prototype remains part of the work and becomes the standard for the remaining work.

### 104 References

Comply with applicable portions of the following Australian Standards:

| | | |
|---|---|---|
| AS 1288 2006 | Glass in buildings - Selection and installation. *Plus 1 Supplement, 2006, and 2 Amdt, 2008 - 2011.* | |
| AS 1428 | Design for access and mobility. | |
| | 1428.1 2009 | General requirements for access – New building work. *There are 5 other parts. 1992 – 2010.* |
| AS/NZS 1859 | Reconstituted wood-based panels - Specifications | |
| | 1859.1 2004 | Particleboard. *Plus 2 Amdt, 2006 - 2011.* |
| | 1859.2 2004 | Dry processed fibreboard. *Plus 2 Amdts, 2006.* |
| | 1859.3 2005 | Decorative overlaid wood panels. *Plus 1 Amdt, 2009*. |
| | 1859.4 2004 | Wet-processed fibreboard. |
| AS/NZS 2272 2006 | Plywood – Marine. | |
| AS 2688 1984 | (Obsolescent) Timber doors. | |
| AS 2689 1984 | (Obsolescent) Timber doorsets. | |
| AS 4145 | Locksets and hardware for doors and windows. *There are 4 parts, 2001 – 2008 plus 2 Amdts, 2009.* | |
| AS 5007 2007 | Powered doors for pedestrian access and egress. | |
| AS 5039 2008 | Security screen doors and security window grilles. | |

### 105 Submissions

Submit the following for inspection by the project manager before installation:
Product literature on proposed hardware items.
Samples of items as requested by project manager.

### 106 Delivery, Handling and Storage

Deliver specified items shortly before installation is due to occur.
Prevent damage and deterioration during transport and handling.
Store carefully at site in a secure area. Prevent twisting and warping of doors. Note the condition requirements of clause 304.

**107 Warranty**

Provide to the proprietor a warranty covering faulty materials, and installation, warping of materials and other faults which may occur within years of Practical Completion.

## PART II MATERIALS

**201 Acceptable Manufacturers**

**202 External doors**

Comply with AS 2688 Timber doors.

A. Timber doors
Size: refer Door Schedule
Thickness:(total): 40mm
Material: cedar, kiln dried hardwood.
Rails: top:
bottom:
centre:

B. Timber frames (jambs)
Thickness: material: cedar, kiln dried hardwood
Rebates: single, double

C. Fly screen doors: metal frame, timber frame,
Manufacturer:
Screen material: fibreglass, aluminium, stainless steel

D. Security screen doors: metal frame, timber frame
Manufacturer:
Screen material: fibreglass, aluminium, stainless steel
Comply with AS 5039.

E. Steel frames: pressed steel 1.6mm thick single [or double] rebated fully welded frames with floor spreader. Provide 8 or 10, 3mm wire ties per frame for building into walls and 2 black stops on closing side. Grout back of frames with cement mortar.
Supply steel frames with shop applied rust inhibitive paint.

F. Fire-rated doors
Refer trade section 08100 FIRE-RATED DOORS AND FRAMES.

G. Solid-core doors
Thickness total: minimum 40mm
Core: particleboard
Face each side: plywood veneer, hardboard, waterproof plywood, metal faced
Edge strips: 10mm hardwood. Total plywood thickness:

H. Acoustic doors
Thickness total:
Core: mineral, particle board
Edge strips: 10mm hardwood
Acoustic seals:

I. Louvred doors
Frame: metal or timber

Total thickness:
Louvres: aluminium, galvanised steel.

Inverted V shape

J. Glazed Timber doors
Timber frame: cedar, hardwood
Glass: comply with AS 1288. Type:
Provide 10mm hardwood frame around glass panel.

**203 Internal Doors**

Comply with AS 2688.

A. Hollow core, Flush panel
Core: paper, honeycomb, metal
Frame of door: timber with 3 Rails 125mm deep
Face: 4.5mm hardboard, selected veneer. Plywood thickness:
Edge strips: to 2,3 or 4 sides of door, 10mm thick hardwood
Minimum thickness: 35mm,

B. Solid core, Flush panel
Frame of door: timber with top mid and bottom rails
each 50mm deep
Core: medium density particle board
Face: 4.5mm hardboard. Selected veneer, plywood thickness:
Edge strips: to 2, 3 or 4 sides of door, 10mm thick hardwood

Minimum thickness: 35mm,

C. Timber jambs
Material: Selected kiln dried hardwood, cedar,
Thickness of material: Minimum 20mm
Stops: of same material, 10mm

D. Steel jambs
See 202E above.

E. Glazed timber doors
Material: frame of door, kiln dried hardwood or cedar or
Rails and panels: as for frames.
Frame sizes: stiles and rails 130 x 40 bottom rail 220 x 40, all rebated 12mm for glass.
Glazing beads: 12mm thick, shaped, of same material as door frame.
Glass panel: comply with AS 1288.
Lower panel:

F. Timber louvre doors
Manufacturer:
Material: Cedar
Sizes: each leaf: 2, 3, 4 leafs.
Total opening width.

## PART III EXECUTION

### 301 Examination
Inspect site conditions. Ensure conditions are satisfactory for installation.
Start of work means total acceptance of conditions.

### 302 Preparation
Ensure tasks and activities comply with the Act, Regulation, Code of Practice or Australian Standards, as relevant.
Prepare openings in walls or other structures before installation. Install fixing grounds and inserts as required to secure frames.

### 303 Installation of Door Frames
Erect frames plumb and true. Brace as required until surrounding structure is complete. Comply with AS 2689.

### 304 Installation of Doors
Comply with manufacturer's instructions and AS 2689. Reject doors which do not comply with AS 2688 Appendix A. Condition doors to average humidity in area prior to hanging.
Align doors to frame for proper fit and uniform clearance at edge and machine for hardware. Seal cut surfaces after machining.
Provide clearance of 3mm at jambs and heads; 3mm at meeting stiles at pairs of door; 12mm from bottom of door to top of floor finishing or covering. At thresholds provide 6mm clearance.

### 305 Installation of Hardware
Refer Schedule of Door Furniture and Hardware. Check deliveries on arrival. Keep items locked until needed. Assume responsibility for delivered items. Fit accurately and at correct heights, protect with heavy cloth until completion of project.
Label keys, and hand over to contractor.
Master key locks as instructed.

### 306 Adjustment and Cleaning
Adjust each door in its frame and ensure silent operation. Oil locks and hinges. Clean all surfaces marked during the installation of door frames, doors and hardware.

### 307 Completion
Complete contracted work in accordance with contract documents and written variation orders issued by the project manager.

**END OF SECTION**

## PART I GENERAL

### 101 Scope

Supply, engineer and install roller shutter door(s) including but not limited to:
Drum support.
Door guides.
Removable (wicket) gate.
Manual control devices.
Electric motors and controls.
Remote control.
Locking devices.
Wind locks.
Weatherstrips.
Tapered bottom rail.
Powder coating.

### 102 Related Work

Co-ordinate and co-operate with the following trades:

| | |
|---|---|
| Structural steel | Brickwork |
| Blockwork | Concrete |
| Electrical | Painting |

### 103 Quality Assurance

Craftsmen are required to be experienced and familiar with the quality required in this class of work.
Comply throughout with manufacturer's instructions.

### 104 References

Comply with applicable portion of the following Australian Standards:

| | |
|---|---|
| AS 1905.2 2005 | Components for the protection of openings in fire-resistant walls – Fire-resistant roller shutters. |

Comply with requirements of statutory and local authorities.

### 105 Shop Drawings

Comply with DOCUMENT 00800 SUPPLEMENTARY CONDITIONS OF CONTRACT, clause 27.
Provide Shop Drawings for major items supplied hereunder.

A. Contract drawings and details provided are indicative as to general and minimum requirements, and do not show conditions.
B. Develop details not shown and in conformity with the indicative details shown.
C. Take and confirm dimensions on site, before preparing Shop Drawings where possible.
D. Submit detailed Shop Drawings for fabrication and installation of major metalwork. Show plans, elevations and detailed sections; indicate materials, finishes, types of joinery, fasteners, anchorages and accessory items. Provide setting diagrams and full-scale templates of blocking, anchorages, sleeves and bolts installed by others.

### 106 Samples

A. Sample welds: if requested, provide samples of weld types, including samples of railings joined at right angles and at typical acute angles, welded and ground smooth, for approval. If not acceptable, provide additional samples until approved. When approved, samples will establish quality of similar work of this trade section.
B. Check on delivery: request project manager to check materials on delivery to site for quality, and materials not meeting the requirements of this specification or equal to approved samples will be rejected.
Return rejected materials to the fabricator at the fabricator's expense.
C. Finish: provide samples of specified finishes when requested.

### 107 Warranty

Provide to the proprietor a warranty, counter-signed by the installer, on the whole of the installation, which states that work will remain intact, waterproof and fully operational for the period of not less than years after date of Practical Completion.

## PART II MATERIALS

### 201 Acceptable Manufacturers

### 202 Materials

**203 Finish**

Powder coating: polyester over pre-treatment by powder coater.
Colour:
Paint: refer Schedule of Finishes.

**204 Miscellaneous Items**

Fasteners: provide required bolts, screws, inserts, fasteners, templates and other accessories required for a complete installation.
Co-ordinate with other trades as to the proper fastening systems suitable for the substrates to which the item is to be secured. Refer to project manager if in doubt.
Fasten galvanised items with galvanised fasteners.

## PART III EXECUTION

**301 Examination**

Inspect site conditions before fabrication, where possible, and before delivery of materials. Ensure conditions are satisfactory for installation. Arrange for rectification required.
Start of work means total acceptance of relevant conditions.

**302 Preparation**

A. Ensure tasks and activities comply with the Act, Regulation, Code of Practice or Australian Standards, as relevant.
B. Field measurements: do not delay job progress. Allow for adjustments and fitting of the work in the field where taking of measurements might cause delay.
C. Co-ordination with work of others: furnish to each relevant trade foreman anchorages and setting drawings, diagrams, templates and instructions for installation of items having integral anchors which are to be embedded in concrete or masonry construction. Co-ordinate delivery of such items to the project site.

**303 Inspection and Reinstatement**

A. Check fabrications as they are unloaded at the project site for evidence of physical damage.
Treat damaged fabrications as follows:
1. Misshaped items: return to shop for repair or replacement.
2. Damaged surface treatment: repair as recommended by application of the finish.
B. Verify anchors, bolts and other required anchorage items for proper size and accurate location prior to erection.

**304 Installation**

A. Anchorage: except for anchorages furnished herein but placed by other trades, set and secure necessary anchorages, including concrete and masonry inserts, bolts, wood screws and other connectors as needed. Perform cutting, drilling and fitting as needed, locating anchorages and holes to ensure proper positioning of completed work.
B. Fit: during installation and assembly, form tight joints with exposed connections accurately fitted, and reveals uniform. Finish work accurately, plumb, level, square and true in reference to adjacent construction.
C. Finish: do not cut or abrade shop finishes which cannot be completely restored in the field.
The use of gas-cutting torch in the field for correcting fabrication errors will not be permitted.
Fabrications may be cut shorter with power hacksaws on site.
Isolate dissimilar metals likely to be subject to moisture with inert materials, not visible on completion of installation.
D. Comply with manufacturers' installation instructions throughout.

**305 Field Quality Control**

Where considered necessary by the project manager, arrange for supervision of the installation by a senior staff member of the manufacturer.

**306 Protection**

Protect the completed installation from damage by appropriate means until completion of the project.

**307 Cleaning**

Clean materials installed to the satisfaction of the project manager.
Apply necessary lubrication.
Remove temporary protective coating.

**308 Completion**

Complete contracted work in accordance with contract documents and written variation orders issued by the project manager.

**END OF SECTION**

## PART I GENERAL

### 101 Scope

Supply, engineer and install folding door(s) (and grilles) including but not limited to:
Overhead support
Door guides
Manual control devices
Electric motors and controls
Remote control
Locking devices
Weatherstrips
Surface treatment

### 102 Related Work

Co-ordinate and co-operative with the following trades:

| | |
|---|---|
| Structural steel | Brickwork |
| Blockwork | Concrete |
| Electrical | Painting |

### 103 Quality Assurance

Craftsmen are required to be experienced and familiar with the quality required in this class of work.
Comply throughout with manufacturer's instructions.

### 104 References

AS 1428 Design for access and mobility.
1428.1 2009 General requirements for access – New building work.
*There are 5 other parts. 1992 – 2010.*
Comply with requirements of statutory and local authorities.

### 105 Shop Drawings

Comply with DOCUMENT 00800, clause 27.
Provide shop drawings for major items supplied hereunder.

A. Contract drawings and details provided are indicative as to general and minimum requirements, and do not show conditions.
B. Develop details not shown and in conformity with the indicative details shown.
C. Take and confirm dimensions on site, before preparing shop drawings where possible.
D. Submit detailed shop drawings for fabrication and installation of major metalwork. Show plans, elevations and detailed sections; indicate materials, finishes, types of joinery, fasteners, anchorages and accessory items. Provide setting diagrams and full-scale templates of blocking, anchorages, sleeves and bolts installed by others.

### 106 Samples

A. Sample welds: if requested, provide samples of weld types, including samples of railings joined at right angles and at typical acute angles, welded and ground smooth, for approval. If not acceptable, provide additional samples until approved. When approved, samples will establish quality of similar work of this trade section.
B. Check on delivery: request project manager to check materials on delivery to site for quality, and materials not meeting the requirements of this specification or equal to approved samples will be rejected.
Return rejected materials to the fabricator at the fabricator's expense.
C. Finish: provide samples of specified finishes when requested.

### 107 Warranty

Provide to the proprietor a warranty, counter-signed by the installer, on the whole of the installation, which states that work will remain intact, waterproof and fully operational for the period of not less than years after date of Practical Completion.

## PART II MATERIALS

### 201 Acceptable Manufacturers

### 202 Materials

### 203 Finish

Powder coating: polyester over pre-treatment by powder coater.
Colour:
Paint: refer Schedule of Finishes.

**204 Miscellaneous Items**

Fasteners: provide required bolts, screws, inserts, fasteners, templates and other accessories required for a complete installation.
Co-ordinate with other trades as to the proper fastening systems suitable for the substrates to which the item is to be secured. Refer to project manager if in doubt.
Fasten galvanised items with galvanised fasteners.

## PART III EXECUTION

**301 Examination**

Inspect site conditions before fabrication, where possible, and before delivery of materials. Ensure conditions are satisfactory for installation. Arrange for rectification required.
Start of work means total acceptance of relevant conditions.

**302 Preparation**

A. Ensure tasks and activities comply with the Act, Regulation, Code of Practice or Australian Standards, as relevant.
B. Field measurements: do not delay job progress. Allow for adjustments and fitting of the work in the field where taking of measurements might cause delay.
C. Co-ordination with work of others: furnish to each relevant trade foreman anchorages and setting drawings, diagrams, templates and instructions for installation of items having integral anchors which are to be embedded in concrete or masonry construction. Co-ordinate delivery of such items to the project site.

**303 Inspection and Reinstatement**

A. Check fabrications as they are unloaded at the project site for evidence of physical damage.
   1. Treat damaged fabrications as follows:
      Mis-shaped items: return to shop for repair or replacement.
   2. Damaged surface treatment: repair as recommended by applicator of the finish.
B. Verify anchors, bolts and other required anchorage items for proper size and accurate location prior to erection.

**304 Installation**

A. Anchorage: except for anchorages furnished herein but placed by other trades, set and secure necessary anchorages, including concrete and masonry inserts, bolts, wood screws and other connectors as needed. Perform cutting, drilling and fitting as needed, locating anchorages and holes to ensure proper positioning of completed work.
B. Fit: during installation and assembly, form tight joints with exposed connections accurately fitted, and reveals uniform. Finish work accurately, plumb, level, square and true in reference to adjacent construction.
C. Finish: do not cut or abrade shop finishes which cannot be completely restored in the field.
   1. The use of gas-cutting torch in the field for correcting fabrication errors will not be permitted. Fabrications may be cut shorter with power hacksaws on site.
   2. Isolate dissimilar metals likely to be subject to moisture with inert materials, not visible on completion of installation.
D. Comply with manufacturers' installation instructions throughout.

**305 Field Quality Control**

Where considered necessary by the project manager, arrange for supervision of the installation by a senior staff member of the manufacturer.

**306 Protection**

Protect the completed installation from damage by appropriate means until completion of the project.

**307 Cleaning**

Clean materials installed to the satisfaction of the project manager.
Apply necessary lubrication.
Remove temporary protective coating.

**308 Completion**

Complete contracted work in accordance with contract documents and written variation orders issued by the project manager.

**END OF SECTION**

## PART I GENERAL

### 101 Scope

Work to be performed includes, but is not limited to, design including structural design, manufacture, supply delivery, installation, protection, removal of protection, completion and cleaning of:

A. Silicone butt jointed and glass finned facade panels.
B. Metal framing to head and sill.
C. Glazed doors and side lights.
D. Drained sills and joint systems.
E. Penetrations through glass for requirement, e.g. exhaust fans, drenchers, etc.
F. Glass fin support as required in the structural glazing design as determined by the glazing contractor's structural engineer.
G. Other items required including weather and seals, draught excluders, sealants, glazing accessories, fixings, brackets, ceiling suspensions, fastenings, attachments, packing and other items necessary to guarantee the structural sufficiency water-tightness, weather-tightness and satisfactory performance and appearance of the completed building.

### 102 Related Work

A. Work of this section depends upon the proper completion of prior work by others as follows:
   1. Concrete.
   2. Structural steelwork.
   3. Masonry.
B. Work of this trade section is to create conditions suitable for the proper completion of subsequent work by others including:
   1. Walls abutting glazed wall construction.
   2. Other work in close proximity to installations specified herein.
   3. Painting.
C. Work of this trade section is to be performed in close co-ordination with the work of others as follows:
   Concrete.
   Masonry.
   Structural steel .
   Roofing, etc. electrical security, fireproofing and fire services.

### 103 Quality Assurance

A. Manufacturer qualifications: not less than 10 years continuous experience in the manufacture of the product types specified.
   Manufacturers not resident to Australia should have representation in Australia with bona fide companies for not less than 5 years.
B. Designer qualifications: system designer or designers are to be licensed professional engineers with tertiary qualifications and specific experience in structural glazing using annealed glass fins. Qualifications and experience are to be provided to the project manager on request, whose written approval of the design engineer is to be obtained prior to the commencement of design or Shop Drawings.
C. Installer qualifications: installation contractor is to have no less than 10 years continuous experience in the erection of structural glazing using annealed glass fins; such experience to be acceptable to the project manager. Additionally, the contractor is required to provide satisfactory evidence of sufficient staff of metalworkers, glaziers and sealant mechanics to maintain the scheduled progress of the works. The builder is to employ on site during stages of the work a foreman competent to supervise the work.
D. Manufacturer's licence of fabricator: where part of the vision glazing, spandrel panel and framing system is manufactured by other than one manufacturer, the glass manufacturer is to license or certify the acceptability of other manufacturers/fabricators. Where frame sections are extruded or fabricated to standard framing system patterns by other than the primary manufacturer or patent-holder of such systems, the patent-holder is to license the manufacturer/fabricator of such sections and will provide quality control and source production monitoring satisfactory to the project manager. Copies of such required licenses and certifications will be provided to the project manager as well as copies of quality control and inspection reports.
E. "Close Co-ordination Required" Items: where paragraph 102 Related Work identifies other trade sections as requiring close co-ordination, the builder is to accept full responsibility for providing the trades of such sections with complete information on the materials and equipment to be installed, the critical dimensions of such work, and other data affecting the work of the trades identified. Where submissions include such critical information, copies of the approved submissions are to be sent promptly to such trades via the project manager, builder, sub-contractors and vendors who are to make special effort to ensure the proper sequence and fit of the work to be completed. Special efforts will include as necessary:
   1. Frequent on-site meetings with the builder to review requirements and procedures.
   2. Simultaneous on-site performance of tasks by 2 or more sub-contractors.
   3. Review by builder of submissions by others.
   4. Special care given to tolerances and dimensional verifications.

5. All glazing items, techniques, sizes, tolerances, deflections, etc., are to be discussed with the glaziers and glass manufacturers and the submitted drawings will be signed by the window manufacturer and the glazier as being their true, agreed principles under which they will take out the specified guarantee for their work.

**104 References**

Comply with applicable portions of the following Australian Standards:

| | | |
|---|---|---|
| AS/NZS 1170 | Structural design actions. | |
| | 1170.0 2002 | General principles. *Plus 5 Amdts, 2003 – 2011.* |
| | 1170.1 2002 | Permanent imposed and other actions. *Plus 2 Amdts, 2005 – 2009.* |
| | 1170.2 2011 | Wind actions. |
| | *There are 2 other parts, several Supplements and Amdts, 2002 – 2011.* | |
| AS 1288 2006 | Glass in buildings - Selection and installation. *Plus 1 Supplement, 2006 and 2 Amdts, 2008 - 2011.* | |
| AS 1428 | Design for access and mobility. | |
| | 1428.1 2009 | General requirements for access – New building work. |
| | *There are 5 other parts. 1992 – 2010.* | |
| AS 2047 1999 | Windows in buildings - Selection and installation. *Plus 2 Amdts, 2001.* | |
| AS/NZS 2208 1996 | Safety glazing materials in buildings. *Plus 1 Amdt, 1999.* | |
| AS 3715 2002 | Metal finishing - Thermoset powder coating for architectural applications of aluminium and aluminium alloys. | |
| AS 5007 2007 | Powered doors for pedestrian access and egress. | |
| ASTM E283-04 (2012) | Standard test method for determining rate of air leakage through exterior windows, curtain walls, and doors under specified pressure differences across the specimen. | |
| ASTM E330-02 (2010) | Standard test method for structural performance of exterior windows, doors, skylights and curtain walls by uniform static air pressure difference. | |
| ASTM E331-00 (2009) | Standard test method for water penetration of exterior windows, skylights, doors and curtain walls, by uniform static air pressure difference. | |
| HB 125-2007 | The glass and glazing handbook. | |

**105 Submissions**

A. Submissions required with tender:

1. Complete system description of the materials and methods of installation being tendered, including the following information:
   a. Names of manufacturers of products.
   b. Names, addresses and telephone numbers of local representatives for products manufactured off-shore or out-of-state.
   c. Name, address and telephone number of glazing contractor.
   d. Types, model numbers and names of products, and indication whether products are "off-the-shelf" or custom fabricated.
   e. Detailed information on products manufactured specifically for this project.
   f. Detailed system description including standard details and manufacturer's literature; and large-scale details of specially-fabricated products.
   g. Detailed description of protective colour coating proposed for metals, with references to examples of prior use. Include description of cleaning agents, if any.
   h. Detailed production schedule based on the working day calendar.
      The schedule is to be keyed into the construction programme and co-ordinated with other contractors whose work may depend upon scheduled start or completion of this contract.
2. Tests and certifications previously performed on proposed systems, including specifically the following:
   a. Long-term or accelerated exposure tests on structural silicone, covering maintenance of bond strength, hardness change and chemical composition.
   b. Tests on sealants including viscosity and colour stability.
3. Examples in Australia of proposed systems, including name, address and telephone number of contact person knowledgeable about each example and not connected with the manufacturer/fabricator.

B. Submissions required prior to fabrication:

1. Samples of glazing and all sections to be used.
2. Statement that the proposed system meets the regulatory requirements, thermal, aesthetic, and weatherproofing criteria, construction, glazing and warranty requirements specified; noting in detail any exceptions.
3. Engineer's calculations on wind loading.
4. Sealants: submit manufacturer's product specification handling/installation/curing instructions, and performance tested data sheets for each elastomeric product required.
   Submit certificate test reports for elastomeric sealants on resistance, adhesion, cohesion or tensile strength, elongation, low-temperature flexibility, compression set, modulus of elasticity, water absorption, and resistance (ageing, weight loss, deterioration) and heat and exposure to ozone and ultraviolet light.

**106 Delivery, Handling and Storage**

Handle all materials with care. Do not store on site. Install directly in place. Store silicone and sealants as instructed by manufacturer.

**107 Project Conditions**

A. General: refer to appropriate clauses in General Conditions and Contract Conditions.
B. Installation of any materials is to imply total acceptance of all on-site conditions.

**108 Warranty**

In addition to the warranty requirements of the General Conditions of Contract, provide the following:

A. Warranty: provide glass manufacturer's written warranty, agreeing to, within specified warranty period, furnish freight paid to project site, replacement units for glass units which have defective hermetic seals (excluding that due to glass breakage), defined to include intrusion of moisture or dirt, internal condensation at temperatures above -2ºC, deterioration of internal glass coatings, and other visual evidence of seal failure or performance failure; provided manufacturer's instructions for handling, installation, protection and maintenance have been adhered to during warranty period.
B. Warranty period is years after date of Practical Completion.

**PART II MATERIALS**

**201 Acceptable Manufacturers**

The manufacturer and installer are to be approved in writing by the project manager.

**202 Structural and Environmental Performance Criteria**

A. Structural criteria:
   1. Terrain Category: adopt Category:
      Refer AS/NZS 1170.
      Computations
      Computations for the design of the glazing and annealed glass fins are to be prepared by a structural engineer approved in writing by the project manager, in accordance with the design criteria specified below and will allow that the members and their fixings comply with strength and stiffness criteria, and for thermal movement and differential movement of the structure.
   2. Structural silicone: only high strength silicone sealants specifically designed and tested for structural glazing will be used. To facilitate application of the structural silicone to finned joints, a backer rod of self-adhesive polyethylene foam is to be used to ensure minimum structural silicone contact is maintained to the fins and the glass panels. Manufacturer’s recommendations must be followed at all times to ensure that the design stresses, gaps, application and preparation techniques, etc., are compatible with type of structural silicone used.
   3. Movement: permit free and noiseless movement of all components due to thermal effects, structural effect, wind pressure, effect of dead loads, without strain on the glass, without buckling of components and without excessive stress to any members or assemblies.
   4. Wind Pressure
B. Weather Protection:
   5. General: the glazed entry facade system will be designed, installed and guaranteed by the builder to be waterproof and weather-proof.
   6. Expansion: design vertical and horizontal expansion joints to provide for weather conditions likely to exist.
   7. Internal drainage: a complete drainage system will be incorporated into the system. Water leakage and condensation will be drained or discharged to exterior face, and internal spaces will be vented by acceptable means to ensure air-pressure equalisation. Movement of water behind and on exposed surfaces are to be controlled to ensure that water is not retained and that elements will not be damaged or corroded by water and to minimise the potential for algae and fungus growth as a result of standing or trapped water.
   8. Sealers: joint sealers are required to establish and maintain air-tight and water-proof continuous seals on a permanent basis, within recognised limitations of wear and ageing as indicated for each application. Failures of installed sealers to comply with this requirement will be recognised as failures of materials and workmanship.

**203 Aesthetic Criteria – Glass**

A. Vision glass
   Strength: toughened and/or heat strengthened and/or laminated, as required.
   Thickness: as required by AS/NZS 1170, Part 2 - and AS 1288 or AS/NZS 2208.
   Colour:
   Reflectance:
B. Glass fins - annealed
   Glass thickness:
   Colour:
C. Glass adjacent to doors
   Strength: toughened safety glass as required.
   Thickness: as required by AS/NZS 1170, Part 2, and AS 1288 or AS/NZS 2208.

Colour:
Reflectance:

D. Door glass
Strength: toughened safety glass and/or heat strengthened and/or laminated, as required.
Thickness: as required by AS/NZS 1170, Part 2, and AS 1288.
Colour:
Reflectance:

E. Laminated glass:
All laminated glass is to be sealed at edges before installation to prevent entry of water to edge of inter-layer. This requirement will be rigidly enforced.
Colour of inter-layer:

F. Sealants
Submit a full range of coloured sealants offered by an approved manufacturer from which the project manager will select. Colours available may be a factor in choice of manufacturer.

G. Metal frames
Coated aluminium. Submit a full range of available colours of coating and metal frame types from which the project manager will select.
Refer clause 203.

H. Distortion
The glazed facade is to be designed and erected to minimise distortion of reflected images.

**204 Aesthetic Criteria - Metal Finish**

Polyester powder coat.
Polyester powder coat, of colour selected by the project manager, 50 microns thick minimum.
Pre-treatment of metal is to be performed in accordance with the requirements of the manufacturer of the finish.
Applicators of the pre-treatment and the powder coat is to be approved by the project manager.
All treated material will be subject to random tests. Material found to have less than 50 microns coating thickness is to be removed and made good without cost to the proprietor or delay in job progress.
Comply with AS 3715.

**205 Metal Materials**

A. Aluminium extrusions throughout are to be manufactured from aluminium alloy B6063 - T5 or T6.
B. Types of materials required: closer, strips, sills, interior linings, copings, heads.
C. Contact with other Materials: Coat aluminium surfaces in contact with mortar, concrete, plaster, masonry, wet-application of fire-proofing and absorptive materials with an anti-galvanic, moisture barrier material.
Isolate aluminium and dissimilar metals excluding non-magnetic stainless steel for the prevention of electrolytic action and corrosion.

**206 Facade Panel Arrangement**

General: refer to drawings. Exact panel and fin sizes are to be determined by system designer.

**207 Fabrication**

Glazing: glass is to be secured in accordance with the manufacturer's recommendations and the relevant Standards.

## PART III EXECUTION

**301 Examination**

A. Site conditions: inspect installation conditions. Correct conditions which may adversely affect the work. Start of work means total acceptance of conditions.
B. Measurements: refer clause 107.
C. Weather conditions: do not proceed with installation of sealants under unfavourable weather conditions. Install elastomeric sealants when temperature is in lower third of temperature range recommended by manufacturer for installation.

**302 Manufacturer's Instructions**

Comply with manufacturer's printed instructions except where more stringent requirements are shown or specified, and except where manufacturer's technical representative directs otherwise in writing.

**303 Frame Anchorage**

A. Anchorage provisions: comply with instructions of approved structural engineering consultant.
B. Contractor's responsibility: be responsible for providing locations for the cast-in anchors well in advance of installation of the structural frame.
C. Fastening system: steel clip angles or other sections: hot-dip galvanised. Aluminium fixing sections: electrolytically isolated from steel inserts by an approved coating or spacer. Bolts and nuts: stainless steel compatible with aluminium (non-magnetic).

**304 Assembly**

General: assemble, secure, anchor, reinforce, seal and make weather-tight in a manner not restricting thermal or wind movements of the completed installation. Where possible, conceal sealants.

**305 Glazing Requirements - General**

A. Make water-tight and air-tight each installation of each glass product.
B. Protect glass from edge damage during handling and installation, and subsequent operation of glazed components of the work. During the installation, discard units with edge damage or other imperfections which the project manager determines may affect the completed work.
C. Set units of glass in each series with uniformity of pattern, draw, bow and similar characteristics.

**306 Joint Preparation - Sealants**

A. Clean joint surfaces immediately before installation of sealant or caulking compound. Remove dirt, insecure coatings, moisture and other substances which could interfere with bond of sealant or caulking compound. Roughen vitreous and glazed joint surfaces as recommended by sealant manufacturer.
B. Prime or seal joint surfaces where recommended by sealant manufacturer.
Do not allow primer/sealer to spill or migrate on to adjoining surfaces.

**307 Installation of Sealants**

A. Ensure tasks and activities comply with the Act, Regulation, Code of Practice or Australian Standards, as relevant.
B. Install sealant backer rod for liquid elastomeric sealants, except where shown to be omitted or recommended to be omitted by sealant manufacturer for application indicated. Install bond breaker tape where indicated and where required by manufacturer's recommendations to ensure that elastomeric sealants will perform properly.
C. Employ only proven installation techniques, which will ensure that sealants are deposited in uniform continuous ribbons without gaps or air pockets, with complete "wetting" of joint bond surfaces equally on opposite sides. Except as otherwise indicated, fill sealant rabbet to a slightly concave surface, slightly below adjoining surfaces. Where horizontal joints are between a horizontal surface and a vertical surface, fill joint to form a slight cove, so that joint will not trap moisture and dirt.
D. Install sealant to depths as recommended by sealant manufacturer.
E. Cure sealants and caulking compounds in compliance with manufacturer's instructions and recommendations, to obtain high early bond strength, internal cohesive strength and surface durability.
F. Remove excess caulking compound and sealant and leave surfaces neat, smooth and clean, without smears on surrounding work. Tool joints where recommended by manufacturer or required. Remove cartons and debris from site as the work progresses.

**308 Protection**

A. Framing system: protect metal surfaces as necessary during erection to prevent mechanical imperfections such as scratches, scrapes, dents, spots, stains and streaks.
B. Glass: protect glass immediately upon installation until Practical Completion. Remove and replace panels which are broken, cracked, abraded, chipped or damaged in other ways before, during or after installation, at no additional cost to the proprietor.
    1. Be responsible for breakage until glazing work is completed and accepted, unless responsibility can be assessed to others.
    2. Inspect glass regularly, until substantial completion to detect formation of staining and/or etching. Remove plaster, mortar, paint spatter, drywall joint compound or other foreign matter immediately after contact; do not permit to remain or collect on glass surface.
    3. Clear formed gutters of foreign matter and maintain in sound, clean condition until Practical Completion.

**309 Protective Coating During Construction**

Adhesive protective coatings are NOT to be used. Protect by other means with the approval of the project manager.

**310 Cleaning**

A. Glass: remove labels, excess glazing compounds, stains, spots and other foreign matter from glass, frames and other finished surfaces.
B. Debris: remove rubbish and debris resulting from glazing operations, each day.
C. Removal of protective coatings: when and as directed by the builder, remove protective coatings from aluminium frames and clean as necessary to remove traces of protective material. Make good damaged surfaces.
D. Final cleaning: immediately prior to Practical Completion clean contract surfaces to the satisfaction of the project manager.

**311 Replacement Stock**

A. Vision glass: provide additional units to be stored on site for future replacement of damaged units as follows:
Quantity: 1% of each unit type installed, but not less than 2 units of type.
B. Delivery: deliver to site at Practical Completion of the project, in crates marked with the size and type of the contents, and put to storage where designated.

**312 Maintenance Instruction**

At a time mutually arranged, provide for a meeting between builder, permanent building maintenance staff and system installation mechanics, to review and instruct maintenance staff in the proper procedures for replacing damaged glazing panels, general maintenance and cleaning procedures for contract surfaces.

**313 Completion**

Complete contracted work in accordance with contract documents and written variation orders issued by the project manager.

**END OF SECTION**

## PART I GENERAL

### 101 Scope

Design, engineer, supply and install a complete system of automatic sliding doors, including but not limited to:
Material type.
Finish type.
Openings.
Glass types.
Glazing methods.
Door operating system.

### 102 Related Work

Co-ordinate and co-operate with the following trades:

| | |
|---|---|
| Metal windows and glazing | Timber windows |
| Glass and Glazing | Metal work |
| Electrical Installation | |

### 103 Quality Assurance

A. Manufacturer qualifications: not less than 10 years continuous experience in the manufacture of the product types specified.
B. Installer qualifications: installer is to have not less than 5 years continuous experience in the erection of specified material.

### 104 References

Comply with applicable portions of the following Australian Standards:

| | | | |
|---|---|---|---|
| AS/NZS 1170 | Structural design actions. | | |
| | 1170.0 2002 | General principles. *Plus 5 Amdts, 2003 – 2011.* | |
| | 1170.1 2002 | Permanent, imposed and other actions. *Plus 2 Amdts, 2005 – 2009.* | |
| | 1170.2 2011 | Wind actions. | |
| | *There are 2 other parts, several Supplements and Amdts, 2002 – 2011.* | | |
| AS 1231 2000 | Aluminium and aluminium alloys - Anodic oxidation coatings. | | |
| AS 1288 2006 | Glass in buildings - Selection and installation. | | |
| | *Plus 1 Supplement, 2006 and 2 Amdts, 2008 - 2011.* | | |
| AS 1428 | Design for access and mobility. | | |
| | 1428.1 2009 | General requirements for access – New building work. | |
| | *There are 5 other parts. 1992 – 2010.* | | |
| AS 2047 1999 | Windows in buildings - Selection and installation. *Plus 2 Amdts, 2001.* | | |
| AS/NZS 2208 1996 | Safety glazing materials in buildings. *Plus 1 Amdt, 1999.* | | |
| AS 3715 2002 | Metal finishing - Thermoset powder coating for architectural applications of aluminium and aluminium alloys. | | |
| AS 5007 2007 | Powered doors for pedestrian access and egress. | | |

Comply with relevant authority's requirement for fire-rated installation.

### 105 Submissions Required Prior to Fabrication

A. Complete system description including the following information:
   1. Names of manufacturers of products.
   2. Names, addresses and telephone numbers of local representatives for products.
   3. Types, model numbers and names of products, and indication whether products are "off the shelf" or custom fabricated. Include specific information on finishes - thicknesses, patented process name, process description and test data.
   4. Detailed information on products manufactured specifically for this project.
B. Statement that the proposed system meet(s) the regulatory requirements, thermal, aesthetic and waterproofing criteria and wind loading, construction, glazing and warranty requirements specified; noting in detail exceptions.
C. Shop Drawings: refer DOCUMENT 00800 SUPPLEMENTARY CONDITIONS OF CONTRACT, Clause 27. Provide Shop Drawings showing the following information where appropriate to the items:
   1. Layout (sectional plan and elevation of complete assembly).
   2. Full size section of members.
   3. Methods of assembly, type and location of exposed screws.
   4. Methods of glazing.
   5. Methods of installation, including fixings, anchorage, caulking, flashings.
   6. Provision for expansion (thermal).
   7. Junctions and trim to adjoining surfaces.
   8. Fittings and accessories.
D. Engineer's calculations on wind loading.
E. Sealants: submit manufacturer's product specifications, handling, installation/curing instructions, and performance tested data sheets for each elastomeric product required. Submit certificate test reports for

elastomeric sealants on aged performance as specified, including hardness, stain resistance, adhesion, cohesion or tensile strength, elongation, low-temperature flexibility, compression set, modulus of elasticity, water absorption, and resistance (ageing, weight loss, deterioration) and heat and exposure to ozone and ultraviolet light.

**106 Delivery, Handling and Storage**

Handle materials with care. Do not store on site. Install directly in place.

**107 Warranty**

Provide to the proprietor a warranty, counter-signed by the installer, on the whole of the installation, which states that work will remain intact, waterproof and fully operational for the period of years after date of Practical Completion.

## PART II MATERIALS

**201 Acceptable Manufacturers**

The following manufacturers are acceptable:

Actuator, detector, control systems.

**202 Materials**

Door frames:
Frame finish: see clause 205.
Glass: refer clause 206.
Sealants: see clause 207.
Actuator:
Detector:
Control systems:

**203 Structural Criteria**

A. Adopt Terrain Category:
   Refer AS/NZS 1170.
B. Wind loading: design:
   1. Glazing and frame assemblies to suit the static and dynamic wind forces as indicated on the tables in the Australian Standard 1170.
   2. Structural members of glazed units of such strength that when tested at the specified design wind values they do not deflect by an amount greater than span/240 and do not cause permanent deflection.
   3. Fix members so that the above loading is generated in the members without stress causing failure or movement becoming evident at joint.
C. Movement: permit free and noiseless movement of the components due to thermal effects, structural effect, wind pressure, effect of dead loads, without strain to glass, without buckling of components and without excessive stress to members or assemblies.
D. Distortion: design the glazed assembly to minimise visual distortion of reflected images.

**204 Detail Design Provisions**

General: the project manager's drawings are to be considered essentially schematic except for profiles of exposed surfaces and panel arrangement where indicated. If, in the opinion of the builder a change of profile is required in order to meet the specification, arrange through the project manager for a review of the condition.
Design the assembly to suit each specified condition in an acceptable manner complying with the requirements specified herein.
Where doors are part of an assembly including fixed adjacent glazing, match frames of doors to the adjacent assembly.

**205 Finish**

Anodising or polyester powder coat
Anodising:
Metal of windows, doors and shop fronts anodised to selected colour.
Pre-treat and apply anodising by applicators approved by the project manager.
Minimum coating thickness of 25 microns subjected to random testing after installation. Remove and replace any non-conforming material.
Comply with requirements of AS 1231.
Polyester powder coat:
Polyester powdercoated, to colour approved by the project manager and by the manufacturer of the powder material, to metal of windows, doors and shop fronts.
Perform pre-treatment and application of powder coating by applicators approved by the project manager and by the manufacturer of the powder material.
Minimum coating thickness of 50 microns subjected to random testing after installation. Non-conforming material will be removed and made good by the builder.
Comply with requirements of AS 3715.

**206 Glass**

A. Glass materials for external use:
Pilkington Australia:

B. Glass material for internal use:
Pilkington Australia:

C. Other glass for:
Pilkington Australia:

D. Calculations: calculate glass sizes and thicknesses in accordance with Standards, and fixing devices and connections to structure in accordance with engineer's computations where applicable.

**207 Sealants and Accessory Materials**

A. Provide non-structural external weatherproofing sealants of low modulus neutral curing silicone rubber compounds by approved manufacture.

B. Generally comply with AS 1288. Supply spacer gaskets, glazing tapes and setting blocks compatible with sealants, which do not contribute to sealant colour change or affect the sealants adhesion to substrates when exposed to ultraviolet light.
Prior to application, samples of materials receiving the silicone, including elastomeric sealants are to be evaluated by the silicone sealant manufacturer for compatibility and primer selection. Clearly identify the submitted materials as to manufacturer and product number.
Use silicone sealants generally clear in colour.

C. Interior sealers: acrylic-emulsion or latex-rubber-modified acrylic emulsion sealant compound, permanently flexible, non-staining and non-bleeding; recommended by manufacturer for protected exterior exposure and general interior exposure.

D. Joint primer/sealer: provide type of joint primer/sealer as recommended by sealant manufacturer to suit each surface.

E. Bond breaker tape: polyethylene tape or other plastic as recommended by sealant manufacturer to be applied to sealant-contact surfaces where bond to substrate or joint filler is to be avoided for proper performance of sealant. Provide self-adhesive tape where applicable.

F. Sealant backer rod: compressible rod stock of polyethylene foam, polyethylene jacketed polyurethane foam, butyl rubber foam, neoprene foam or other flexible permanent, durable non-absorbent material as recommended by sealant manufacturer for compatibility with sealant.

G. Glazing tape: polyisobutylene tape of type, thickness and width as recommended by glass manufacturer and project manager.

H. Exposed screws: countersunk type, anodised aluminium or non-magnetic stainless steel evenly and neatly located in an approved manner. Exposed fasteners: finished to match aluminium.

**208 Fabrication**

Comply with AS 2047.
Framing system: fabricate from extrusions to profiles shown on approved Shop Drawings.
Form junctions so that no fixings, such as pins, screws, pressure indentations and the like are visible on exposed faces. Show on Shop Drawings fixings which will be exposed.
Cut edges, drill holes, rivet joints and clean flat sheets, neat, free from burrs and indentations. Remove sharp edges without excessive deformation. Fit mitred joints accurately to a fine hairline.
Pre-assemble and match mark before delivery.

## PART III EXECUTION

**301 Examination**

Inspect site conditions before start of work on site, before delivery of materials. Ensure all conditions are satisfactory for installation.
Perform rectification required before delivery of materials.
Start of work means total acceptance of conditions.

**302 Preparation**

Ensure tasks and activities comply with the Act, Regulation, Code of Practice or Australian Standards, as relevant.
Prepare surfaces affected by the installation in accordance with material manufacturer's instructions.

**303 Door Sets**

Install door sets in close co-ordination with manufacturer of door operating equipment and in compliance with AS 5007.

**304 Glazing**

Secure glass in accordance with glass manufacturer's recommendations and AS 1288. Allow for thermal expansion of glass, the metal framing and spandrels.

**305 Preparation for Sealants**

Joint preparation sealants: clean joint surfaces immediately before installation of sealant or caulking compound. Remove dirt, insecure coatings, moisture and other substances which could interfere with bond of sealant or

caulking compound. Etch concrete and masonry joint surfaces as recommended by sealant manufacturer. Roughen vitreous and glazed joint surfaces if recommended by sealant manufacturer.
Prime or seal joint surfaces where indicated, and where recommended by sealant manufacturer. Do not allow primer/sealer to spill or migrate on to adjoining surfaces.

**306 Installation of Sealants**

A. Install bond breaker tape where required by manufacturer's recommendations to ensure that elastomeric sealants will perform properly.
B. Employ only proven installation techniques, which will ensure that sealants are deposited in uniform continuous ribbons without gaps or air pockets, with complete "wetting" of joint bond surfaces equally on opposite sides. Except as otherwise indicated, fill sealant rabbet to a slightly concave surface slightly below adjoining surfaces.
C. Install sealant to depths as recommended by sealant manufacturer.
D. Cure sealants and caulking compounds in compliance with manufacturer's instructions and recommendations, to obtain high early bond strength internal cohesive strength and surface durability. Advise project manager of procedures required for cure and protection of joint sealers during construction period, so that they will be without deterioration or damage (other than normal wear and weathering) at time of Practical Completion.
E. Remove excess caulking compound and sealant and leave surfaces neat, smooth and clean, without smears on surrounding work. Tool joints where recommended by manufacturer or where required. Remove cartons and debris from site as the work progresses.

**307 Actuators, Detectors and Control Systems**

Comply with the requirements of the manufacturer and AS 5007.

**308 Commissioning**

Comply with the requirements of AS 5007, regarding electrical installation and commissioning.

**309 Protection**

A. Framing system: protect metal surfaces as necessary during erection. Finish surfaces free from mechanical imperfections such as scratches, scrapes, dents, spots, stains and streaks.
B. Glass: protect glass from breakage immediately upon installation and until Practical Completion. Remove and replace glass and metal panels which are broken, cracked, abraded, chipped or damaged in other ways, before, during or after installation, at no additional cost to proprietor.
C. Be responsible for breakage and damage to installation until Practical Completion.

**310 Cleaning**

A. Remove labels, excess glazing compounds, stains, spots and other foreign matter from glass, frames, hardware and other finished surfaces immediately upon installation of glazing for each light.
B. Debris: remove rubbish and debris resulting from glazing operations, each day.

**311 Completion**

Complete contracted work in accordance with contract documents and written variation orders issued by the project manager.

**END OF SECTION**

http://www.abcb.gov.au/education-events-resources/publications/~/media/Files/Download%20Documents/Publications/Advisory%20Note%20-%20Protection%20of%20Openable%20Windows.pdf

**PART I GENERAL**

**101 Scope**

Design, engineer, supply and install a complete glazed system of windows, doors and screens, including but not limited to:
Material type
Finish type
Openings
Glass types
Glazing methods
Insect screens

**102 Related Work**

Co-ordinate and co-operate with the tradesmen preparing walls and frames to accept windows, including casting in of anchors.

**103 Quality Assurance**

Manufacturer qualifications: not less than 10 years continuous experience in the manufacture of the product types specified.
Installer qualifications: installer is to have not less than 5 years continuous experience in the erection of specified material.

**104 References**

Comply with applicable portions of the following Australian Standards:

| | | |
|---|---|---|
| AS/NZS 1170 | Structural design actions. | |
| | 1170.0 2002 | General principles. *Plus 5 Amdts, 2003 – 2011.* |
| | 1170.1 2002 | Permanent, imposed and other actions. *Plus 2 Amdts, 2005 – 2009.* |
| | 1170.2 2011 | Wind actions. |
| | 1170.3 2003 | Snow and ice actions. *Plus 1 Amdt, 2007.* |
| | 1170.4 2007 | Earthquake actions in Australia. |
| | *There are several Supplements and Amdts, 2002 – 2011.* | |
| AS 1231 2000 | Aluminium and aluminium alloys – Anodic oxidation coatings. | |
| AS 1288 2006 | Glass in buildings - Selection and installation. *Plus 1 Supplement, 2006 and 2 Amdts, 2008 - 2011.* | |
| AS 2047 1999 | Windows in buildings - Selection and installation. *Plus 2 Amdts, 2001.* | |
| AS 3715 2002 | Metal finishing - Thermoset powder coating for architectural applications of aluminium and aluminium alloys. | |
| AS 4145.2 2008 | Locksets and hardware for doors and windows – Mechanical locksets for doors and windows in buildings. *Plus 2 Amdts, 2009.* | |
| HB 125 2007 | The glass and glazing handbook. | |

Comply with relevant authority's requirement for fire-rated installation.

**105 Submissions Required Prior to Fabrication**

A. Complete system description including the following information:
Names of manufacturers of products.
Names, addresses and telephone numbers of local representatives for products.
Types, model numbers and names of products, and indication whether products are "off the shelf" or custom fabricated. Include specific information on finishes - thicknesses, patented process name, process description and test data.
Detailed information on products manufactured specifically for this project.
Detailed system description including standard details and manufacturer's literature; and large-scale details of specially fabricated products.

B. Statement that the proposed system meet(s) the regulatory requirements, thermal, aesthetic and waterproofing criteria and wind loading, construction, glazing and warranty requirements specified; noting in detail exceptions.

C. Shop Drawings: refer DOCUMENT 00800 SUPPLEMENTARY CONDITIONS OF CONTRACT, clause 27. Provide Shop Drawings showing the following information where appropriate to the items:
Layout (sectional plan and elevation of complete assembly).
Full size section of members.
Methods of assembly, type and location of exposed screws.
Methods of glazing.
Methods of installation, including fixings, anchorage, caulking, flashings.
Provision for expansion (thermal).
Junctions and trim to adjoining surfaces.
Fittings and accessories.

D. Engineer's calculations on wind loading.

E. Sealants: submit manufacturer's product specifications, handling, installation/curing instructions, and performance tested data sheets for each elastomeric product required. Submit certificate test reports for elastomeric sealants on aged performance as specified, including hardness, stain resistance, adhesion, cohesion or tensile strength, elongation, low-temperature flexibility, compression set, modulus of elasticity, water absorption, and resistance (ageing, weight loss, deterioration) and exposure to heat, ozone and ultraviolet light.

**106 Delivery, Handling and Storage**

Handle materials with care. Do not store on site. Install directly in place. Store sealants as instructed by manufacturer.

**107 Warranty**

Provide to the proprietor a warranty, counter-signed by the installer, on the whole of the installation, which states that work will remain intact, waterproof and fully operational for the period of not less than years after date of Practical Completion.

## PART II MATERIALS

**201 Acceptable Manufacturers**

The following manufacturers of window frames are acceptable:

**202 Materials**

Window frames: extruded aluminium components manufactured from aluminium alloy 6063, temper T5 or T6.
Match components detailed on drawings or an alternative approved in writing by the project manager.
Glass: refer clause 206.
Insect screens:

**203 Structural Criteria**

A. Adopt Terrain Category:
Refer AS/NZS 1170.

B. Wind loading: design:
1. Glazing and frame assemblies to suit the static and dynamic wind forces as indicated on the tables in the AS/NZS 1170.
2. Structural members of glazed units of such strength that when tested at the specified design wind values they do not deflect by an amount greater than span/240 and do not cause permanent deflection.
3. Fix members so that the above loading is generated in the members without stress causing failure or movement becoming evident at any joint.

C. Movement: permit free and noiseless movement of the components due to thermal effects, structural effect, wind pressure, effect of dead loads, without strain to glass, without buckling of components and without excessive stress to members or assemblies.

D. Contact with other materials: coat metal surfaces in contact with mortar, concrete, plaster, masonry, wet-application of fire-proofing and absorbent materials with an anti-galvanic, moisture barrier material. Isolate, with inert material, dissimilar metals for the prevention of electrolytic action and corrosion.

E. Distortion: design the glazed assembly to minimise visual distortion of reflected images.

**204 Detail Design Provisions**

A. General: the project manager's drawings are to be considered essentially schematic except for profiles of exposed surfaces and panel arrangement where indicated. If, in the opinion of the builder a change of profile is required in order to meet the specification, arrange through the project manager for a review of the condition. Design the assembly, reinforcing and anchorage to suit each specified condition in an acceptable manner complying with the requirements specified herein.

B. Tolerances: design frames to accommodate building tolerances, and when completed, within the following tolerances:
1. Deviation from plumb, level or dimensioned angle within 3mm per 3.5m of length of member, or 6mm in total run in line.
2. Deviation from theoretical position on plan or elevation, including deviation from plumb, level or dimensioned angle not to exceed 9mm total at location.
3. Change in deviation not to exceed 3mm for 3.5m run in direction.

**205 Finish**

Anodising or Polyester Powder Coat.
Anodising:
Metal of windows, doors and shop fronts anodised to selected colour.
Pre-treat and apply anodising by applicators approved by the project manager.
Minimum coating thickness of 25 microns subjected to random testing after installation. Remove and replace non-conforming material.
Comply with requirements of AS 1231.
Polyester powder coat:

Polyester powdercoated, to colour approved by the project manager and by the manufacturer of the powder material, to metal of windows, doors and shop fronts.
Perform pre-treatment and application of powder coating by applicators approved by the project manager and by the manufacturer of the powder material.
Minimum coating thickness of 50 microns subjected to random testing after installation. non-conforming material will be removed and made good by the builder.
Comply with requirements of AS 3715.

**206 Glass**

A. Glass materials for external use:
B. Glass material for internal use:
C. Other glass for:
D. Calculations: calculate glass sizes and thicknesses in accordance with Standards, and fixing devices and connections to structure in accordance with engineer's computations where applicable.
E. Double glazing:

**207 Sealants and Accessory Materials**

A. Provide non-structural external weatherproofing sealants of low modulus neutral curing silicone rubber compounds by approved manufacturer.
B. Generally comply with AS 1288, Part 2, Section 6 or 8. Supply spacer gaskets, glazing tapes and setting blocks compatible with sealants, which do not contribute to sealant colour change or affect the sealants adhesion to substrates when exposed to ultraviolet light.
Prior to application, samples of materials receiving the silicone, including elastomeric sealants are to be evaluated by the silicone sealant manufacturer for compatibility and primer selection. Clearly identify the submitted materials as to manufacturer and product number.
Silicone sealants generally will be clear in colour.
C. Interior sealers: acrylic-emulsion or latex-rubber-modified acrylic emulsion sealant compound, permanently flexible, non-staining and non-bleeding; recommended by manufacturer for protected exterior exposure and general interior exposure.
D. Joint primer/sealer: provide type of joint primer/sealer as recommended by sealant manufacturer to suit each surface.
E. Bond breaker tape: polyethylene tape or other plastic as recommended by sealant manufacturer to be applied to sealant-contact surfaces where bond to substrate or joint filler is to be avoided for proper performance of sealant. Provide self-adhesive tape where applicable.
F. Sealant backer rod: compressible rod stock of polyethylene foam, polyethylene jacketed polyurethane foam, butyl rubber foam, neoprene foam or other flexible permanent, durable non-absorbent material as recommended by sealant manufacturer for compatibility with sealant.
G. Glazing tape: polyisobutylene tape of type, thickness and width as recommended by glass manufacturer and project manager.
H. Exposed screws: countersunk type, anodised aluminium or non-magnetic stainless steel evenly and neatly located in an approved manner. Exposed fasteners: finished to match aluminium.

**208 Fabrication**

Comply with AS 2047.
Framing system: fabricate from extrusions to profiles shown on approved Shop Drawings.
Form junctions so that no fixings, such as pins, screws, pressure indentations and the like are visible on exposed faces. Show on Shop Drawings fixings which will be exposed. Cut edges, drill holes, rivet joints and clean flat sheets, neat, free from burrs and indentations. Remove sharp edges without excessive deformation.
Fit mitred joints accurately to a fine hairline.
Pre-assemble and match mark before delivery.

**209 Dissimilar Metals**

In moist environments, prevent totally contact between dissimilar metals (any metals).
This instruction takes priority over any drawing, detail or instruction and will prevent cathodic reaction between the metals.
Refer this instruction to the structural engineer.

## PART III EXECUTION

**301 Examination**

Inspect site conditions before start of work on site, before delivery of materials. Ensure conditions are satisfactory for installation.
Perform rectification required before delivery of materials.
Start of work means total acceptance of conditions.

**302 Preparation**

Ensure tasks and activities comply with the Act, Regulation, Code of Practice or Australian Standards, as relevant.
Prepare surfaces affected by the installation in accordance with material manufacturer's instructions.

**303 Frame Anchorage**

Fabricator is required to supply the anchorage devices to the builder for building in by others and check that devices are located as required to suit the requirements of window frame fabrication for positive and permanent fixing.

Insulation: isolate dissimilar metals at interfaces with bitumen based or nylon shim materials to prevent galvanic action.

Make good concrete or masonry damaged during the installation of masonry anchors at no cost to the proprietor.

**304 Frame Installation**

Comply with AS 2047.

**305 Glazing**

Secure glass in accordance with glass manufacturer's recommendations and AS 1288. Allow for thermal expansion of glass, the metal framing and spandrels.

**306 Preparation for Sealants**

Joint preparation sealants: clean joint surfaces immediately before installation of sealant or caulking compound. Remove dirt, insecure coatings, moisture and other substances which could interfere with bond of sealant or caulking compound. Etch concrete and masonry joint surfaces as recommended by sealant manufacturer. Roughen vitreous and glazed joint surfaces if recommended by sealant manufacturer.

Prime or seal joint surfaces where indicated, and where recommended by sealant manufacturer. Do not allow primer/sealer to spill or migrate on to adjoining surfaces.

**307 Installation of Sealants**

A. Install bond breaker tape where required by manufacturer's recommendations to ensure that elastomeric sealants will perform properly.

B. Employ only proven installation techniques, which will ensure that sealants are deposited in uniform continuous ribbons without gaps or air pockets, with complete "wetting" of joint bond surfaces equally on opposite sides. Except as otherwise indicated, fill sealant rabbet to a slightly concave surface slightly below adjoining surfaces.

C. Install sealant to depths as recommended by sealant manufacturer.

D. Cure sealants and caulking compounds in compliance with manufacturer's instructions and recommendations, to obtain high early bond strength internal cohesive strength and surface durability. Advise project manager of procedures required for cure and protection of joint sealers during construction period, so that they will be without deterioration or damage (other than normal wear and weathering) at time of Practical Completion.

E. Remove excess caulking compound and sealant and leave surfaces neat, smooth and clean, without smears on surrounding work. Tool joints where recommended by manufacturer or where required. Remove cartons and debris from site as the work progresses.

**308 Insect Screens**

**309 Protection**

A. Framing system: protect metal surfaces as necessary during erection. Finish surfaces free from mechanical imperfections such as scratches, scrapes, dents, spots, stains and streaks.

B. Glass: protect glass from breakage immediately upon installation and until Practical Completion. Remove and replace glass and metal panels which are broken, cracked, abraded, chipped or damaged in other ways, before, during or after installation, at no additional cost to proprietor.

C. Be responsible for breakage and damage to installation until Practical Completion.

**310 Cleaning**

A. Remove labels, excess glazing compounds, stains, spots and other foreign matter from glass, frames, hardware and other finished surfaces immediately upon installation of glazing for each light.

B. Debris: remove rubbish and debris resulting from glazing operations, each day.

**311 Completion**

Complete contracted work in accordance with contract documents and written variation orders issued by the project manager.

**END OF SECTION**

## PART I GENERAL

**101 Scope**

Supply and install skylights where indicated, including but not limited to:
Installation in metal deck or corrugated iron roofs,
Installation in slate, shingle or tile roofs.
Preparation of openings for skylights.
Flashing and sealing at perimeter

**102 Related Work**

Co-ordinate and co-operate with the following trades:
Roof framework Roof plumbing

**103 Quality Assurance**

Ensure that the chosen contractor is widely experienced in the class of work required by this specification.

**104 References**

Comply with applicable portions of the following Australian Standards:

| | | |
|---|---|---|
| AS/NZS 2179 | Specifications for rainwater goods, accessories and fasteners. | |
| | 2179.1 1994 | Metal shape or sheet rainwater goods, and metal accessories and fasteners. |
| AS/NZS 4200 1994 | Pliable building membranes and underlays. *There are 2 parts and 1 Amdt, 1994.* | |
| AS 4285 2007 | Skylights. | |

Comply with Building Code of Australia and state appendices or codes.

**105 Delivery, Handling and Storage**

Where possible, deliver materials for direct installation, keeping on-site storage of materials to a minimum. Be responsible for loss and damage to materials whether stockpiled or in place.

**106 Warranty**

Provide a warranty to the proprietor that the whole of the roof and roof plumbing system will remain weather-tight and weatherproof, after the installation of skylights for years from the date of Practical Completion.

## PART II MATERIALS

**201 Skylights**

Square, rectangular, pyramid, circular, openable, ventilation type etc.
Model number:
Material:
Finish:
Glazing material:
Other:

**202 Related Materials**

Flashing
Gutters
Other:

## PART III EXECUTION

**301 Examination**

Visit the site, inspect the conditions and compare them with the drawings. Ensure conditions are satisfactory for installation. Arrange for rectification before delivery of materials.
Start of work means total acceptance of conditions.

**302 Terrain Category**

Refer roof material specification.

**303 Preparation**

Ensure that the installed roofing material is intact and will suit the skylights.

**304 Installation**

Ensure tasks and activities comply with the Act, Regulation, Code of Practice or Australian Standards, as relevant.
Comply with instruction of the manufacturer and with the provisions of AS 4285.

**305 Testing**

Comply with tests ordered by the project manager.

**306 Clean Up**

On completion, clean away debris. Remove plant and equipment, leaving the whole in a condition satisfactory to the project manager.

**307 Completion**

Complete contracted work in accordance with contract documents and written variation orders issued by the project manager.

**END OF SECTION**

## PART I GENERAL

### 101 Scope

The work of this section includes design, engineering, manufacture and installation of metal frames including metal finishing and glazing of metal-framed skylights.

### 102 Related Work

Co-ordinate and co-operate with the following trades:

| | |
|---|---|
| Structural steel | Metalwork |
| Roof construction | |

### 103 Quality Assurance

A. Manufacturer qualifications: not less than 10 years continuous experience in the manufacture of the product types specified.

B. Installer qualifications: installer is not to have less than 5years continuous experience in the erection of specified material.

C. Testing agency qualifications generally:
Perform tests, where required by a NATA laboratory or by CSIRO Division of Building Research. Tests performed by recognised overseas testing laboratories certified by the American Society of Testing Materials (ASTM) may be submitted and will be considered in evaluation of the products and systems proposed, but such tests will not relieve the builder from responsibility of providing tests from an approved testing agency.

D. Take responsibility for providing other related trades with complete information on the materials and equipment to be installed, the critical dimensions of such work, and other data affecting the work of the trades identified.
Ensure sub-contractors and vendors co-operate in the proper sequence and fit of the work.

E. Review sub-contractor's Shop Drawings and obtain project manager's approval in writing. Refer DOCUMENT 00800, SUPPLEMENTARY CONDITIONS OF CONTRACT, clause 27.

F. Take care with tolerances and dimensional verifications.

### 104 References

Comply with applicable portions of the following Australian Standards:

| | |
|---|---|
| AS/NZS 1170 | Structural design actions.<br>*There are 5 parts, several Supplements and Amdts, 2002 – 2011.* |
| AS 1288 2006 | Glass in buildings - Selection and installation.<br>*Plus 1 Supplement, 2006 and 2 Amdts, 2008 - 2011.* |
| AS/NZS 1664 | Aluminium structures.<br>*There are 2 parts, 2 Supplements and 4 Amdts, 1997-1999.* |
| AS 2047 1999 | Windows in buildings - Selection and installation. *Plus 2 Amdts, 2001.* |
| AS/NZS 2208 1996 | Safety glazing materials in buildings. *Plus 1 Amdt, 1999.* |
| AS 4285 2007 | Skylights. |

### 105 System Description

A. Design requirements:
1. Extruded aluminium structural members with appropriate means of attaching external glass and capping.
2. Integral guttering system within the framing members for positive drainage of condensation.
3. Structural silicone.

B. Performance criteria:
1. Structural members of sufficient strength to meet potential dead and live loads.
2. Deflection of glass or other panel is not to reduce the bite or grip of framing member by more than 25% and is not to impair the joint seals.
3. Limit the water penetration of the skylights to zero when the system is tested using a differential static pressure of 20% of the inward acting design wind load pressure.
4. Thermal movement. Provide for expansion and contraction of component materials as will be caused by a surface temperature range of -5ºC to 45ºC without causing buckling, stress of glass, failure of seals or other detrimental effects.

### 106 Submission Required Prior to Fabrication

A. Complete system description including the following information:
1. Names of manufacturers of products.
2. Names, addresses and telephone numbers of local representatives for products.
3. Types, model numbers and names of products, and indication whether products are "off the shelf" or custom fabricated. Include specific information on finishes - thicknesses, patented process name, process description and test data.
4. Detailed information on products manufactured specifically for this project.
5. Detailed system description including standard details and manufacturer's literature; and large-scale details or specially fabricated products.

B. Statement that the proposed system meet(s) the regulatory requirements, thermal, aesthetic and waterproofing criteria and wind loading construction, glazing and warranty requirements specified; noting in detail exceptions.

C. Shop drawings: refer DOCUMENT 00800, clause 27. Provide Shop Drawings showing the following information where appropriate to the items:
   1. Layout (sectional plan and elevation of complete assembly)
   2. Full size section of members.
   3. Methods of assembly, type and location of exposed screws.
   4. Methods of installation, including fixings, anchorage, caulking, flashings.
   5. Provision for expansion (thermal).
   6. Junctions and trim to adjoining surfaces.
   7. Fittings and accessories.

D. Engineer's calculations on wind loading.

E. Sealants: submit manufacturer's product specifications, handling, installation/curing instructions and performance tested data sheets for each elastomeric product required. Submit certificate test reports for elastomeric sealants on aged performance as specified, including hardness, stain resistance, adhesion, cohesion or tensile strength, elongation, low-temperature flexibility, compression set, modulus of elasticity, water absorption and resistance (ageing, weight loss, deterioration) and heat and exposure to ozone and ultraviolet light.

**107 Deliver, Handling and Storage**

Handle materials with care. Do not store on site. Install directly in place. Store sealants as instructed by manufacturer.

**108 Warranty**

A. Submit manufacturer's warranty certificate that the skylight installation is provided and installed in accordance with contract documents.

B. Certify that the installation is free from defects in design, material and construction and that the installation will be free of water penetration for a period of years from the date of Practical Completion.

C. Submit glass, translucent and other panels warranty stating that material will retain structural integrity, will not delaminate, will not cause seal failure or other defects for years from date of Practical Completion.

D. Certify that sealant material is provided and installed in accordance with sealant manufacturer's instructions and will perform as warranted by the sealant manufacturer for years from the date of Practical Completion.

## PART II MATERIALS

**201 Acceptable Manufacturers**

**202 Materials**

A. Framework
   Principal support members.
   Extruded aluminium, 3mm wall thickness.
   Alloy 6063 - T5, 6063 - T6 or 6061 - T6.
   Sizes and shapes to suit design drawings.
   Snap on covers and other trim, 1.5mm minimum.

B. Glazing strips, non-adhesive, heat-cured silicone rubber, Type 1.

C. Setting blocks as for glazing strips, Type 11.

D. Fasteners, type 316 or 304, stainless steel screws.

E. Flashings, stainless steel sheet or zinc sheet.

F. Finish:
   Anodising
   Polyester powdercoat
   Acrylic
   Fluoroset FP

G. Translucent panels: float, laminated
   Polycarbonate

H. Opaque panels
   Ceramic frit
   Treated translucent
   Plywood

I. Sealants
   1. Structural flush glazed joints: high performance silicone sealant.
   2. Non-structural flush glazed joints: silicone rubber.
   3. Backer rod: polyethylene rod.
   4. Expansion joints: neoprene sheet or strip.

**203 Fabrication**

A. Construct skylights using materials recommended by the manufacturer and in situations in accordance with manufacturer's instructions.
B. Prepare materials and fabrications in accordance with measurements taken on site where possible.
   1. Where not possible, arrange for on site fabrication.
C. Do as much fabrication as possible in the shop prior to delivery to site. Mark and disassemble before delivery to site.
D. Stainless steel fasteners are required.
E. Use snap-on cappings to conceal fasteners where possible.
F. Use setting blocks to support glass and provide edge clearance as follows:
   1. Not less than 150mm from edge of glass for support of glass.
   2. Glass bite: not less than 12mm or more than 15mm on side of a glass panel.
   3. Maintain 6mm edge clearance between glass and adjacent metal framework.
   4. Separate glass faces from metal frame surfaces with spacer blocks.
G. Locate weep holes in curb for condensation drainage to exterior of skylight, at each rafter connection.

## PART III EXECUTION

**301 Examination**

Prior to installation of the skylight system, arrange for a representative(s) of skylight manufacturer to examine the structure and substrate to determine that they are properly prepared, sized and ready to receive the skylight work included herein.

**302 Preparation**

Ensure tasks and activities comply with the Act, Regulation, Code of Practice or Australian Standards, as relevant.
Apply a protective coating of asphaltic paint to contact between aluminium and dissimilar metals for the prevention of electrolytic action and corrosion.

**303 Installation**

A. Install skylight frame, glass and accessory items as needed in accordance with manufacturer's instructions.
B. Install skylight system under the direction of the skylight manufacturer's own experienced mechanics.
C. Erect system plumb and true, in proper alignment and relation to established lines and grades as shown on approved Shop Drawings.
D. Anchor skylight to structure in strict accordance with approved Shop Drawings.
E. Use high performance silicone sealants to seal horizontal joints between glass panels and silicone sealant to wet seal joints between snap-on cap retainers and glass.
F. Apply sealing materials in strict accordance with sealant manufacturer's instructions. Before application remove mortar, dirt, dust, moisture and other foreign matter from surfaces it will contact. Mask adjoining surfaces to maintain a clean and neat appearance. Tool sealing compounds to fill the join and provide a smooth finish.

**304 Tolerances**

All parts of the work, when completed, are to be within the following tolerances:

A. Maximum variation from plane or location shown on approved Shop Drawings: 3mm per 3 metres of length or 12mm in total length.
B. Maximum offset from true alignment between two members abutting end-to-end, edge-to-edge inline or separated by less than 75mm, 1mm.

**305 Field Quality Control**

Sealant Adhesion: after sealant is fully cured (14 to 21 days) perform sealant adhesion test in strict accordance with sealant manufacturer's prescribed procedure.

**306 Cleaning**

Install skylight frame and associated metal to avoid soiling or smudging finish.
Clean glass at time of installation.

**307 Protection**

Protect finished installation until Practical Completion.

**308 Completion**

Complete contracted work in accordance with contract documents and written variation orders issued by the project manager.

**END OF SECTION**

http://www.abcb.gov.au/education-events-resources/publications/~/media/Files/Download%20Documents/Publications/Advisory%20Note%20-%20Protection%20of%20Openable%20Windows.pdf

## PART I GENERAL

### 101 Scope

Design, fabricate, supply and install window security items including but not limited to:
Wall mounted grilles for ventilation and other purposes

| | |
|---|---|
| External grilles | Hinged screens |
| Internal grilles | Sliding screens |
| External roller window screen | Remote controlled operation |
| Locking devices | Fire resistance or fire proofing |
| Microwave detection | |

### 102 Related Work

Co-ordinate and co-operate with the following trades:

| | |
|---|---|
| Floor construction | Metalwork |
| Wall construction | Metal Windows and Glazing |
| Ceiling construction | Metal Finishing |
| Concrete | Painting |
| Carpentry | |

### 103 Quality Assurance

Work of this trade section is to be performed by experienced craftsmen familiar with the quality required in this class of work.
Where 5 or more items of a similar product are required, construct a prototype, full size. Finish the prototype in every respect. When approved by the project manager, this sample remains part of the work and becomes the standard for the remaining work.

### 104 References

Comply with applicable portions of the following Australian Standards:

| | |
|---|---|
| AS/NZS 1554 | Structural steel welding. *There are 7 parts, 1994 – 2012.* |
| AS 1627 | Metal finishing - Preparation and pre-treatment of surfaces.<br>1627.6 2003 Chemical conversion treatment of metals.<br>*There are 6 other parts, 1997 – 2005.* |
| AS 1796 2001 | Certification of welders and welding supervisors. *Plus 1 Amdt, 2002.* |
| AS 3715 2002 | Metal finishing - Thermoset powder coating for architectural applications of aluminium and aluminium alloys. |
| AS 4100 1998 | Steel structures *Plus 1 Supplement, 1999, 1 Amdt 2012.* |
| AS/NZS 4680 2006 | Hot-dip galvanised (zinc) coatings on fabricated ferrous articles. |

Comply with requirements of statutory and local authorities.

### 105 Shop Drawings

Comply with DOCUMENT 00800, clause 27.
Provide shop drawings for major items supplied hereunder.

A. Contract drawings and details provided are indicative as to general and minimum requirements, and do not show conditions.
B. Develop details not shown and in conformity with the indicative details shown.
C. Take and confirm dimensions on site, before preparing shop drawings where possible.
D. Submit detailed shop drawings for fabrication and installation of major metalwork. Show plans, elevations and detailed sections; indicate materials, finishes, types of joinery, fasteners, anchorages and accessory items. Provide setting diagrams and full-scale templates of blocking, anchorages, sleeves and bolts installed by others.

### 106 Samples

A. Sample welds: if requested, provide samples of weld types, including samples of railings joined at right angles and at typical acute angles, welded and ground smooth, for approval. If not acceptable, provide additional samples until approved. When approved, samples are to establish quality of similar work of this trade section.
B. Check on delivery: request project manager to check materials on delivery to site for quality, and he will reject materials not meeting the requirements of this specification or equal to approved samples. Rejected materials are to be returned to the fabricator at the fabricator's expense.
C. Finish: provide samples of specified finishes when requested.

## PART II MATERIALS

### 201 Manufacturers

**202 Materials**

| Item: | Manufacturer | Material | Model No | Size | Finish |
|---|---|---|---|---|---|
| | | | | | |
| | | | | | |
| | | | | | |

**203 Welding Steel**

General: details of joints, the techniques of welding employed, the appearance and quality of welds made and the methods used to correct defective work; conform to requirements of AS/NZS 1554.
Welds exposed to view: grind smooth to project manager's approval.
Concealed welds: grind smooth before galvanising.
Tack or skip welding: at regular intervals, very neat; not permitted if material is to be hot-dip galvanised.
Remove weld spatter.
Certification: Welds are to be made only by welders who have previously been qualified by tests as prescribed in AS 1796 for the type of work required.
Tack welding or skip welding will NOT be permitted where items are to be galvanised. Weld continuously form joints and connections to exclude water and to permit draining during galvanising.

**204 Fabrication**

Visit site and accurately measure openings etc. before fabrication.
Before delivery to site, pre-assemble where possible all items to ensure proper fit and dimension of each item. Disassemble and pack carefully for shipping to the site. On delivery and unloading, inspect for damage and arrange immediate replacement if necessary.

**205 Connection Design**

General: design fabricated items so that possible work is done before delivery. Fully protect for shipment. Take possible care to prevent damage.

A. Welding external items: conform to the recommendations of AS/NZS 1554, noting particularly the design criteria.
B. Flanges: concealed where possible. Sleeve connecting railings inside railing sections and secure with flush or set screws. Except where access is impossible, connection screws and bolts are to be on the underside of joints.
C. Fasteners on the top of railing sections will not be permitted.
D. Shop connections for steel fabrications are to be welded, and field connections bolted.
E. Provide smooth finishes to exposed surfaces with sharp well-defined lines and arrises. Machined joints are to be milled to a close fit. Design necessary lugs, brackets and similar items so that work can be assembled and installed in a neat, substantial manner.
F. Provide ample strength and stiffness by using appropriate metal thickness of assembly and supports.
G. Provide holes and connections as required to accommodate the work of other trades and for site assembly of metalwork. Drill or punch and ream in the shop.

**206 Miscellaneous**

Fasteners: provide required bolts, screws, inserts, fasteners, templates and other accessories required for a complete installation.
Co-ordinate with other trades as to the proper fastening systems suitable for the substrates to which the item is to be secured. Refer to project manager if in doubt. Fasten galvanised items with galvanised fasteners.

## PART III EXECUTION

**301 Examination**

Inspect site conditions before fabrication, where possible, and before delivery of materials. Ensure conditions are satisfactory for installation. Arrange for rectification required.
Start of work means total acceptance of relevant conditions.

**302 Preparation**

A. Ensure tasks and activities comply with the Act, Regulation, Code of Practice or Australian Standards, as relevant.
B. Field measurements: do not delay job progress. Allow for adjustments and fitting of the work in the field where taking of measurements might cause delay.
C. Co-ordination with work of others: furnish to each relevant trade foreman anchorages and setting drawings, diagrams, templates and instructions for installation of items having integral anchors which are to be embedded in concrete or masonry construction. Co-ordinate delivery of such items to the project site.

**303 Inspection and Reinstatement**

A. Check fabrications as they are unloaded at the project site for evidence of physical damage. Damaged fabrications are to be treated as follows:

1. Damage through galvanising: perform immediate inorganic zinc silicate paint or cold-galvanising repair. Do not install until reinstated.
2. Architectural metalwork: returned to shop for repair or replacement.

B. Verify anchors, bolts and other required anchorage items for proper size and accurate location prior to erection.

**304 Installation**

A. Anchorage: except for anchorages furnished herein but placed by other trades, set and secure necessary anchorages, including concrete and masonry inserts, bolts, wood screws and other connectors as needed. Perform cutting, drilling and fitting as needed, locating anchorages and holes to ensure proper positioning of completed work.

B. Fit: during installation and assembly, form tight joints with exposed connections accurately fitted, and reveals uniform. Finish work accurately, plumb, level, square and true in reference to adjacent construction. Make tolerances conform to Australian Standards.

C. Finish: do not cut or abrade shop finishes which cannot be completely restored in the field.
1. The use of gas-cutting torch in the field for correcting fabrication errors will not be permitted under conditions. Fabrications may be cut shorter with power hacksaws on site.
2. Isolate dissimilar metals likely to be subject to moisture with inert materials, not visible on completion of installation.

**305 Field Quality Control**

Where considered necessary by the project manager, arrange for the manufacturer of products to instruct installers regarding correct installation and check completed installations.

**306 Protection**

Cover work: immediately following installation, wrap or cover architectural metalwork to avoid wear and tear of finish during subsequent construction.

**307 Cleaning**

Clean materials installed to the satisfaction of the project manager. Remove temporary protective coatings.

**308 Completion**

Complete contracted work in accordance with contract documents and written variation orders issued by the project manager.

**END OF SECTION**

## PART I GENERAL

### 101 Scope

Supply and install door hardware including but not limited to:
Wall mounted grilles for ventilation and other purposes.
Hinges.
Pivots.
Latches.
Locks.
Door holders.
Push plates.

### 102 Related Work

Co-ordinate and co-operate with the following trades:

| | |
|---|---|
| Floor construction | Painting |
| Wall construction | Doors and door frames |
| Ceiling construction | Fire-rated door and frames |
| Concrete | Roller shutter doors |
| Carpentry | Folding doors and grilles |
| Metal finishing | Automatic sliding door assemblies |

### 103 Quality Assurance

Work of this trade section is to be performed by experienced craftsmen familiar with the quality required in this class of work.
Where 5 or more items of a similar product are required, construct a prototype, full size. Finish the prototype in every respect. When approved by the project manager, this sample remains part of the work and becomes the standard for the remaining work.

### 104 References

Comply with applicable portions of the following Australian Standards:

| | | |
|---|---|---|
| AS 1428 | Design for access and mobility. | |
| | 1428.1 2009 | General requirements for access – New building work. |
| | *There are 5 other parts. 1992 – 2010.* | |
| AS 1909 1984 | (Obsolescent) Installation of timber doorsets. | |
| AS 2688 1984 | (Obsolescent) Timber doors. | |
| AS 2689 1984 | (Obsolescent) Timber doorsets. | |
| AS 4145 | Locksets. | |
| | 4145.2 2008 | Mechanical locksets for doors in buildings. |
| | *There are 3 other parts, 2001 - 2008 plus 2 Amdts 2009.* | |
| AS 4178 1994 | Electromagnetic door holders. | |

Comply with requirements of statutory and local authorities.

### 105 Delivery, Handling and Storage

Deliver items to site in original packaging, each clearly labelled for the relevant door by door number.

### 106 Warranty

Provide to the proprietor a warranty covering faulty materials and installation for years from date of Practical Completion.

## PART II MATERIALS

### 201 Manufacturers

### 202 Hardware Items

Master key systems: refer schedule provided by manufacturer.
Finish:
Door stops:

### 203 Miscellaneous

Fasteners: provide required bolts, screws, inserts, fasteners, templates and other accessories required for a complete installation.
Co-ordinate with other trades as to the proper fastening systems suitable for the substrates to which the item is to be secured. Refer to project manager if in doubt.

## PART III EXECUTION

**301 Examination**

Examine the materials to which door hardware is to be fixed.
Ensure conditions are satisfactory for installation.
Start of work means total acceptance of conditions.

**302 Preparation**

Remove hardware from surfaces to be painted. Replace when paint is dry.

**303 Installation**

Comply throughout with the written instructions of manufacturer.

**304 Keys**

Supply duplicate labelled keys for each lock. Provide plastic tags for each key.
Arrange with project manager for location of a key cupboard.
Fit cupboard with hooks for each key with room names or numbers.
Install cupboard where instructed.

**305 Testing**

Check each key in relevant lock for satisfactory operation. Replace defective keys or locks.
Clean the materials installed.
Remove construction locks.

**306 Co-ordination**

Before finalising hardware order, review with security sub-contractor work related to reed switches, electric locks/strikes etc. Generally such items will be supplied by the security contractors and fitted to doors and frame by the builder.

**307 Schedule**

See Schedule of Door Furniture and Hardware at end of this document.

**END OF DOCUMENT**

## PART I GENERAL

### 101 Scope

Supply and install a complete system of glass, glazing and sealants including but not limited to:
Glass, clear float
spandrel
translucent patterned
wire reinforced
Glass, laminated
two or more laminations
inter-layer
Glass, toughened and unframed glass assemblies
Glass, tinted, heat reflecting, mirrored
Glass, sloping
Glazing plastics, polycarbonate, etc.
Glazing bars
Glazing systems - structural glass
Glazing beads, strips
Sealants and related materials
Film applied to glass surface

### 102 Related Work

Co-ordinate and co-operate with the following trades:
Concrete
Masonry
Structural steel
Roof flashings, etc.
Electrical
Security
Fireproofing and fire services
Timber windows and frames

### 103 Quality Assurance

A. Manufacturer qualifications: not less than ten (10) years continuous experience in the manufacture of the product types specified.
B. Installer qualifications: installer is to have not less than five (5) years continuous experience in the erection of specified material.
C. Testing agency qualifications generally: Perform tests, where required, by a NATA Laboratory or by CSIRO Division of Building Research. Tests performed by recognised overseas testing laboratories certified by the American Society of Testing Materials (ASTM) may be submitted and will be considered in evaluation of the products and systems proposed, but such tests will not relieve the builder from responsibility for providing tests from an approved testing agency.
D. Take responsibility for providing the trades of such Sections with complete information on the materials and equipment to be installed, the critical dimensions of such work, and other data affecting the work of the trades identified.
Ensure subcontractors and vendors co-operate in the proper sequence and fit of the work.
E. Review subcontractor's shop drawings and obtain project manager's approval in writing. Refer DOCUMENT 00800, clause 27.
F. Take care with tolerances and dimensional verifications.

### 104 References

Comply with applicable portions of the following Australian Standards:

| | | |
|---|---|---|
| AS/NZS 1170 | Structural design actions. | |
| | 1170.0 2002 | General principles. *Plus 5 Amdts, 2003 – 2011.* |
| | 1170.1 2002 | Permanent, imposed and other actions. *Plus 2 Amdts, 2005 – 2009.* |
| | 1170.2 2011 | Wind actions. |
| | *There are 2 other parts, several Supplements and Amdts, 2002 – 2011.* | |
| AS 1288 2006 | Glass in buildings - Selection and installation. *Plus 1 Supplement, 2006 and 2 Amdts, 2008 - 2011.* | |
| AS/NZS 2208 1996 | Safety glazing materials in buildings. *Plus 1 Amdt, 1999.* | |
| AS/NZS 2343 1997 | Bullet-resistant panels and elements. | |
| AS 4145.2 2008 | Locksets and hardware for doors and windows – Mechanical locksets for doors and windows in buildings. *Plus 1 Amdt, 2009.* | |
| AS 4666 2012 | Insulating glass units | |
| HB 125 2007 | The glass and glazing handbook. | |

Comply with relevant authority's requirement for fire-rated installation.

**105 Submissions Required Prior to Purchase and Fabrication**

A. Complete system description including the following information:
Names of manufacturers of products.
Names, addresses and telephone numbers of local representatives for products.
Types, model numbers and names of products, and indication whether products are "off the shelf" or custom fabricated. Include specific information on finishes - thicknesses, patented process name, process description and test data.
Detailed information on products manufactured specifically for this project. Detailed system description including standard details and manufacturer's literature; and large-scale details of specially fabricated products.

B. Statement that the proposed system(s) meet(s) the regulatory requirements, thermal, aesthetic and waterproofing criteria and wind loading, construction, glazing and warranty requirements specified; noting in detail exceptions.

C. Shop Drawings: pursuant to DOCUMENT 00800, clause 27 and the provisions of this document, provide the shop drawings showing the following information where appropriate to the items:
1. Layout (sectional plan and elevation of complete assembly).
2. Full size section of members.
3. Methods of assembly.
4. Methods of glazing.
5. Methods of installation, including fixings, anchorage, caulking, flashings.
6. Provision for expansion (thermal).
7. Junctions and trim to adjoining surfaces.
8. Fittings and accessories.

D. Engineer's calculations on wind loading.

E. Sealants: submit manufacturer's product specifications, handling, installation/curing instructions, and performance tested data sheets for each elastomeric product required. Submit certificate test reports for elastomeric sealants on aged performance as specified, including hardness, stain resistance, adhesion, cohesion or tensile strength, elongation, low-temperature flexibility, compression set, modulus of elasticity, water absorption, and resistance (ageing, weight loss, deterioration) and heat and exposure to ozone and ultraviolet light.

**106 Delivery, Handling and Storage**

Handle materials with care. Do not store on site. Install directly in place. Store sealants as instructed by manufacturer.

**107 Warranty**

In addition to the warranty requirements of the General Conditions of Contract, provide the following:

A. Warranty: provide glass manufacturer's written warranty, agreeing to, within specified warranty period, furnish freight paid to project site, replacement units for glass units which have defective hermetic seals (excluding that due to glass breakage), defined to include intrusion of moisture or dirt, internal condensation at temperatures above -2°C, deterioration of internal glass coatings, and other visual evidence of seal failure or performance failure; provided manufacturer's instructions for handling, installation, protection and maintenance have been adhered to during warranty period.

B. Warranty period is years after date of installation and not less than years after date of Practical Completion.

## PART II MATERIALS

**201 Acceptable Manufacturers**

The following manufacturers are acceptable for this project:
Glass, float:
Other:
Glass, laminated:
Glass, toughened:
Glass, tinted, heat reflecting, mirrors:
Glazing plastics: polycarbonate:
Glazing bars:
Sealants:

**202 Structural Criteria**

A. Adopt terrain category:
Refer AS/NZS 1170.

B. Wind loading: design glazing and frame assemblies to suit the static and dynamic wind forces as indicated on the tables in the AS/NZS 1170. Structural members of glazed units: of such strength that they will not deflect by an amount greater than span/240 without causing permanent deflection when tested at the specified design wind values. Fix members so that the above loading is generated in the members without sufficient stress to cause failure or movement becoming evident at any joint.

C. Distortion: design the glazed assembly and erect to minimise visual distortion of reflected images.

**203 Selection of Glass and Glazing Materials**

Refer to detailed parts and sections of AS 1288.
Part 1 deals with the selection of type and thickness of glass.
Part 3 with unframed toughened glass assemblies.
Note particularly:
Part 1, Section 4, Human Impact Safety Requirements, AS/NZS 2208.
Part 1, Section 3, Non-Vertical Situations.
Part 2, Glazing techniques. Choose the method directly from the eight sections of this part of the Standard.

**204 Glass Materials - Aesthetic Criteria**

Glass types (Refer drawings for location)

Vision glass:
Clear coating colour:
Reflectance:
% incident light:
Vision glass:
Clear coating colour:
Reflectance:
% incident light:
Spandrel glass:
Colour:
Reflectance:
% incident light:
Roof light glass:
Toughened or laminated:
Reinforced:
Colour:
Reflectance:
Door glass:
Toughened or laminated:
Colour:
Reflectance:
Obscure glass:
Source:
Name:
Patterned glass:
Source:
Name:
Wired glass:
Source:
Name:

**205 Sealants and Accessory Materials**

A. Comply with AS 1288. Refer the appropriate Trade Section, and comply with requirements stated.
B. For timber frames, use linseed oil glazing putty.
C. For metal frames:
1. Non-structural external weatherproofing sealants: low modulus neutral curing silicone rubber compounds of approved manufacture.
2. Generally comply with AS 1288. Spacer gaskets, glazing tapes and setting blocks: compatible with sealants, which do not contribute to sealant colour change or affect the sealants adhesion to substrates when exposed to ultraviolet light.
Evaluate prior to application, samples of materials receiving the silicone, including elastomeric sealants for compatibility and primer selection. Submit materials clearly identified as to manufacturer and product number.
Silicone sealants generally: clear in colour.
3. Interior Sealers: acrylic-emulsion or latex-rubber-modified acrylic-emulsion sealant compound, permanently flexible, non-staining and non-bleeding; recommended by manufacturer for protected exterior exposure and general interior exposure.
4. Joint Primer/Sealer: provide type of joint primer/sealer recommended by sealant manufacturer for joint surfaces to be primed or sealed.
5. Bond Breaker Tape: polyethylene tape or other plastic as recommended by sealant manufacturer to be applied to sealant-contact surfaces where bond to substrate or joint filler is to be avoided for proper performance of sealant. Provide self-adhesive tape where applicable.
6. Sealant Backer Rod: compressible rod stock of polyethylene foam, polyethylene jacketed polyurethane foam, butyl rubber foam, neoprene foam or other permanently flexible, durable non-absorptive material as recommended by sealant manufacturer for compatibility with sealant.
7. Glazing Tape: polyisobutylene tape of type, thickness and width as recommended by glass manufacturer and project manager.
8. Exposed fixings: countersunk type, anodised aluminium or non-magnetic stainless steel evenly and neatly located in an approved manner. Exposed fasteners: finished to match aluminium. Show on shop drawings or discuss with the project manager before fabrication and delivery of any fixings which will be exposed.

**206 Roof Light Framing**

**207 Glazing Bars**

## PART III EXECUTION

**301 Examination**

Inspect site conditions before start of work on site, before delivery of materials. Ensure conditions are satisfactory for installation.
Arrange for rectification required before delivery of materials.
Start of work means total acceptance of conditions.

**302 Preparation**

Ensure tasks and activities comply with the Act, Regulation, Code of Practice or Australian Standards, as relevant.
Prepare surfaces affected by the installation in accordance with material manufacturer's instructions.

**303 Preparation for Sealants**

Joint preparation sealants: clean joint surfaces immediately before installation of sealant or caulking compound. Remove dirt, insecure coatings, moisture and other substances which could interfere with bond of sealant or caulking compound. Etch concrete and masonry joint surfaces as recommended by sealant manufacturer. Roughen vitreous and glazed joint surfaces if recommended by sealant manufacturer and comply with his instructions.
Prime or seal joint surfaces where indicated, and where recommended by sealant manufacturer. Do not allow primer/sealer to spill or migrate on to adjoining surfaces.

**304 Glazing**

Secure glass in accordance with glass manufacturer's recommendations and AS 1288. Allow for thermal expansion of glass, the metal framing and spandrels.

**305 Installation of Sealants**

A. Install bond breaker tape where required by manufacturer's recommendations to ensure that elastomeric sealants will perform properly.
B. Employ proven installation techniques, which will ensure that sealants are deposited in uniform continuous ribbons without gaps or air pockets, with complete "wetting" of joint bond surfaces equally on opposite sides. Except as otherwise indicated, fill sealant rabbet to a slightly concave surface slightly below adjoining surfaces.
C. Install sealant to depths as recommended by sealant manufacturer.
D. Cure sealants and caulking compounds in compliance with manufacturer's instructions and recommendations, to obtain high early bond strength, internal cohesive strength and surface durability. Advise project manager of procedures required for cure and protection of joint sealers during construction period, so that they will be without deterioration or damage (other than normal wear and weathering) at time of Practical Completion.
E. Remove excess caulking compound and sealant and leave surfaces neat, smooth and clean, without smears on surrounding work. Tool joints where recommended by manufacturer or where required. Remove cartons and debris from site as the work progresses.

**306 Field Quality Control**

Arrange for visits to the site by the supplier's approved technical representative of each component. Such visits are to occur at the start of and during the first stages of installations and towards the end of installations. Follow instructions of the technical representatives. Call in the project manager where appropriate for resolution of problems or difficulties.

**307 Protection**

A. Framing system: protect metal surfaces as necessary during erection.
B. Finish surfaces free from mechanical imperfections such as scratches, scrapes, dents, spots, stains and streaks.
C. Glass: protect glass from breakage immediately upon installation until Practical Completion. Remove and replace glass and metal panels which are broken, cracked, abraded, chipped or damaged in other ways, before, during or after installation, at no additional cost to the Proprietor.
D. Be responsible for breakage and damage to installation until Practical Completion.

**308 Cleaning**

A. Remove labels, excess glazing compounds, stains, spots and other foreign matter from glass, frames, hardware and other finished surfaces immediately upon completion of each panel of glazing.
B. Debris: remove rubbish and debris resulting from glazing operations, each day.

**309 Completion**

Complete contracted work in accordance with contract documents and written variation orders issued by the project manager.

**END OF SECTION**

## PART I GENERAL

**101 Scope**

Supply and install glass splashbacks including, but not limited to:
Measure area to be covered
Prepare area to be covered
Clean surface
Apply colour to glass
Ensure adequate fixing of glass.

**102 Related Work**

Co-ordinate and co-operate with the following trades:
Wall framing
Wall finishing – Plasterboard
Manufactured casework
Glazing
Ceramic tile
Electrical

**103 Quality Assurance**

A. Suppliers and installers are required to be widely experienced in the class of work required by this Specification.
B. Evidence of similar work on projects is required, providing names and addresses of work to facilitate inspection and approval of qualifications.
C. Submissions required before ordering materials:
   1. Product data including description of materials proposed and samples of each.
   2. Description of laying and/or installation methods.

**104 References**

Comply with applicable portions of the following Australian Standards:
AS 1288 2006 Glass in buildings - Selection and installation.
*Plus 1 Supplement, 2006 and 2 Amdts, 2008 - 2011.*
Comply with requirements of statutory and local authorities.

**105 Delivery and Handling**

Handle materials with care. Install directly in place. Do not store on site. Store sealants as instructed by manufacturer.

**106 Warranty**

Provide to the proprietor a warranty covering satisfactory performance of the complete installation for years from the date of Practical Completion.

## PART II MATERIALS

**201 Acceptable Manufacturers**

**202 Materials**

Glass: 6mm toughened. Clear or low iron glass. Form cut outs as required for power outlets.
Background: plasterboard or fibre-cement fixed to bricks.
Colour: solid colour, 2 pack polyurethane or other paint system applied by the manufacturer of the splashback. Refer to project manager for selection of colour.
Sealant: neutral curing silicone rubber around entire perimeter of glass panel.
Fibre cement (if used): 4.5 or 6.0mm secured to masonry as recommended by manufacturer.

## PART III EXECUTION

**301 Examination**

Visit the site and inspect conditions.
Compare conditions with the data shown on drawings.
Ensure tasks and activities comply with the Act, Regulation, Code of Practice or Australian Standards, as relevant.
Start of work means total acceptance of conditions.
Measure the areas to be covered with splashback, including cut-outs for power outlets etc. Advise project manager if walls are found to be out of square with each other or if the wall or substrate is not flat (flat means less than 4mm variation in surface).

**302 Wall Surface To Be Covered**

Clean the surface thoroughly.
Ensure a dry surface which will suit silicone rubber and double-sided adhesive tape.

**303 Adjacent Surfaces**

Remove obstructions from adjacent surfaces which might prevent handling of glass into place.
Clean surfaces.
Ensure that painted surface is thoroughly dry and clean.

**304 Secure The Glass**

Apply double-sided tape to back of glass, if used.
Apply a bead of silicone rubber to entire perimeter of glass. Leave no gaps. Press into place and maintain pressure until fully set.

**305 Cleaning**

Clean entire area of glass and adjacent finishes.

**306 Completion**

Complete contracted work in accordance with contract documents and written variation orders issued by the project manager.

**END OF SECTION**

## PART I GENERAL

### 101 Scope

Supply and install mirrors including but not limited to:
Glass mirrors - solid
Glass mirrors - laminated safety glass
Tinted glass mirrors - solid
Tinted glass mirrors - laminated
Solid glass mirrors bonded to backing
Glassless mirrors - acrylic
Proprietary brand sliding glass mirror-faced doors
Clips, flannelette pad fixing system
Face fixing via dome capped screws through mirrors.

### 102 Related Work

Co-ordinate and co-operate with the following trades:

| | |
|---|---|
| Cement render | Hard plaster |
| Plasterboard | Masonry cleaning |
| Particleboard backings | Suspended exposed grid ceilings |

### 103 Quality Assurance

A. Manufacturer's qualifications: not less than 10 years continuous experience in the manufacture of the product types specified.
B. Installer qualifications: not less than 5 years continuous experience in the fixing of the specified material.
C. Take responsibility for providing the trades with complete information on the materials and equipment to be installed.
D. Review sub-contractor's Shop Drawings and obtain the project manager's approval in writing. Refer DOCUMENT 00800 SUPPLEMENTARY CONDITIONS OF CONTRACT, clause 27.
E. Take care with tolerances and dimensional variations.

### 104 References

Comply with applicable portions of the following Australian Standards:

| | |
|---|---|
| AS 1288 2006 | Glass in buildings - Selection and installation. *Plus 1 Supplement, 2006 and 2 Amdts, 2008 - 2011.* |
| AS/NZS 2208 1996 | Safety glazing materials in buildings. *Plus 1 Amdt, 1999.* |

### 105 Submissions

If not specified in Part II Materials, the following submissions are required before ordering materials:

### 106 Delivery, Handling and Storage

Handle materials with care. Do not store on site. Install directly in place. Store sealants as instructed by the manufacturers.

## PART II MATERIALS

### 201 Acceptable Manufacturers

### 202 Selection of Mirror Types

A. 3mm, 4mm or 6mm thick, (Silver quality twin coated glass mirror)
B. Fully toughened silver quality twin coated glass mirror.
C. Laminated to 3mm clear glass with 0.38mm thick interlayer to comply with relevant sections of AS/NZS 2208.
D. 300 x 300 x 3mm thick glass mirror tiles ground and polished on edges.
E. Clear (no tint)
Bronze, grey, gold, green, blue, peach or black tinted.
F. Clear acrylic sheet "mirror", 3mm thick.

### 203 Accessory Materials

A. Neutral curing (non-acetic) clear silicone adhesive:
applied to the edges of frameless mirrors.
applied to the edges of laminated glass mirrors.
B. Chrome plated solid brass mirror clips, type:
with flannelette pads between the mirror and the clips.
two-part brass fixing screws with domed brass heads screwed onto the fixing screws
chrome plated finish
clear lacquered polished brass
provided at all corners of each mirror

clear anodised
anodised to selected colour
selected colour polyester powdercoat finish applied in accordance with the manufacturer's printed instructions.
ball bearing type extruded aluminium printed instructions
ball bearing type extruded aluminium tracks and fittings
Manufacturer:
Type:
Finish:

C. 12.70 x 9.53 x 1.57 Alcan H 9660 or similar extruded and clear anodised aluminium angles.
D. Free brushed flannelette fabric.
E. Double sided foam adhesive tape 24mm wide.

**204 Fixing Holes**

Drill mirrors 8mm diameter at each corner to receive face fixing screws. Locate holes 75mm minimum from edges of mirrors.

**205 Recessed Finger Pulls**

Grind and polish, 75mm long, 20mm wide, 3mm deep recessed finger pulls, 50mm back from one vertical edge of each sliding glass mirror door.

**206 Proprietary Brand Mirror Systems**

A. Mirror faced proprietary brand sliding door system provided complete with components recommended by its manufacturer.
B. Or an alternative mirror faced bi-fold door system provided complete with components recommended by its manufacturer.

**207 Glass Edge Finishes**

Finish edges of glass mirrors as follows:
- ground smooth on edges.
- arrised, ground and polished on exposed edges.
- bevelled to angle of 80 degrees and ground and polished on edges.
- bevelled 20mm wide, 3mm deep and ground and polished on edges.

## PART III EXECUTION

**301 Examination**

Inspect site conditions before start of work on site, before delivery of materials. Ensure conditions are satisfactory for installation. Perform rectification required before delivery of materials.
Start of work means total acceptance of conditions.

**302 Preparation**

Ensure tasks and activities comply with the Act, Regulation, Code of Practice or Australian Standards, as relevant.
Prepare surfaces affected by the installation in accordance with material manufacturer's instructions. Clean glass surfaces immediately before applying silicone sealants to the edges of mirrors. Remove dirt, insecure coatings, moisture and other substances that could interfere with the bond of the sealant.
Thoroughly clean down the backings to remove dust, dirt and other substances that:
- could interfere with the bond of the adhesive
- could interfere with the bond of the double sided tape

Sand down gloss surfaces of backings to provide porous type finish.
Seal new plasterboard or hard plaster backings with 1 coat of pigmented sealer.

**303 Edge Sealing to Mirrors**

Arris the outer corner of backings and seal around edges of the mirrors with clear neutral cure (non-acetic) silicone sealant gunned into place between the backings and the edges of the mirror and finished off to smooth even fillet lapping slightly over the back edges of the mirror.

**304 Support Angles to Bonded Mirrors**

12.70 x 9.53 x 1.57 Alcan H 9660 or similar extruded clear anodised aluminium angles provided continuously along the bottom edges of flannelette bonded glass mirrors. Set the support angles with the 12.70mm flange vertical.
Fix the support angles to the backings using 13mm long counter-sunk head screws spaced 150 maximum o.c.'s along the angles. Glue the angles to the backings in addition to screwing using a clear 2 pot epoxy glue. Set to true straight level lines to ensure a continuous bearing surface along the bottom edge of the mirror.

**305 Fixing of Polarex/Flannelette Bonded Mirrors**

Cover mirrors on the back surface with free brushed flannelette fabric pressed into the adhesive and thoroughly smoothed to remove air bubbles and wrinkles. The adhesive should not saturate the cloth, and keep the top surface of the cloth dry and fluffy. Leave to harden for approximately 12 hours.

After this adhesive has hardened, apply a full coat of adhesive to the surface of the backing and spread evenly to cover the whole area of the mirror.
When "tacky" press the mirror firmly into position until the mirror is bonded to the backing such that full adhesion is maintained over at least 90% of the mirror for approximately 1 or 2 minutes.
Provide spaces of at least 2mm width between adjacent mirrors to allow for expansion and movement in the backing material.
Paint the backing behind these spaces black. 5 litres of adhesive is sufficient for approximately 25 square metres.

**306 Clip Fixing of Mirrors**

Fasten mirrors to the backings using chrome plated brass mirror clips screwed to the edges of the backings using chrome plated counter-sunk Phillips head screws.
Provide flannelette pads between the clips and the mirror. The pads are to be of the same width as the clips.

**307 Face Fixing of Mirrors**

Fasten mirrors to the backings using proprietary brand brass screws through holes drilled through the mirror. Provide domed caps screwed onto the threaded outer ends of the screws - refer to clause 203 of this trade section.

**308 Proprietary Brand Systems**

A. Proprietary brand glass mirror faced sliding door systems installed in accordance with manufacturer's printed instructions.
B. Proprietary brand glass mirror faced bi-fold door system installed in accordance with the manufacturer's printed instructions.
C. Install in the exposed grid, suspended metal ceiling grid in accordance with the manufacturer's printed instructions. Provide 3mm minimum clearance between the panels and the vertical flanges of the ceiling grid rails.

**309 Protection**

A. Aluminium components: protect metal surfaces as necessary during erection and until Practical Completion. Finish surfaces free from mechanical imperfections such as scratches, scrapes, dents, spots, stains and streaks.
B. Mirrors: protect mirrors from breakage immediately upon installation until Practical Completion. Remove and replace mirrors and metal parts that are broken, cracked, abraded or damaged in other ways before, after or during installation up to the date of Practical Completion at no additional cost to the proprietor.

**310 Cleaning**

A. Remove labels, excess silicone, stains, spots and other foreign matter from mirrors, frames, hardware and other finished surfaces immediately upon completion of the installation of each mirror. Use cleaning systems recommended by the manufacturer of the mirror type.
B. Debris: remove rubbish and debris resulting from glazing operations each day.

**311 Completion**

Complete contracted work in accordance with contract documents and written variation orders issued by the project manager.

**END OF SECTION**

## PART I GENERAL

### 101 Scope

The work of this trade section includes but is not limited to the supply and installation of cement render work on new concrete and/or masonry surfaces.

### 102 Related Work

Co-ordinate and co-operate with the following trades:

| | |
|---|---|
| Masonry | Ceilings |
| Electrical wiring | Door frames |

### 103 Quality Assurance

A. Supply and installation of render base and surface treatment is to be performed by an approved sub-contractor known for reliability, quality of work and performance.

B. At a location and time to be selected by the project manager, construct a complete prototypical installation approximately 3m square. Include elements provided under this section and finish in every respect. On approval by the project manager, the prototype will become the standard for the remaining work, and will remain as part of the work.

### 104 References

Comply with applicable portions of the following Australian Standards:

| | |
|---|---|
| AS 1672.1 1997 | Limes and limestones – Limes for building. |
| AS 3700 2011 | Masonry structures*. There is 1 Supplement 2012* |
| AS 3972 2010 | General purpose and blended cements. |
| CIA Z39 2008 | Render finishes. |

Render is a data sheet published by Cement Concrete & Aggregates Australia. Visit www.concrete.net.au

### 105 Delivery, Handling and Storage

General: deliver manufactured materials in the original packages, containers, or bundles bearing the name of the manufacturer and the brand.

Protect materials from dampness. Store off the ground or slab, under cover and away from wet walls and other damp conditions.

### 106 Warranty

On completion of the work, provide a warranty through the builder to the proprietor stating that the work is secure against defects including delamination from substrate, "blowing", "grinning", and "crazing" for the period of years from the date of Practical Completion.

## PART II MATERIALS

### 201 Render Materials

A. Cement: Grey Portland. Conform to AS 3972.

B. Sand: clean, sharp, washed free from loam, organic matter or soluble impurities, conforming with the following table:

| Sieve size<br>No. | Retained on each sieve<br>% |
|---|---|
| 4 | 0 |
| 8 | 5 |
| 16 | 30 |
| 30 | 65 |
| 50 | 95 |
| 100 | 100 |

Soluble salts content (W/W%) 0.15 max.

NOTE: When instructed by project manager, arrange for laboratory tests to be carried out on sand samples at no cost to proprietor.

C. Lime (if required): Hydrated lime.

D. No additives may be used without project manager's written approval.

### 202 Accessories

Supplied by Rondo Building Services Pty. Ltd.:
Refer www.rondo.com.au.
External Corner Bead, R01, R03 or R04
Bullnose External Corner, R06
Stopping Bead, R11, R12 or R13
Expansion Joints, R45.

Where render is applied over stud walls, fix metal lath to manufacturer's instructions.
Lathing: galvanised expanded metal lathing, Lysaght, PL25, or other approved.

**203 Mixes**

Render over masonry and concrete substrates: not greater than 6 parts sand, 1 part lime, 1 part cement, by volume. Machine mix materials.

## PART III EXECUTION

**301 Examination**

Acceptance: notify project manager of discrepancy or unsuitability of substrate.
Start of work means total acceptance of conditions.

**302 Preparation**

Ensure tasks and activities comply with the Act, Regulation, Code of Practice or Australian Standards, as relevant.
Remove foreign material, dust, dirt, oil, nails and other material which could reduce bonding of render to the surface.

**303 Application of Render**

Where render is applied over very smooth masonry, first apply 2 separate coats of Cemstik, Bondcrete or Bondseal. If in doubt, check with project manager.
Alternatively, bag on to surface a mix of 1 part cement and 1 part sand.
Nominal thickness:

A. Single coat: 15mm of render.
B. 2 coats, base coat: 8-10mm thick.

Comb in 2 directions, and allow to dry over 5 days minimum.
Finish coat, a fine even exposed sand finish, 6-8mm thick.
Where instructed by project manager, damp roll or fine spray and lightly acid etch before thoroughly washing down.
Use material within 30 minutes of the addition of the water. Beyond this time, discard the mix. Do not re-temper.

**304 Movement Control Joints**

A. Locate movement control joints to coincide with junction of differing wall materials (reinforced concrete/blockwork), at maximum 6 metre centres.
B. Form joints continuously to extend neatly and clearly up to adjacent abutting surfaces. Form with approved mastic sealant and an approved fully compressible joint filler or similar.

**305 Internal Corners**

Finish square internal (re-entrant) vertical corners of walls and columns.

**306 External Corners**

Finish external vertical corners slightly rounded to approximately 4mm radius.

**307 Extent of Rendering**

Extend rendering into recesses, jambs, returns etc.

**308 Covering Concealed Chases**

Before rendering, form covers over chases in walls and columns for pipes, conduits, cables, etc., with galvanised expanded metal lathing lapped 150mm over recess, fixed with galvanised nails or power driven fasteners and washers, spaced at maximum 300mm centres. Fix lathing before first coat of render.

**309 Door and Window Frames**

Unless otherwise detailed, stop render short of door and window frames so that no bond occurs to frames. Rake back to a gap of 3mm at the surface. Finish the gap with paintable silicone rubber joint sealant.

**310 V-Joints**

Form V-Joints in render where steel door frames are flush with render, also where insitu concrete beams abut brickwork or blockwork and where concrete or masonry walls abut plasterboard or timber substrate.

**311 Cleaning**

Clean up and remove from site excess materials and debris resulting from operations. Clean and restore to original condition adjacent materials affected by the work.

**312 Completion**

Complete contracted work in accordance with contract documents and written variation orders issued by the project manager.

**END OF SECTION**

## PART I GENERAL

### 101 Scope

The work of this trade section includes but is not limited to:
Preparation supply and installation of textured coating.
Preparation supply and installation of bagged finish

### 102 Related Work

Co-ordinate and co-operate with the following trades:
Masonry
Concrete
Window frames
Door frame
Fibre cement panels
Cement render

### 103 Quality Assurance

A. The selected subcontractor is to have a minimum of 5 years' experience in the application of the specified or similar material, and is to be known for reliability, performance and quality of work.

B. At a location and time to be selected by the project manager construct a complete prototypical installation approx. 3m square. Include all elements provided under this trade section and finish in every respect. On approval by the project manager, the prototype will become the standard for the remaining work, and will remain as part of the work.
Obtain approval for colour from the project manager.

### 104 References

| | | |
|---|---|---|
| AS/NZS 4548 | Guide to long-life coatings for concrete and masonry. | |
| | 4548.1 1999 | Wall coatings - Latex extensible. |
| | 4548.2 1999 | Latex finish coatings - High build, low profile. |
| | 4548.3 1999 | Textured coatings - Non-aggregate. |
| | 4548.4 1999 | Latex - Textured coatings - Aggregate filled. |
| | 4548.5 1999 | Guidelines to methods of test. |

### 105 Delivery, Handling and Storage

Deliver materials in sealed (where applicable) containers and store in a dry location on the site.

### 106 Submissions

The project manager will supply to the contractor a sample of the required material from the range obtained from the supplier.
The sample will indicate all aspects of the required finish, size of granules, colour, texture, finish etc.
An appropriate supplier's specification may be available from the project manager.

### 107 Warranty

Provide a warranty to the proprietor covering cracking, peeling and fading for a period of years.

## PART II MATERIALS

### 201 Acceptable Suppliers

### 202 Material

Bagging
Mortar for bagging:
Same mortar as used for laying
Colour: M3 mortar, with powdered metallic oxide pigment added to achieve a dry colour approved by the project manager.

## PART III EXECUTION

### 301 Examination

Inspect surfaces to be treated and notify project manager of any discrepancy or unsuitability of substrate.
Comply with manufacturer's recommendations regarding environmental conditions.
Start of work means total acceptance of conditions.

**302 Preparation**

Ensure tasks and activities comply with the Act, Regulation, Code of Practice or Australian Standards, as relevant.
Do not proceed with the installation in unsuitable weather.
Protect wood, metal, glass and other finished work during progress.
Make good damage in every respect at no additional cost to the proprietor.
Provide and install required scaffolding, hoisting equipment, etc. in accordance with statutory authority regulations.
Mask dissimilar materials adjacent to surfaces to be treated in order to avoid contact - e.g. metal frames and cappings. Do not apply material over soft surfaces such as jointing material.

**303 Application**

Apply in accordance with manufacturer's recommendations regarding mixing of materials and application methods.

**304 Finish**

Match approved sample panel - refer clauses 103 and 105.

**305 Protection**

Protect finished surfaces against damage until Practical Completion.

**306 Cleaning**

At completion of work remove debris, scaffolding, erection materials, etc. and leave surfaces in a condition entirely satisfactory to the project manager.

**307 Completion**

Complete contracted work in accordance with contract documents and written variation orders issued by the project manager.

**END OF SECTION**

## PART I GENERAL

**101 Scope**

Supply and install a complete installation of plasterboard including but not limited to:
Plasterboard
Plasterglass
Flexible plasterboard, 6.5mm thick in 2 layers
Lining of concrete and masonry walls
Lining of steel stud walls
Lining with water-resistant plasterboard
Ceilings, drop walls, bulkheads
Fire-rated plasterboard walls/ceilings
Cornices.

**102 Related Work**

Co-ordinate and co-operate with the following trades:

| | |
|---|---|
| Masonry walls | Electrical |
| Stud walls | Other: |
| Suspended ceilings | |

**103 Quality Assurance**

Prototype: at a location selected by the project manager, construct a complete prototypical installation of plasterboard on each different substrate.
Each sample, full height by 3600 wide includes elements required by this specification and finish in every respect. When approved by the project manager, this sample will remain part of the work and becomes the standard for the remaining work.

**104 References**

Comply with applicable portions of the following Australian Standards:

| | |
|---|---|
| AS/NZS 2589 2007 | Gypsum linings - Application and finishing. |
| HB 161 2005 | Guide to plastering |

**105 Delivery, Handling and Storage**

Deliver manufactured materials in bundles and packages bearing the name of the manufacturer and the brand. Handle with care. Remove damaged materials from the site. Protect stored materials from damage and damp, or materials which may cause deterioration.

**106 Warranty**

Provide warranty covering the work against defective materials and workmanship for a period of years from the date of Practical Completion. The warranty includes a statement that the whole of the work has been carried out in accordance with relevant Australian Standards and Codes and manufacturer's instructions in effect at the time of installation.

## PART II MATERIALS

**201 Acceptable Manufacturers**

**202 Materials**

Supply materials in accordance with material supplier's recommendations for each application.

## PART III EXECUTION

**301 Examination**

Acceptance: visit site and inspect conditions, comparing conditions to drawings before delivery of materials to site. Rectify any discrepancy or unsuitability of substrate.
Start of work means total acceptance of conditions.

**302 Preparation**

A. Ensure tasks and activities comply with the Act, Regulation, Code of Practice or Australian Standards, as relevant.
B. Co-ordinate with and ensure preparatory work by other trades is done prior to commencement of work; failure to do so will involve removal of plasterboard and immediate rectification.

C. Arrange for provision of additional stud, nogging, trimmed openings, boxed studs, fixing grounds, etc., required for satisfactory execution of the work of this trade including penetrations through plasterboard for services. Co-operate in installation of frames, duct openings, etc**.**

D. Space enclosure: do not install materials until space is enclosed and weatherproof, and until wet-work in space is completed and nominally dry.

**303 Layout and Tolerances**

A. Check dimensions of areas and surfaces to which material is applied before installation begins.

B. Measure each area and establish layout pattern.

C. All finished work is to be within + 2mm of the sizes shown on the relevant drawings.

**304 Installation - General**

A. Comply with manufacturer's installation instructions. Anchor and fasten materials and components to comply with ratings and performance requirements, and to comply with governing local regulations. Comply with appropriate Australian Standard.

B. Take care of and protect surrounding work, including other finishes, equipment and components, during installation. Provide protective covering where necessary.

**305 Installation Particulars**

**306 Finishing Details**

General: apply treatment at board joints (both directions), flanges of trim accessories, penetration, fasteners, heads, surface defects and elsewhere as required to prepare work for decoration. Pre-fill open joints and rounded or bevelled edges, using type of compound recommended by manufacturer.

Apply fibreglass joint tape at joints between boards, where a trim accessory is indicated, or where extra strength is required.

**307 Protection**

Protect finished work. Make good damage in every respect at no additional cost to the proprietor, and without delay to job progress.

**308 Cleaning**

A. Adjust and clean: clean exposed surfaces including trim, edge moldings, and comply with manufacturer's instructions for cleaning and touch-up of minor finish damage. Remove and replace work which cannot be successfully cleaned and repaired to permanently eliminate damage.

B. Remove spatterings and droppings resulting from work. Remove daily surplus materials and rubbish from the work area.

C. Leave floors broom clean at completion.

**309 Completion**

Complete contracted work in accordance with contract documents and written variation orders issued by the project manager.

**END OF SECTION**

## PART I GENERAL

**101 Scope**

Supply and install drywall partitions including but not limited to:
Steelwork
Stud wall framing
Plasterboard
Fire-rated plasterboard
Other panelling materials
Pre-surfaced panels of plasterboard etc.
Other:

**102 Related Work** Co-ordinate and co-operate with the following trade sections:

| | |
|---|---|
| Floor construction | Ceiling construction |
| Floor treatment | Electrical wiring |
| Skirtings | Plumbing |
| Wall construction | Painting |
| Wall finishing | |

**103 Quality Assurance** Prototype: at a location selected by the project manager on site, construct a full size prototype of:

Include in each prototype all elements required by this specification, and finish in every respect.
When approved by the project manager, such samples will be the control standard and remain part of the work.

**104 References**

Comply with applicable portions of the following Australian Standards:

| | | |
|---|---|---|
| AS 1428 | Design for access and mobility. | |
| | 1428.1 2009 | General requirements for access – New building work. |
| | *There are 5 other parts. 1992 – 2010.* | |
| AS 1684 | Residential timber-framed construction. *There are many parts and Supplements, 1999 – 2010 and Amdts 2012, 2013.* | |
| AS/NZS 2589 2007 | Gypsum linings - Application and finishing. | |
| | 2589.1 1997 | (Available Superseded) Gypsum plasterboard. |
| | 2589.2 1997 | (Available Superseded) Fibre reinforced gypsum plaster. |
| AS 3623 1993 | Domestic metal framing. | |
| AS/NZS 4600 2005 | Cold-formed steel structures. *Plus 1 Amdt, 2010.* | |

**105 Delivery, Handling and Storage**

Deliver manufactured materials in bundles and packages bearing the name and manufacturer, and the brand. Handle with care. Remove damaged materials from the site. Protect stored materials from damage and damp, or materials which may cause deterioration.

**106 Warranty**

Provide warranty covering the work against defective materials and workmanship for a period of years from the date of Practical Completion. Include a statement that the whole of the work has been carried out in accordance with relevant Australian Standards and codes and manufacturer's instructions in effect at the time of installation.

## PART II MATERIALS

**201 Acceptable Manufacturers**

**202 Materials**

Supply materials in accordance with material supplier's recommendations for each application.

**203 Material Specials**

## PART III EXECUTION

**301 Examination**

Visit site and inspect conditions, comparing conditions to drawings before delivery of materials to site. Rectify discrepancy or unsuitability of substrate.
Start of work means total acceptance of conditions.
Space Enclosure: do not install materials until space is enclosed and weatherproof, and until wet-work in space is completed and nominally dry.

**302 Preparation**

A. Ensure tasks and activities comply with the Act, Regulation, Code of Practice or Australian Standards, as relevant.

B. Co-ordinate with and ensure preparatory work by other trades is done prior to commencement of work; failure to do so will involve removal of dry wall partition and immediate rectification.

C. Arrange for provision of additional stud, nogging, trimmed openings, boxed studs, fixing grounds, etc., required for satisfactory execution of the work of this trade including penetrations through plasterboard for services. Co-operate in installation of frames, duct openings, etc.

**303 Installation General**

A. Comply with manufacturer's installation instructions. Anchor and fasten materials and components to comply with ratings and performance requirements, and to comply with governing local regulations. Comply with appropriate Australian Standard.

B. Take care of and protect surrounding work, including other finishes, equipment and components, during installation. Provide protective covering where necessary.

**304 Installation Particulars**

**305 Protection**

Protect finish work. Damage made good in every respect at no additional cost to the proprietor, and without delay to job progress.

**306 Finishing Details**

General: apply treatment at board joints (both directions), flanges of trim accessories, penetrations, fasteners, heads, surface defects and elsewhere as required to prepare work for decoration. Pre-fill open joints and rounded or bevelled edges, using type of compound recommended by manufacturer.

Apply fibreglass joint tape at joints between boards, where a trim accessory is indicated, or where extra strength is required.

**307 Cleaning**

A. Adjust and Clean: clean exposed surfaces including trim, edge moldings, and comply with manufacturer's instructions for cleaning and touch-up of minor finish damage. Remove and replace work which cannot be successfully cleaned and repaired to permanently eliminate damage.

B. Remove spatterings and droppings from work. Remove daily surplus materials and rubbish from the work area.

C. Leave floors broom clean at completion.

**308 Completion**

Complete contracted work in accordance with contract documents and written variation orders issued by the project manager.

**END OF SECTION**

## PART I GENERAL

### 101 Scope

Supply and install ceramic tile work including but not limited to:
Preparation of surfaces before tiling or bedding.
Bedding screeds where required.
Wall tile.
Floor tile.
Cleaning of finished tiled surfaces.

### 102 Related Work

Co-ordinate and co-operate with the following trades:
Wall construction Floor construction

### 103 Quality Assurance

A. Qualifications: tiling sub-contractor to submit to project manager evidence of reliability in quality of work and performance.
B. Samples: provide samples of tiles specified; not less than 4 units of each.
C. Sample panel: for each tile type, floor and wall, construct a sample panel, 1 metre square. When approved by the project manager this sample becomes the standard for the balance of the work and remain as part of the completed work.

### 104 References

Comply with applicable portions of the following Australian Standards:

| | | |
|---|---|---|
| AS 1428 | Design for access and mobility. | |
| | 1428.1 2009 | General requirements for access – New building work. |
| | *There are 5 other parts. 1992 – 2010.* | |
| AS/NZS 3661.2 1994 | Slip resistance of pedestrian surfaces – Guide to the reduction of slip hazards. | |
| AS 3740 2010 | Waterproofing of domestic wet areas. *1 Amdt, 2012* | |
| AS 3958 | Ceramic tiles. | |
| | 3958.1 2007 | Guide to the installation of ceramic tiles. |
| | 3958.2 1992 | Guide to the selection of a ceramic tiling system. |
| AS 3972 2010 | General purpose and blended cements. | |
| AS 4586-2013 | Slip resistance classification of new pedestrian surface materials. | |
| HB 197 1999 | An introductory guide to the slip resistance of pedestrian surface materials. | |

Contact www.ardexaustralia.com for technical advice regarding waterproofing matters and technique.

### 105 Submissions

Copies of minutes of pre-installation conference.
Submissions required prior to installation: product specifications for:
adhesives, primers, prepared grouts, moisture resisting admixtures.

### 106 Delivery, Handling and Storage

Deliver to the site in original, unopened containers with grade, type and quality indicated on the labels. Provide secure and dry storage.

### 107 Warranty

Provide a warranty covering defects in materials and installation for a period of years from the date of Practical Completion.

## PART II MATERIALS

### 201 Screed Materials for Masonry Walls, Concrete Floors

| **Item** | **Type Required** | |
|---|---|---|
| Cement | Portland cement, comply with AS 3972, cement type A | |
| Sand | Clean, washed, sharp, sieved and graded, complying with the following limits: | |
| Sand grade | **No** | **% Passing sieve** |
| | 4 (4.75mm) | 100 |
| | 8 (2.36mm) | 95-100% |
| | 100 (150 microns) | 25% max |
| | 200 (75 microns) | 10% max |
| Fineness modulus | 1.6 to 2.5% | |
| Water demand ratio by weight | 0.65% maximum | |

| Item | Type Required |
|---|---|
| Aggregate | Passing 4.75m sieve 80%<br>Passing 6.00mm sieve 90%<br>Passing 8.00mm sieve 100% |
| Water | Clean, drinking quality |
| Mesh | Galvanised steel, welded wire fabric: minimum 2.5mm diameter wires at 100mm centres each way. |

**202 Adhesives and Sealants**

**A.** Bond and seal all tiles with low or zero VOC sealants.
B. Exterior/wet area adhesives: cement-based ceramic tile adhesive.
C. Interior/dry area adhesives: organic based adhesive.

**203 Underlay and Backing Boards**

A. Underlay over timber floors:
B. Ceramic tile wall-backing for stud walls:
C. Fastenings: Use fastenings supplied by material manufacturers in each case.
D. Waterproof membrane: recommended by an approved manufacturer.

**204 Tile**

Supply: specified tiles are available from the following suppliers:

**205 Table of Tile Finishes**

Refer Schedule of Finishes and drawings.

| Maker | Tile Size | Tile Colour | Texture | Special |
|---|---|---|---|---|
| | | | | |
| | | | | |

**206 Grout**

Prepared grout: inorganic Portland cement integrated, ready-to-use, dry-curing grout. Colours to project manager's selection.
Supply waterproof grout for wet area tiling.

**207 Expansion Joints**

Silicone rubber, as recommended by manufacturer. Colour to project manager's selection.

**208 Spare tiles**

Deliver to the site in unopened boxes, spare specified tiles equivalent to 5% of the total area of ceramic tiles laid.
Do not deliver to the site until directed by the project manager. Place in the final storage location.

## PART III EXECUTION

**301 Examination**

Visit site and inspect conditions, comparing conditions to drawings, before delivery of materials to site.
Ensure tasks and activities comply with the Act, Regulation, Code of Practice or Australian Standards, as relevant.
Rectify any discrepancy or unsuitability of substrate.
Start of work means total acceptance of conditions.

**302 Conditions of Installation**

A. Install backing boards or panels in accordance with manufacturer's precise instructions.
B. Allow cement-rendered surfaces to dry out at least 7 days, and preferably 14 days, before tiling. Longer curing times are required if recommended by adhesives' manufacturers.
C. Rectify substrate so that when checked with a 2m straightedge, gap under the straightedge does not exceed 6mm.
D. Allow new concrete to dry out for at least 4 weeks before rendering or direct fixing of tiles.
Wall screeds: uniform in plane and lightly combed. Floor screeds: broom finished.

**303 Setting Out**

A. As far as possible, set out work so that no tile less than half size occurs. Align joints in floor tile at right angles to each other and straight with walls to conform to patterns selected. Verify locations of equipment before installing tile. Co-ordinate with plumbing and other trades. Fully tile surfaces under surface-mounted items.
B. Expansion Joints
Set out panels of tiling so that tiles may expand or contract to and from corners of tiled walls and floors. Allow for expansion in each corner of 5mm minimum. Fill expansion joints with silicone rubber.
C. Control Joints

1. Provide control joint
   At junctions of dissimilar wall construction.
2. In walls, no more than 2.5 apart.
3. At junctions of wall and floor in multi-storey buildings.

D. Form junctions of different materials (e.g. tiles to carpet) so that they occur under the centre line of doors.

**304 Bedding Mixing**

A. Tile fixing mortar is to be adequately cohesive and water retentive but not richer than 1:3 nor leaner than 1:4 cement/sand by volume.
   Within these limits the choice of the precise proportions is governed by the need to produce a mortar of the required properties with the minimum water content. These proportions will depend on the sand in use and is found by practical trial before tile fixing starts.

B. Once the proportions are established, make every attempt to minimise random variations. Batch by weight wherever possible. Do not batch with shovels.

C. The mixing of mortars by a suitable machine is to be preferred whenever it is practicable.

D. Volume batching: base batching on multiples of a whole bag of cement (50kg, approximating 0.035m3 or 35 litres). In such cases measure by volume using correctly made gauge boxes or other suitable containers of fixed, measurable volume. This method allows water addition to be checked and thus permits approximate mix proportions to be established and maintained.

E. Where mixing by machine is not possible, mortars may be mixed on a clean non-absorbent surface using clean hand tools. Whatever method of mixing is used, blend the materials thoroughly in the dry state before water is added. Continue mixing until the batch has a uniform consistency.

F. No water should be added once mixing is complete. Discard mortar which is unused within 2 hours of adding the mixing water.

**305 Bedding Methods**

A. Portland Cement bedding, semi-dry mix method:
   1. Mix: 1 part cement to 4 parts of sand by volume, mixed dry, with only sufficient water added to make a crumbly consistency which retains its shape when squeezed in the hand. It is important to ensure complete mixing of the cement and sand.
   2. Before laying the mix, establish finished floor levels by means of dots. Spread roughly to a thickness slightly greater than that required for the actual bed.
      Thoroughly compact and draw-off to the required level. Lay only sufficient bedding mix for one man to deal with satisfactorily in one operation.
   3. Pour a slurry consisting of 1 part cement to 1 part sand by volume with sufficient water to make it slightly fluid, over the bedding and spread with a trowel until it is about 3mm thick.
      Place tiles, which preferably are dry, in position and firmly beaten into the bedding. Form joints of at least 2mm and regulating should be done at this time.
      Wash off if necessary after the joints have set thoroughly.
   4. Minimum bedding thickness 25mm.

B. Bedding with adhesives (walls only):
   1. Apply adhesive to a thin bed or thick bed according to site conditions:
      a. Apply thin bed adhesives when the background is true to within 3mm when tested with a 2 metre straight edge, at thickness not less than 1.5mm and not more than 3mm. Apply with a notched trowel.
      b. Apply thick bed adhesives when deviations up to 6mm, over a 2 metre length, are present in the background, or when applying tiles having deep keys or ribs on their backs. Thick bed adhesives should be used at thicknesses not less than 3mm and not exceeding 12mm. Apply with either 10 x 10 x 10mm notched trowel, solid bed or buttering method.
   2. Application methods:
      a. Notched trowel method: apply the adhesive to the background as a screed, then form ribs by combing it with a notched trowel of the type recommended for the particular application. Do not apply adhesive in areas larger than 1 square metre at a time.
      b. Solid bed method: apply the adhesive to the background as a screed and bring it to a true surface, working in 1 square metre area at a time.
      c. Buttering method: spread the adhesive evenly over the back of the tile to a thickness slightly greater than the final bed thickness required, so that when the tile is pressed or tapped firmly into position, the correct thickness is achieved and the tile is solidly bedded over its entire surface.
   3. Apply dry tiles immediately into the adhesive, before it skins.
   4. Press the first tile firmly into position and then remove it to check that complete contact is being made with the adhesive. Make occasional similar checks throughout the tiling work. The whole of the back of the tile is to be in good contact with the adhesive. Do not allow voids to occur beneath tiles.
   5. Remove surplus adhesive remaining on the face of the tile or in the tile joints, after fixing, before it skins.
   6. Form joints straight and constant in width. Under no circumstances fix tiles with tight joints.
   7. Allow tiles to set for a minimum 24 hours before grouting and protect from weather, water penetration, etc. during this period.
   8. Expansion joints: refer clause 303 B, complying with AS 3958.1. See clause below.

C. Cement based adhesive method for extruded, quarry or terracotta floor tiles:
Secure to a prepared concrete surface with cement based adhesive 10mm thick with a 10mm notched trowel. Comply with manufacturer's current instructions

**306 Installation - General**

A. Wall tiling: comply with the recommendations of AS 3958.1 and AS 3740.
B. Floor tiling: comply with the recommendations of AS 3958.1 and AS/NZS 3661.2.
C. Adhesives: comply with recommendations of adhesive manufacturer.
D. Sealing: where tiles are cut around penetrations for taps and outlets, seal thoroughly with silicone rubber to prevent water entry behind tiles.
E. Membrane: install to manufacturer's instructions, with a 100% waterproof result.

**307 Tolerances and Cleaning**

A. General: install tiles in true planes so that when checked with a 2m straightedge, gap under the straightedge does not exceed 3mm. In sloped floor tiling this tolerance does not apply across intersections of fall planes. Adjust tiles within 10 minutes of fixing.
B. Cleaning: cleaned down using a damp cloth before cement smears and surplus mortar begin to harden on the surface or in the joint spaces, care being taken to avoid disturbance of the tiles during the setting of the bedding.
C. Lighting: whenever possible the lighting at the time of applying the bedded finish is not to be appreciably different from the ultimate permanent lighting.

**308 Grouting**

A. Except as otherwise required, do not commence grouting for at least 24 hours after placing of tile. Follow specific instructions of materials manufacturer.
B. Grout mix:
   1. General use, except as noted below: Apply an approved pigmented prepared grout mix, 1 part Portland cement to 1 part fine dry sand by volume mixed to a paste consistency with the minimum of water; too wet a mix may result in the joint filling cracking or drying out.
   2. Floors: Prepared grout, acid resistive.
   3. Walls: Epoxy-based mortar grout, mildew resistant.
   4. Colours: as selected by the project manager.
C. Grouting and curing:
   1. Apply the grouting mix to as large an area as can be worked before hardening commences. Apply with a squeegee working back and forth over the area until the joints are completely filled. Remove surplus grout from the tiles with the aid of a damp, not wet, cloth and the joints then tooled. After the grouting has dried, final polish using a clean, dry cloth.
   2. Remove surplus grout from the floor surface; on no account use sawdust for this purpose, as there is a danger that sawdust entering moist joint surfaces may break down their strength, and cause them to become porous.
   3. In dry weather, grout joints after maintaining damp condition for 3 days by sponging down, fog-spraying or other methods. Allow floors to set 48 hours before permitting ordinary foot traffic.

**309 Protection**

Prevent walking on or contact with floor or wall tiles for a minimum of 7 days. During that period, cover floor tiles.

**310 Completion**

Complete contracted work in accordance with contract documents and written variation orders issued by the project manager.

**END OF SECTION**

## PART I GENERAL

### 101 Scope

Supply and install a complete system of suspended ceilings including but not limited to:
Plasterglass ceilings.
Plasterboard ceilings.
Acoustic tile ceilings.
Bulkheads.
Ceiling access panels.
Insulating material.
Mineral fibre fire resistant duct spray.
Fire-rated ceilings.

### 102 Related Work

Co-ordinate and co-operate with the following trades:

| | |
|---|---|
| Roof framing | Structural steel |
| Concrete | Mechanical services |
| Masonry | Plasterboard |

### 103 Quality Assurance

A. Prototype
At a location and time to be selected by the project manager construct a complete prototypical ceiling installation in one bay from one column to another of each ceiling type. Include elements provided under this trade section and finish in every respect. When approved by the project manager, the prototype becomes the standard for the remaining work, and will remain as part of the work.

B. Acoustical ceilings installer
Sub-contractor is to have not less than 3 years of successful experience in installation of ceilings similar to requirements for this project and who is acceptable to manufacturer of each ceiling type.

### 104 References

Comply with applicable portions of the following Australian Standards:

| | |
|---|---|
| AS/NZS 2785 2000 | Suspended ceilings - Design and installation. |
| AS 2946 1991 | Suspended ceilings, recessed luminaires and air diffusers - Interface requirements for physical compatibility. |
| AS/NZS 4600 2005 | Cold-formed steel structures. *Plus 1 Amdt, 2010.* |

### 105 Samples

A. Acoustical ceiling tile: provide samples of tile, as selected by project manager to be supplied; not less than 2 units of each.

B. Provide one sample of each of the following elements:
1. Rounded cornice
2. Cornice internal angle
3. Cornice external angle

C. Suspension systems: provide sample of each component of suspension and acoustic suspension system, including both standard shapes and accessories.

### 106 Delivery, Handling and Storage

Deliver manufactured materials in the original packages, containers, or bundles bearing the name of the manufacturer and the brand.
Protect materials from dampness. Store off the ground or slab, under cover and away from wet walls and other damp conditions, in secure storage.

### 107 Warranty

Provide warranty covering the work against defective materials and workmanship for a period of years from the date of Practical Completion.
Include a statement that the whole of the work has been carried out in accordance with relevant Australian Standards and manufacturer's instructions in effect at the time of installation.

## PART II MATERIALS

### 201 Acceptable Manufacturers

### 202 Materials

A. Suspension system
(one way exposed)
(two way exposed)

B. Plasterboard 10mm, 13mm

C. Plasterglass
D. Acoustic tile
Tile size:
E. Ceiling access panels
F. Cornice
G. Beads, straps, etc.
H. Casing beads, stop-ends, etc.
I. Other items:

**203 Accessories**
Supply and install necessary accessories as indicated by component manufacturer for satisfactory and complete installation.

**204 Equipment**
Supply equipment, forms, scaffolding, ladders, frames, etc. necessary for the satisfactory installation of specified items.

## PART III EXECUTION

**301 Examination**
Acceptance: visit site and inspect conditions, comparing conditions to drawings before delivery of materials to site. Rectify unsuitable situation.
Start of work means total acceptance of conditions. Comply with referenced Standards and manufacturer's recommendations regarding environmental conditions.

**302 Preparation**
Space enclosure: do not install interior acoustical ceilings until space is enclosed, is weatherproof until wet-work in space is completed and nominally dry until work above ceilings completed, and until ambient conditions of temperature and humidity will be continuously maintained at values near those indicated for final occupancy.
Protect wood, metal, glass, flooring and other finished work during progress. Damage is to be made good in every respect at no additional cost to the proprietor.
Prepare areas and surfaces against which installation will be constructed. Ensure work by other trades is completed before erecting suspension system.
Powder driven fasteners are not approved for use.

**303 Installation**
Ensure tasks and activities comply with the Act, Regulation, Code of Practice or Australian Standards, as relevant.
Comply throughout with applicable portions of AS/NZS 2785, or AS 2946, and with the data sheets supplied by material manufacturer.

**304 Field Quality Control**
When requested by project manager, arrange for manufacturer's representative to visit site and check installation.

**305 Adjustment**
Adjust installation to permit installation of such items as light fittings, mechanical vent registers and the like.

**306 Protection**
Protect completed installation from possible damage until issue of Practical Completion certificate.

**307 Cleaning**
Clean surfaces exposed to view. Replace sections or components which cannot be cleaned. Make good damaged sections or panels affected by later work of other trades.

**308 Completion**
Complete contracted work in accordance with contract documents and written variation orders issued by the project manager.

**END OF SECTION**

## PART I GENERAL

### 101 Scope

Supply and install a complete wood parquet floor installation including but not limited to:
Surface preparation of base.
Hardboard underlay
Laying parquet flooring
Sanding and sealing of complete floor

### 102 Related Work

Co-ordinate and co-operate with the following trades:
Concrete
Floor construction

### 103 Quality Assurance

Tradesmen engaged for this work are required to be widely experienced in the class of work specified.
Arrange with the project manager to lay and complete as a sample of the required parquetry in a chosen location, an area of three square metres of parquetry complete in all respects.
When approved by the project manager, the sample becomes the control standard for the remaining work and remain part of the completed work.
Pre-installation conference: attend a pre-installation conference with builder and project manager to arrange for entirely satisfactory conditions to be achieved before installation.

### 104 References

Comply with applicable portion of the following Australian Standards:

| | |
|---|---|
| AS 2796.1 1999 | Timber - Hardwood - Sawn and milled products - Product specification. |
| AS/NZS 3661.2 1994 | Slip resistance of pedestrian surfaces – Guide to the reduction of slip hazards. |
| AS 4586-2013 | Slip resistance classification of new pedestrian surface materials. |
| HB 197 1999 | An introductory guide to the slip resistance of pedestrian surface materials. |

### 105 Submissions

Submit prior to ordering materials:

A. Samples and product data of specified materials.
B. Test reports of similar installations.
C. Manufacturer's instructions.
D. Moisture level content of slab

### 106 Delivery, Handling and Storage

Deliver materials in manufacturer's containers and packaging.
Store in a secure location, preferably in the space where material will be installed.
Handle in a manner which prevents damage, deterioration or loss.

### 107 Project Site Conditions

Lighting level during installation is to match completed light level.
Ensure that wet work is complete and that no liquids can affect the area in which parquetry is to be laid.
Moisture content of sub-floor is not to exceed 5.5% moisture content.
In air conditioned buildings, ensure that equipment and blocks for parquetry are exposed to full and efficient operation of the air conditioning for minimum of two weeks before installation of parquetry. If not possible, consult supplier of parquetry. Parquetry is to achieve equilibrium moisture content (E.M.C) appropriate to the location prior to sanding and sealing (check with Floor Laying & Finishing Assoc.)
Adhesive should not be used as a levelling compound. Avoid excessive radiant heat from sunlight through windows.

### 108 Warranty

Provide to the proprietor, a warranty covering defective materials and installation for year(s) from date of Practical Completion.

### 109 Maintenance

Supply a maintenance manual to the builder (2 copies) at completion of the work.
The manual is to include types and frequency of maintenance, specifying materials to be applied and tools and equipment to be used.

## PART II MATERIALS

### 201 Acceptable Suppliers

The following are acceptable suppliers and installers of parquetry and associated materials:

**202 Materials**

Brush box, tallowwood, Johnstone River hardwood, Tasmanian oak, cypress pine, tulip oak, spotted gum, blue gum, iron bark, turpentine, jarrah, other.
Adhesives:
As recommended by the supplier and installer of the parquetry.
Underlay:
As recommended by the supplier and installer of the parquetry.

**203 Pattern**

The pattern of parquetry required is

**204 Surfacing Material**

Sealer, spirit-based wax or polyurethane.

**205 Ordering Materials**

Timber for block parquetry is required to be ordered as soon as the head contract is signed and the parquetry subcontractor is selected, to allow sufficient time for preparation and drying of the timber.

## PART III EXECUTION

**301 Examination**

Visit the site and inspect the conditions thoroughly. Note actions required following pre-installation conference.
When satisfactory, advise builder in writing that sub-floor is acceptable.
Ensure tasks and activities comply with the Act, Regulation, Code of Practice or Australian Standards, as relevant.
Start of work means total acceptance of conditions.

**302 Preparation**

Arrange with builder for all required rectification. On completion of the work, make all tests required including those of the standards. Refer clause 104.
Concrete floors are to be finished with steel trowel.
Comply with referenced standards.
Ensure that no liquids are used in preparation of the surface.
Moisture content of the sub-base is not to exceed 5.5% at time of laying parquetry.
Make random tests to ensure this limit is not exceeded.
Record all tests.
Ensure that no wax, curing compound, admixtures, additives, oil, grease or any deleterious matter is present on the floor.
Ensure that the space where parquetry is to be laid is secure: windows are glazed and sealed, doors are hung and lockable, wet trades are finished and lighting matches finished light level.
Ensure that power is available.

**303 Installation**

Comply with documentation regarding material and pattern of parquetry.
Comply with specific provisions of AS 1262. Refer any options to project manager for decision in advance of laying.
Provide for expansion joints at perimeter of areas of parquetry. Where required, fill expansion gap at perimeter with cork after neatly cutting the perimeter of the parquetry.
Apply the adhesive in manageable areas, install parquetry to approved pattern.
Clean the floor thoroughly.

**304 Sanding**

Allow a few days after completing the installation before sanding.
Sand first with 40 grit paper.
Second time with 60 grit paper.
Third time with 100 grit paper.
Fourth time with 120 grit paper.
Sand confined areas with an electric sanding edger.
Ensure that all scratches, blemishes and undulations have been removed.

**305 Finishing**

Remove all dust thoroughly and apply either:
Three coats of polyurethane finish to manufacturer's instructions.
OR
Oil seal finish to oil manufacturer's instructions.
OR
Spirit-based wax to manufacturer's instructions.

**306 Protection**

Protect installation of parquetry until completion of the project.

Where necessary, lay hardboard panels in traffic areas.
Remove on completion.

**307 Cleaning**

At completion of work, keep and maintain finished surfaces clean and free from dust, dirt and other foreign matter.

**308 Completion**

Complete all contracted work in accordance with contract documents and written variation orders issued by the project manager.

**END OF SECTION**

## PART I GENERAL

**101 Scope**

Supply and install floating floors including but not limited to:
Timber surface tongue and grooved panels:
of sandwich construction
of plywood construction
of solid timber construction
Laminate top surface
Cork top surface
Foam base

**102 Related Work**

Co-ordinate and co-operate with the following trades:
Concrete floor construction
Timber floor construction
Joinery, site built

**103 Quality Assurance**

A. Perform work with experienced tradesmen familiar with the quality of work required and who are approved in writing by the manufacturer.
B. Arrange for conference with relevant trades to establish and settle matters which may affect installation.
C. At a location and time to be selected by the project manager, construct a complete prototypical installation, approximately 3 square metres.
D. Include elements required by this specification and finish in every respect. On approval by the project manager, the prototype will become the standard for the remaining work and remain as part of the work.

**104 References**

AS/NZS 3661.2 1994 Slip resistance of pedestrian surfaces – Guide to the reduction of slip hazards.
[ AS 4586-2013 Slip resistance classification of new pedestrian surface materials.
HB 197 1999 An introductory guide to the slip resistance of pedestrian surface materials.
Obtain most recent written installation instructions provided by the manufacturer.

**105 Submissions**

Submit for approval by the project manager each component required for installation. When approval is provided, order materials.

**106 Delivery, Handling and Storage**

Deliver materials when floor surfaces have been prepared. Deliver in the original packages. Do not store on site. Install directly in place.

**107 Warranty**

On completion of the work, provide a warranty to the proprietor stating that the installation is without defects and deterioration, including delamination
for the period of years from the date of Practical Completion.

## PART II MATERIALS

**201 Acceptable Manufacturers**

**202 Materials**

A. Timber surface panels:
   1. Sandwich construction
   2. Solid timber construction
B. Laminate surface panels:
C. Cork top surface:
D. Underlay:

**203 Finish**

## PART III EXECUTION

**301 Examination**

Visit site and inspect conditions in each area to have new floors laid.

Ensure tasks and activities comply with the Act, Regulation, Code of Practice or Australian Standards, as relevant.
Start of work means total acceptance of conditions.

**302 Preparation**

A. Ensure that areas to receive floor panels:
B. Are secure against penetration by water.
C. Concrete, if it is the base floor material, has a moisture content not exceeding 6%.
D. Are level with no more than 3mm variation in 3 metres.
E. Have holes or depressions filled with stable material which dries completely.

**303 Laying Pattern**

Comply with project manager's instructions regarding laying pattern.

**304 Laying Floor**

Comply throughout with manufacturer's written instructions.
Lay underlay and panel to achieve required result.
Take care with materials. Do not damage surface during installation. Protect laid floor panels from damage by other trades.

**305 Finish**

Where no finish is applied before delivery, apply finish on site in accordance with manufacturer's instructions.

**306 Completion**

Complete contracted work in accordance with contract documents and written variation orders issued by the project manager.

**END OF SECTION**

## PART I GENERAL

### 101 Scope

Supply, prepare, install and finish complete wood strip flooring including but not limited to:
Preparation of framing before laying flooring.
Seasoning of flooring materials within the building before laying.
Installation
Sanding
Application of finish

### 102 Related Work

Co-ordinate and co-operate with the following trades:
Carpentry
Wall construction

### 103 Quality Assurance

Tradesmen engaged for this work are required to be widely experienced in the class of work specified.
Arrange with the project manager to lay and complete a sample of the required strip flooring in a chosen location, one room.
When approved by the project manager, the sample becomes the control standard for the remaining work and will remain part of the completed work.
Pre-installation conference: attend a pre-installation conference with Builder and project manager to arrange for entirely satisfactory conditions to be achieved before installation.

### 104 References

National Timber Development Association supplies a manual: “Timber Strip Floors, Fixing and Finishing” which can be downloaded from www.timber.net.au.
Comply with applicable portions of the following Australian Standards:

| | | |
|---|---|---|
| AS 1810 1995 | Timber - Seasoned cypress pine - Milled products. | |
| AS 2796 | Timber – Hardwood - Sawn and milled products. | |
| | 2796.1 1999 | Product specification. |
| | 2796.2 2006 | Grade description. |
| | *There is 1 other part, 1999.* | |
| AS/NZS 3661.2 1994 | Slip resistance of pedestrian surfaces – Guide to the reduction of slip hazards. | |
| AS 4586-2013 | Slip resistance classification of new pedestrian surface materials | |
| HB 197 1999 | An introductory guide to the slip resistance of pedestrian surface materials. | |

Selected supplier to supply full details of materials and method of installation at time of tendering for the work.

### 105 Submissions

Submit prior to ordering materials:
Samples and product data of specified materials.
Maintenance instructions for use by the owner

### 106 Delivery, Handling and Storage

Deliver materials in manufacturer's containers and packaging. Repair damaged packaging. Do not open packaging until the building is roofed, windows and doors are installed, wet trades complete and water below flooring is prevented.
Store in a secure location, preferably in the space where material will be installed.
Handle in a manner which prevents damage, deterioration or loss.

### 107 Project Site Conditions

A. Test moisture content of concrete below the timber floor framing. Do not lay strip flooring until moisture content is 5.5% or less. Where conditions are damp, lay an impervious plastic membrane on the moist surfaces.
B. Place a 3 metre straight edge on and across the top of floor joists.
Plane proud joist and pack low ones.
C. Allow the timber to acclimatise to the conditions in the building for 3 days before fixing, by laying out the boards in each room or area.
In air-conditioned buildings, fully acclimatise the boards to those conditions or have them dried to the appropriate moisture content before delivery.

## PART II MATERIALS

### 201 Suppliers

### 202 Materials

A. Timber Floor boards, Hardwood (or softwood)

Boards: 19 or 20mm thick, tongue and groove, maximum cover 85mm for secret nailing.
Nails: Hand or machine driven. Refer to Technical Bulletin.

B. Check moisture content of timber; coastal areas maximum 13% moisture, dry areas and air conditioned spaces 9%.

C. Jointing: End matched or finger jointed

**203 Finishing Coats**

A. Moisture curing polyurethane, matt, satin or high gloss.

B. Water-based polyurethane

C. Modified oil coating

D. Oil

**204 Ordering Materials**

Timber is required to be ordered as soon as the head contract is signed to allow sufficient time for preparation and drying of the timber.

## PART III EXECUTION

**301 Examination**

Visit the site and inspect the conditions thoroughly. Note actions required following pre-installation conference. When satisfactory, advise project manager in writing that sub-floor is acceptable.
Ensure tasks and activities comply with the Act, Regulation, Code of Practice or Australian Standards, as relevant.
Start of work means total acceptance of conditions.

**302 Preparation**

A. Prepare joists in accordance with clause 107B above.

B. Provide an expansion gap 10mm wide between strip flooring and walls or steps. Where floor width exceeds 6 metres, provide 10mm gap at doorways or equally space across the 6 metre width.

Deliver material when building is at lock-up stage. Open packages and spread across battens or joists for 7 days before fixing. Check moisture content of timber. In coastal areas do not use boards with a reading exceeding 13%. In dry areas and air-conditioned spaces no greater than 9%.
Ensure concrete base is thoroughly clean before installing boards.

**303 Laying Strip Floor Boards**

Lay each board so that it is supported by at least 3 joists. Ensure end joints are tightly closed and distributed evenly throughout the floor. Maintain minimum 450mm between butt joints in adjacent rows and joints of end matched board.
Cramp boards and secure with secret nailing.
Apply polyurethane adhesive to the top of joists on battens before nailing boards less than 80 mm wide.
Face nailed Flooring:
Provide expansion gaps of 10-15mm around the edges of each floor area. Place straight waste wood before each board to be cramped. Nail at minimum 20mm from edge of the board. Two nails for wide boards. Pre-drill nail holes in dense boards. Nails to be no less than 2.5 times the thickness of the board. Punch nails a minimum of 3mm below the surface.
Form junctions of different materials (e.g. tiles to carpet) so that they occur under the centre line of doors.

**304 Cramping For Top Nailed Boards**

Cramp a maximum of 6 boards together before driving two galvanised nails with heads 3mm below board surface.

**305 Secret Nailing**

Apply polyurethane adhesive to top of joists before nailing.
Cramp boards singly and nail on an angle through the tongue of each board.

**306 Sanding**

Allow a few days after completing the installation before sanding.
Sand first with 40 grit paper.
Second time with 100 grit paper.
Sand confined areas with an electric sanding edger.
Ensure that all scratches, blemishes and undulations have been removed.

**307 Finishing**

Remove all dust thoroughly and apply the specified material (see clause 203) in accordance with manufacturer's instructions.

**308 Protection**

Protect installation until completion of the project.
Where necessary, lay hardboard panels in traffic areas.
Remove on completion.

**309 Cleaning**

At completion of work, keep and maintain finished surfaces clean and free from dust, dirt and other foreign matter.

**310 Completion**

Complete all contracted work in accordance with contract documents and written variation orders issued by the project manager.

**END OF SECTION**

## PART I GENERAL

### 101 Scope

Supply and install resilient floor surfacing material with necessary accessories and related equipment required for the work including but not limited to:
Vinyl tile
Linoleum sheet
Vinyl sheet
Cork tile
Vinyl skirting
Rubber sheet or tile

### 102 Related Work

Co-ordinate and co-operate with the following trades:

| | |
|---|---|
| Concrete | Internal wall construction |

### 103 Quality Assurance

Suppliers and installers need to be widely experienced in the class of work required for the work of this section.
At a place selected by the project manager, construct a prototype of a completed installation of vinyl floor and skirtings, 3 square metres in area. On completion of the prototype and approval by the project manager of aspects of the installation, the work remains in place and becomes the standard for the remaining work.

### 104 References

Comply with applicable portions of the following Australian Standards:

| | |
|---|---|
| AS 1884 2012 | Floor coverings - Resilient sheet and tiles - Laying and maintenance practices. |
| AS/NZS 3661.2 1994 | Slip resistance of pedestrian surfaces – Guide to the reduction of slip hazards. |
| AS 4586-2013 | Slip resistance classification of new pedestrian surface materials |
| HB 197 1999 | An introductory guide to the slip resistance of pedestrian surface materials. |

Comply also with instructions of manufacturers of materials to be installed.

### 105 Submissions

Provide samples and data sheets of materials.
Obtain project manager's approval for each item before ordering.

### 106 Delivery, Handling and Storage

Deliver materials in the packaging of the supplier, bearing the brand name, colour, thickness and other relevant data.
Store materials in a secure dry area away from other materials which may cause deterioration.

### 107 Warranty

Provide a warranty covering aspects of the installation performed by this trade, against defective materials and workmanship for a period of years from the date of Practical Completion. The warranty includes a statement that the whole of the work has been carried out in accordance with AS 1884 and the instructions of the manufacturers of components in effect at the time of installation.

## PART II MATERIALS

### 201 Materials

Vinyl sheet:
Adhesive: refer AS 1884.
Vinyl tile:
Skirting:
Fibre cement underlay:
Stair treads:
Stair nosing:

### 202 Equipment

Supply equipment required for the preparation of floor, and installation of vinyl materials as recommended by the material manufacturer.

## PART III EXECUTION

### 301 Examination

Examine the site conditions applicable to each installation and comply with AS 1884.
Ensure tasks and activities comply with the Act, Regulation, Code of Practice or Australian Standards, as relevant.

Start of work means total acceptance of conditions.

**302 Preparation**

Prepare each area to be surfaced in accordance with AS 1884. Test the dryness of concrete sub-floor in accordance with AS 1884.

**303 Installation**

A. Delay installation of sheet until concrete has dried to the percentage established in Appendix A of AS 1884.
B. Adhesives: comply with AS 1884, and manufacturer's instructions.
C. Install material in accordance with AS 1884, including conditioning of both the materials and the sub-floor.
   1. Weld joints of vinyl sheet.
D. Skirting, to manufacturer's instructions.
E. Form junctions of different materials (e.g. tiles to carpet) so that they occur under the centre line of doors.

**304 Cleaning**

Remove excess adhesive and blemishes from the completed surfaces of flooring and skirtings.

**305 Protection**

Apply suitable hardboard or plywood to completed floors and maintain in position until final cleaning prior to Practical Completion.
Remove and replace work which cannot be successfully repaired or cleaned.

**306 Completion**

Complete contracted work in accordance with contract documents and written variation orders issued by the project manager.

**END OF SECTION**

## PART I GENERAL

### 101 Scope

Supply labour, materials and equipment required for supply, delivery, storage, installation and testing for the complete carpet installation.

### 102 Related Work

Co-ordinate and co-operate with the following trades:
Installation of floors Joinery
Preparation of surfaces under and adjacent to floors to receive carpet

### 103 Quality Assurance

The whole of the work is to be performed by thoroughly experienced and skilled tradesmen familiar with projects of this nature, under the direction of a similarly experienced foreman.

### 104 References

Comply with applicable portions of the following Australian Standards:

| | |
|---|---|
| AS/NZS 1385 2007 | Textile floor coverings - Metric units and commercial tolerances for measurement. |
| AS/NZS 2270 2006 | Plywood and blockboard for interior use. *Plus 1 Amdt 2007.* |
| AS/NZS 2455 | Textile floor coverings - Installation practice. |
| | 2455.1 2007 General. *Plus 1 Amdt 2009.* |
| | *This Standard provides full instructions of pre-installation requirements and installation methods.* |
| | 2455.2 2007 Carpet tiles. |
| AS 4288 2003 | Soft underlays for textile floor coverings. |

Maintain a copy of AS/NZS 2455.1 2007 General, at the project site until completion.

### 105 Submissions

Submit the following data and obtain approval from the project manager, before ordering materials:

A. List of recent major projects with contact names and telephone numbers.
B. Samples of carpet types and underfelt, 900 x 900 samples of each.
C. Base the tender price on 3660mm carpet.
D. Confirmation of acceptance of compliance with the requirements of the builder in relation to the time schedule for supply and laying.
E. Schedule of laying rates per lineal metre.
This schedule is binding upon the contractor and forms the basis on which additions, omissions and varied works may be carried out.
These rates include supply and installation of underlay and accessories, making and laying and allowances for profit, overhead and administration costs.
F. Static properties: provide test certificates from a recognised authority with the tender to confirm a reading of 2.5 kilovolts or less, when tested at 23ºC and 25% relative humidity.
G. Certification by manufacturer that materials comply with this specification.

### 106 Delivery, Handling and Storage

Deliver manufactured materials in the original packages, containers, or bundles bearing the name of the manufacturer.
Protect materials from dampness. Store off the ground or slab, under cover and away from wet walls and other damp conditions, in an approved secure location in the building.

### 107 Warranty

Provide a written warranty stating that materials supplied and installed under this contract will remain in good condition, secure against faulty workmanship and/or defective materials for a period of years from date of Practical Completion.

## PART II MATERIALS

### 201 Manufacturers

The following manufacturers are acceptable for this project:

### 202 Material

A. Underlay:
Comply with AS/NZS 2455.1.

B. Carpet fixings:
Comply with AS/NZS 2455.1, and is to be gripper type of an architectural standard.
Allow for installation of fixings at perimeters and around columns etc. not otherwise specified.
C. Metal finishing bar:

Heavy duty hammer finish aluminium bar.
Allow for finishing bars to be provided at doorways and junctions with other materials, or fix carpet edge against raised vertical brass strip.

D. Carpet:
Carpet qualities similar to those specified may be submitted and if deemed by the project manager to be equivalent, may be considered:
Carpet Type A
Carpet Type:
Carpet Width:
Gauge:
Pile Height:
Carpet Type B
Carpet Type:
Carpet Width:
Gauge:
Pile Height:
Tolerances: AS/NZS 1385.

E. E Adhesives:
1. Direct stick and dual fix.

**203 Testing Carpet**

A. The project manager will select the carpet testing authority and supervise the selection of samples for testing. The contractor is required to pay for carpet testing.

B. Special runs of carpet
Before manufacture of carpet, arrange for testing of materials at fibre blending stage and the various tests to completion of manufactured carpet.
Submit test results immediately to the project manager.

C. Stock carpet
Make available to the project manager for testing, samples in quantities suitable for applicable tests and colour confirmation.

**204 Carpet Colour Sample**

Before commencing the production run of the carpet, supply 3 x 200 x 200mm samples of the selected colour(s) of carpet. Obtain project manager's written approval before manufacture.

**205 Laying Diagrams**

Prepare laying diagrams showing locations and directions of seams and cross joints. Submit to obtain approval from the project manager before making up carpet.

**206 Inspection Before Making**

Inspect carpet before starting make up or laying carpet to ensure that:
A. The width is within the specified tolerances.
B. Colour variations are within the specified tolerances.
C. The carpet is free from colour streaks, oil or grease spots, etc.
D. The carpet generally conforms to the specification by written substantiation of tests.
Reject carpet not conforming to the required standards.

**307 Spare Carpet**

Provide spare carpet of each type laid.
Deliver to the site wrapped with secure protection.
Do not deliver to the site until directed by the project manager. Place in its final storage location.

## PART III EXECUTION

**301 Examination**

Acceptance: visit site and inspect conditions, comparing conditions to drawings before delivery of materials to site. Notify project manager of discrepancy or unsuitability of substrate. Comply with appropriate clauses of AS/NZS 2455.1.
Ensure tasks and activities comply with the Act, Regulation, Code of Practice or Australian Standards, as relevant.
Start of work means total acceptance of conditions.

**302 Preparation**

Comply with referenced Standards and manufacturer's recommendations regarding environmental conditions. Comply with AS/NZS 2455.1. Comply with Appendix B to ensure moisture content of concrete does not exceed the stated limit.
Space enclosure: do not install material until space is enclosed and weather-proof, until wet-work in space is completed and nominally dry, and until ambient conditions of temperature and humidity will be continuously maintained at values near those indicated for final occupancy.
Repair by approved means imperfection of the floor surface which might impair the finished carpeted surfaces.

Broom clean or vacuum clean surfaces upon which carpet is to be laid.
On completion of cleaning, obtain project manager's approval of surface and follow such standard as he may determine for preparation throughout the project.

**303 Carpet Fixings**

Secure to the sub-floor in accordance with the manufacturer's instructions, and the recommendations of the Standard.
Form junctions of different materials (e.g. tiles to carpet) so that they occur under the centre line of doors.

**304 Laying Underlay**

Comply with AS/NZS 2455.1
Cover the whole area to be carpeted.

**305 Stretching Carpet**

Tightly stretch carpet between fixings, using power stretchers where necessary. Maintain seams in straight lines.
Comply with AS/NZS 2455.1.

**306 Carpet Seams**

Comply with AS/NZS 2455.1.

**307 Demountable Partitions**

Partitions which are shown having:

A. Carpet on one side and another floor finish on the other side will be erected before the carpet is laid.
B. Carpet on both sides, will be erected after the carpet is laid.

**308 Carpets for Lifts**

Supply a total of 2 removable carpets for each of the lift cars shown on drawings.
Build up the carpets on a flexible backing to which a layer of "Air-Step" and carpet are laminated with edges reinforced by binding and edging.
The lift carpets are to be fire-proofed in accordance with the requirements of the controlling authorities. Provide certificates of fire-proofing.

**309 Installation on Stairs**

Comply with AS/NZS 2455.1.

**310 Cleaning and Protection**

Comply with AS/NZS 2455.1.
On completion of laying each section of carpet, remove dirt, threads, scraps of left-over carpet, etc., and vacuum the surface clean and free from dust, etc.
After inspection by the project manager, cover the carpet in each section with an approved protective covering. Maintain the cover in good order and condition, remove the same and finally clean the carpet at Practical Completion.

**311 Completion**

Complete contracted work in accordance with contract documents and written variation orders issued by the project manager.

**END OF SECTION**

## PART I GENERAL

### 101 Scope

Supply labour, materials and equipment required for supply, delivery, storage, installation and testing for the complete Modular Carpet installation.

### 102 Related Work

Co-ordinate and co-operate with:
Installers of floors
Joinery
Preparation of surfaces under and adjacent to floors to receive carpet.

### 103 Quality Assurance

A thoroughly experienced and skilled tradesmen familiar with projects of this nature, under the direction of a similarly experienced foreman, is required.

### 104 References

Comply with applicable portions of the following Australian Standards:

| | |
|---|---|
| AS/NZS 1385 2007 | Textile floor coverings - Metric units and commercial tolerances for measurement. |
| AS/NZS 2270 2006 | Plywood and blockboard for interior use. *Plus 1 Amdt, 2007.* |
| AS/NZS 2455 | Textile floor covering - Installation practice |
| | 2455.1 2007 General. *Plus 1 Amdt, 2009.* |
| | *This Standard provides full instructions of pre-installation requirements and installation methods.* |
| | 2455.2 2007 Carpet tiles. |

Maintain a copy of AS/NZS 2455.1 2007 General, at the project site until completion.

### 105 Submissions

Submit the following data and obtain approval from the project manager before ordering materials:

A. List of recent projects with contact names and telephone numbers.
B. Full size sample module of each carpet type.
C. Confirmation of acceptance and compliance with the requirements of the builder in relation to the time schedule for supply and laying.
D. Schedule of laying rates per square metre.
These rates include supply and installation of adhesive (if required) and accessories, cutting (where required) and allowances for profit, overheads and administration costs.
E. Properties: provide test certificates from recognised authorities with the tender to confirm that the modular carpet complies with the properties set down in clause 204.
F. Certification by the manufacturer that the materials comply with this specification.

### 106 Delivery, Handling and Storage

Deliver manufactured materials in the original packages, containers, or bundles bearing the name of the manufacturer.
Protect materials from dampness. Store off the ground or slab, under cover away from wet walls and other damp conditions in an approved location in the building.

### 107 Carpet Module Manufacturer's Guarantees

Provide a written confirmation from the manufacturer or his accredited representative that the carpet modules have been properly installed and that subject to the carpet modules being properly maintained indoors in a commercial installation, the carpet modules to the affected area/s will be replaced by the manufacturer at his expense if any of the following occur:

A. Surface pile in area wears more than ten percent (10%) within 10 years of installation.
On stains the period of this guarantee is 5 years.
B. Horizontal dimensions of the modules vary from the specified dimensions by more than .2 percent (0.2%) within ten years of installation as measured by the Aachen Test undertaken by an independent test authority.
C. The modular carpet installation will not disrupt electronic office equipment (which is otherwise operating properly) to cause malfunction by induced static charges.
D. The modular carpet installation, in a commercial installation, is guaranteed to control static shock below 3.5 kilovolts when the relative humidity is no less than 20% and the room test is 70ºF. (AATCC Test 134-1975).

### 108 Modular Carpet Installation Contractor's Warranty

Provide a written warranty stating that materials supplied and installed under this contract will remain in good condition, secure against faulty workmanship and/or defective materials for a period of … years from the date of Practical Completion.

## PART II MATERIALS

### 201 Acceptable Manufacturers

### 202 Accessories

Provide extruded aluminium edge trims
Plain clear anodised aluminium (silver), (gold), (bronze)
Flexible p.v.c. edge trims (gold), (black)
Provide black, flexible p.v.c. stair nosing or equivalent
Provide extruded plain aluminium stair nosing or equivalent filled with a black p.v.c. insert
Provide stair tread nosing or equivalent filled with back slip resistant infill bars

### 203 Carpet

Modular carpet similar to those specified may be submitted and if deemed by the project manager to be equivalent, may be considered
Modular carpet type A
Manufacturer:
Type of carpet:
Module size:
Modular carpet type B:
Manufacturer:
Type of carpet:
Module size:
Tolerances: AS 1385

### 204 Properties

Comply with the following minimum properties:
Generic type
Face fibre
Yarn count/ply
Yarn preparation
Ends
Tufts
Tuft density
Type tuft
Density factor
Tile height
Yarn weight
Primary backing
Secondary backing
Structure
Total weight
Total thickness
Tile size
Tile per box
Dimensional stability
Pile thickness
Performance Specifications:

| Name | Number | Results |
|---|---|---|
| Electrostatic propensity | AATCC-134 | |
| IBM ohm resistance | | |
| Dimensional stability | AACHEN | |
| Colour fastness | AATCC-8 | |
| Flame Resistance | | |
| | 1. smoke developed index-max | |
| | 2. spread of flame index-max | |

### 205 Non-slip Materials

Water based substance recommended by its manufacturer as suitable for use as a pressure sensitive non-slip compound.
100mm wide double sided tape with a releasable pressure sensitive coating recommended by its manufacturer as suitable for the purpose of preventing the slippage of the modular floor tiles.

### 206 Testing Carpet

A. Before ordering the carpet, provide four no. tiles of the specified modular carpet for testing by the Australian Wool Testing Authority.
B. During the production run of the carpet supply an additional four no. modular tiles for testing as specified in "A" above.

Carry out tests at each of the above stages to confirm specified static properties.
Allow for and pay for the costs of tests.

**207 Carpet Colour Sample**
Before commencing the production of the carpet, supply three (3) tiles of the selected modular carpet to the project manager for written approval of colour and pattern.

**208 Identification**
Mark modular carpet tiles on the back to identify the manufacturer and the type of modular carpet.

**209 Carpet Pattern Design Drawings**
Lay the modular carpet to patterns, colours and designs shown on the project manager's drawings.

**210 Laying Diagrams**
Prepare laying diagrams showing locations and directions of joints, types, patterns and colours of the modular carpet.

**211 Inspection Before Laying**
Inspect modular carpet tiles before laying to ensure that:
A. The tiles are of types, patterns and colours specified.
B. Colour variations are within the specified tolerances.
C. The tiles are free from colour streaks, oil or grease spots, etc.
D. The carpet generally conforms to the Specification.
Reject modular carpet tiles not conforming to the required standards.

**212 Spare Carpet Modules**
Deliver to the site in unopened boxes spare modular carpet tiles equivalent to 5% of the total area of carpet laid.
Do not deliver to the site until directed by the project manager. Place in the final storage location.

## PART III EXECUTION

**301 Examination**
Visit the site and inspect conditions comparing conditions to drawings before delivery of materials to the site.
Notify the project manager of discrepancy or unsuitability of the substrate.
Ensure tasks and activities comply with the Act, Regulation, Code of Practice or Australian Standards, as relevant.
Start of work means total acceptance of conditions.

**302 Preparation**
Comply with referenced standards and manufacturer's recommendations regarding environmental and other on-site conditions.
Repair by approved means imperfections of the floor surface which might impair the finished carpeted surfaces.
Broom clean or vacuum clean surfaces upon which carpet is to be laid.
On completion of cleaning, obtain project manager's approval of surface and follow such standard as he may determine for preparation throughout the project.

**303 Space Enclosure**
Do not install material until space is enclosed and weather-proof and until wet-work in space is completed and nominally dry, and until ambient conditions of temperature and humidity will be continuously maintained at values near those indicated for final occupancy.

**304 Nap-lok Bars**
Fix Nap-lok bars with each length fixed to the sub-floor using fastenings recommended by the manufacturer of the Nap-lok bars as suitable for the respective sub-floors.
Comply with the requirements of AS/NZS 2455.1.
Fix Nap-lok bars with each length fixed to the concrete sub-floor using Sebco "Scruins" set in neatly drilled holes in the concrete and spaced at each end at 225m centres between the end fixings.
Comply with the requirements of AS/NZS 2455.1.

**305 Setting Out**
Before laying modular carpet tiles, accurately establish two starting chalk lines towards the centre of the room or area and at precisely 90º to each other.
Commencing only at the cross-over point of the chalk lines, complete one row of modules on each side of the centre line.
From this point proceed in accordance with the manufacturer's printed instructions.

**306 Pressure "Sensitive" Non-slip Compounds**
Prevent modular carpet tiles for slippage in service by:

Pressure sensitive water based pressure sensitive non-slip compound, applied by paint roller at the rate of 10-15 sq. metres per litre depending on the absorption rate of the sub-floor and in strict accordance with the non-slip compound manufacturer's printed recommendations.
Pressure sensitive compound provided in a 350 gram pressure pack container, applied at the rate of 50-70 modules per container either to the whole of the sub-floor or the whole of the back of the modular carpet tiles in strict accordance with the non-slip compound manufacturer's printed recommendations.
Properly ventilate the area of use.
100mm wide double-sided tape with a releasable pressure sensitive coating laid along the centre line of modular carpet tiles in both directions.

**307 Laying – General**

Lay strictly in accordance with the manufacturer's printed directions.
Cut tiles from the back using a sharp knife and a cutting board.
Open boxes on site 24 hours before laying and mix up tiles of similar pattern and colour from different boxes.
Lay tiles hard up against each other and maintain tension on the tiles during laying by kneeling on the tiles as they are installed.
Use a knee kicker to ensure that tiles are laid hard up against each other.
Carefully scribe up to walls, columns, partitions and other fixed obstructions using techniques recommended by the manufacturer.

**308 Partitions**

Partitions will be erected prior to the laying of the modular carpet.

**309 Stairs**

Lay carpet tiles to treads with pile running into the step. Cut to tight fit between nosing trims and risers.
Lay modular carpet tiles to risers with pile running downwards glued only along the top edge, fitted neatly between the nosing trim and the tread and laid prior to laying the modular carpet tiles to the tread below.
Provide tread nosing (specified earlier) to the nosings of treads and landings fixed down to the stair treads before laying the modular carpet tiles to the stair and in accordance with the manufacturer's printed instructions.

**310 Access Floors**

Lay modular carpet tiles over access floors generally as for other floors.
Stagger joints between tiles with respect to the joints between the floor panels to prevent the flow of air from air conditioning systems causing dust to pass through the joints.
Fix down modular carpet tiles to the floor panels as specified for the other floors.

**311 Carpets For Lift Cars**

Modular carpet tiles for lift cars are to be fire-proofed in accordance with the requirements of the controlling authorities.
Provide certificates of fire proofing.
Permanently mark the fire-proofed carpet tiles on the back to denote that they have been fire-proofed.
Supply sufficient additional fire-proofed modular carpet tiles to provide two sets for each lift with each set cut to size where required to fit the lift floor and each tile clearly marked on the back to denote the lift car to which it belongs and its position on the car floor.
Provide two copies of floor plans of each lift and indicated on the plans the location of each modular tile utilising the identification markings on the back of the tile.

**312 Cleaning And Protection**

On completion of laying each section of carpet, remove dirt, scraps of left-over carpet, etc., and vacuum the surface clean and free from dust, etc.
After inspection by the project manager, cover the carpet in each section with continuous layer of 0.152mm thick clean polythene film with joints lapped 150mm minimum and continuously sealed with self-adhesive tape.
Batten and nail perimeters to the floor.
Maintain the cover in good order and condition and remove the same and finally clean the carpet at Practical Completion.

**314 Completion**

Complete contracted work in accordance with contract documents and written variation orders issued by the project manager.

**END OF SECTION**

## PART I GENERAL

**101 Scope**

Supply labour and materials, services and equipment necessary for the preparation, application and finishing of wall covering as indicated on drawings, schedules and as specified herein, to internal surfaces of building.
Refer to Schedule of Finishes.

**102 Related Work**

Co-ordinate and co-operate with the following trades:
Plasterboard
Hard plaster Painting
Other substrates to be wallpapered

**103 Quality Assurance**

The installer is to be widely experienced in the class of work required for the work of this section.
At a place selected by the project manager, prepare a test sample for all types. Test samples include the suitable preparation of substrates. After approval, the test samples remain in place and become the standard of the remaining work of the same type.

**104 References**

In the absence of Australian Standards, comply with applicable written recommendations of the manufacturer.

**105 Submissions**

Submit the following materials:
Product literature on proposed systems.
Samples of approved materials which are to be identified with the manufacturer's colour code batch number and colour name or match to scheduled colour code and name.
Samples are not to be less than 2 metres long and are to be of the same colour, pattern and type as scheduled.

**106 Delivery, Handling and Storage**

A. Bring all materials to the site and store in manufacturer's original packaging, bearing the manufacturer's standard label, indicating type, pattern and colour.
B. Store materials in designated spaces in a safe and secure manner. When not in use, keep such spaces locked and inaccessible to those not employed under this Trade Section.

**107 Warranty**

Provide a written warranty stating that preparation of surfaces, materials and material application installed under this contract will show no deterioration and remain in good condition for a period of years from the date of completion.

## PART II MATERIALS

**201 Materials**

Provide all materials necessary for preparation of surfaces and for application of wall coverings.

A. WALL COVERING:
   1. Manufacturer:
      a. Type:
      b. Pattern:
      c. Colour:
   2. Manufacturer:
      a. Supplier:
      b. Type:
      c. Pattern:
      d. Colour:
B. ADHESIVES:
   1. Manufacturer:
   2. Type:

**202 Table for Wall Covering**

| Room name or number | Wall | Substrate Surface | Type of Covering |
|---|---|---|---|
| | | | |
| | | | |
| | | | |

## PART III EXECUTION

**301 Examination**

Inspect all surfaces and determine that they are in proper condition to receive the work to be performed under this section.

Ensure tasks and activities comply with the Act, Regulation, Code of Practice or Australian Standards, as relevant.

The starting of work under this section means acceptance of such surfaces as being satisfactory. Correct defects in work resulting from accepting poor surfaces at no cost to the Proprietor.

**302 Preparation**

Prepare all surfaces as required so that they are in a proper condition to receive the work.

Comply with manufacturer's instructions. Remove dust, dirt, grease and other extraneous matter affecting the finished work.

Remove lighting fixtures, switches, power outlets and similar items in place prior to installation and reposition upon completion of each space.

**303 Protection**

Provide suitable protection in all areas where wall covering is being done to protect adjacent surfaces from damage during work.

**304 Application**

Execute all work of this section in strict compliance with the manufacturer's recommendations.

**305 Cleaning**

At completion of work in each area, thoroughly clean the area.

Replace wall fittings and fixtures previously removed.

**306 Spare Material Rolls**

Supply to the proprietor’s representative further material being 3% of the area of surfaces covered.

**307 Completion**

Complete all contracted work in accordance with contract documents and written variation orders issued by the project manager.

**END OF SECTION**

## PART I GENERAL

### 101 Scope

Supply labour and materials, services and equipment necessary for the preparation, application and finishing of painting and staining as indicated on drawings, schedules and as specified herein, to internal and external surfaces of building, as follows:
Refer Schedule of Finishes.
Consult with the project manager with regard to requirements of other trade sections of the specification which require painting, and include as part of the work of this trade section the appropriate preparation, painting, and finish required to complete the installation.

### 102 Related Work

Co-ordinate and co-operate with the following trades:
Substrates to be painted
Cleaning and finishing
Scaffolding

### 103 Quality Assurance

A. Compatibility of shop and field paints:
Determine that the materials specified in the Schedule of Finishes are compatible with shop coats. Failure to do so will be construed as accepting the paints specified. Contractor is to correct, at his own expense, defects in his work resulting from the use of such materials.

B. Test samples:
1. Prepare test samples for painting types and typical locations, where determined by the project manager. Do not commence painting of the substrate type until the sample is approved by the project manager. Apply samples in conditions approximating as closely as possible the lighting conditions of the finished work.
2. Test samples include the suitable preparation of substrates.
3. After approval, test samples are to be the standard for quality control of the completion of work of same type.

### 104 References

Comply with applicable portions of the following Australian Standards:

| | |
|---|---|
| AS/NZS 2311 2009 | Guide to the painting of buildings.<br>(NB: maintain this document at the project site by the contractor as a controlling general reference). |
| AS/NZS 2312 2002 | Guide to the protection of structural steel against atmospheric corrosion by the use of protective coatings. *Plus 1 Amdt, 2004.* |

### 105 Submissions

Submit the following materials:

A. Product literature on proposed painting systems.

B. Colour samples for approved painting materials. Identify samples with:
1. Manufacturer's colour code and colour name (if any).
2. Match to Schedule colour code and name.

C. Samples are not to be less than 100 x 100mm, and are to be of the same gloss level as the scheduled colour.

D. Copies of pre-installation conference minutes.

### 106 Delivery, Handling and Storage

Store materials in designated spaces in a secure manner which meets the requirements of applicable codes and fire regulations. When not in use, keep such spaces locked and inaccessible to those not employed under this section. Provide each space with a fire extinguisher of carbon dioxide or dry chemical type bearing a tag of recent inspection.
Bring materials to the building and store in manufacturer's original sealed containers, bearing the manufacturer's standard label, indicating type and colour. Deliver materials in sufficient quantities in advance of the time needed in order that work will not be delayed in any way.

### 107 Project Conditions

Temperature: comply with the requirements of clause 6.3 of AS/NZS 2311 The painting of buildings, and of paint manufacturers with regard to both ambient temperature and relative humidity.

### 108 Warranty

Provide a written warranty stating that preparation of surfaces, materials and material application installed under this contract will show no deterioration and remain in good condition for a period of years from date of Practical Completion.

## PART II MATERIALS

### 201 Materials

All internal paints are to be low VOC or environmental paints.
General: where manufacturer makes more than one grade of any material specified, use the highest grade of each type, whether or not the material is mentioned by trade name in these specifications.
Paints and finishes used for the project may be manufactured by one or more of the following manufacturers:
Taubmans.
Dulux.
Wattyl.
Pascol.
Other products may be approved by project manager. Apply to project manager for approval of alternatives.
Provide materials necessary for preparation of surfaces, and for application of paint finishes.

### 202 Schedules

A Schedule of Finishes is included in this specification.
The project manager will prepare a final Schedule of Colours in sufficient time before commencement of work.

### 203 Paint Types

### 204 Priming Materials

Colours of priming coats (and body coats where specified) are to be lighter than those of finish coat.

### 205 Spare Paint

Contractor to provide adequate left over paint for touching up and maintenance. To be supplied in well-sealed long-life containers of colour matched paints, clearly labelled and mapped to rooms/walls inside and outside the building (where applicable).

## PART III EXECUTION

### 301 Examination

Inspect surfaces and determine that they are in proper condition to receive the work to be performed under this trade section. Refer 302 A, below.
Ensure tasks and activities comply with the Act, Regulation, Code of Practice or Australian Standards, as relevant.
The starting of work under this trade section will be taken to mean acceptance of such surfaces as being satisfactory and defects in work resulting from accepting poor surfaces are to be corrected at no cost to the proprietor.
Refer AS/NZS 2311 Appendix C.

### 302 Preparation

A. General: prepared to a standard not less than that described under AS/NZS 2311, Section 3: Preparation of Un-Painted Surfaces inclusive, and other clauses of Australian Standards referenced therein.
This Standard is incorporated by reference as part of this specification and applies to the work below to the same extent as if written herein.

B. Broom clean floor surfaces before painting. Remove dust, dirt, plaster, grease and other extraneous matter affecting the finish work.

C. Putty-stop or plug nail holes and cracks on both exterior and interior work, as required. Natural or stained wood finishes are to have putty coloured to match. Putty wood after prime coat or sealer coat has been applied.

D. Clean bare metal surfaces of mill scale, rust, grease, oil, dirt, or other foreign matter, then properly washed with spirit or other approved cleaning agents. After cleaning, etch, pickle, prime, or otherwise prepare, as recommended by the paint manufacturer.

E. Remove blisters or other imperfections in previous coats caused by foreign substances or paint skins from painted surfaces before the subsequent coat is applied.

F. Rub down wood and metal surfaces before finishing and between coats with No. 00 and finer sandpaper or steel wool, leaving a perfectly clean surface. Sand smooth-finished surfaces before finishing and between coats as required to smooth out rough areas and to assure a smooth, even finish. Surfaces to receive paint are to be smooth and free of sandpaper scratches, mill-marks, and other imperfections.

G. Remove hardware, accessories, plates, lighting fixtures and similar items in place prior to painting and re-position upon completion of each space, or protect as otherwise directed by the project manager.

H. Thoroughly stir materials in containers before application, unless otherwise directed by the manufacturer of the paint used, to ensure uniformity of colour and mass. Strain out paint skins or other materials which would cause lumps or roughness. Thin only as recommended by the manufacturer.

### 303 Protection

Furnish and lay suitable drop cloths in areas where painting is being done to protect floors and other surfaces from damage during the work.

**304 Application**

A. General: execute work of this trade section in strict compliance with paint manufacturer's recommendations, and with the provisions of AS/NZS 2311, Section 6: Paint Application, inclusive. This standard is incorporated by reference as part of this specification and applies to the work below to the same extent as if written herein. In the event of conflict between manufacturer's recommendations and the provisions of AS/NZS 2311, manufacturer's recommendations govern.

B. Maintenance or repainting
Execute work of this trade section in strict compliance with paint manufacturer's recommendations, and with the provisions of AS/NZS 2311, Section 7: Maintenance of Painted Surfaces on inclusive and Section 8: Maintenance Painting Systems. This standard is incorporated by reference as part of this specification and applies to the work below to the same extent as if written herein. In the event of conflict between manufacturer's recommendations and the provisions of AS/NZS 2311, manufacturer's recommendations govern.

**305 Cleaning**

At completion of work in each area, remove paint spots, oil and stain from adjacent surfaces, including finish hardware.
Replace hardware previously removed.

**306 Completion**

Complete contracted work in accordance with contract documents and written variation orders issued by the project manager.

**307 Schedules**

**END OF SECTION**

## PART I GENERAL

### 101 Scope

Supply labour and materials, services and equipment necessary for the preparation, application and finishing of graffiti resistant materials as indicated on drawings, schedules and as specified herein, to internal and external surfaces of building, as follows:
Refer Schedule of Finishes.
Consult with the project manager with regard to requirements of other trade sections of the specification which require protection and include as part of the work of this trade section the appropriate preparation, painting, and finish required to complete the installation.

### 102 Related Work

Co-ordinate and co-operate with the following trades:
Substrates to be treated Cleaning and finishing
Scaffolding

### 103 Quality Assurance

Test samples:

A. Prepare test samples of each specified type 3 sq metres, where determined by the project manager. Do not commence protection/painting of the substrate type until the sample is approved by the project manager. Apply samples in conditions approximating as closely as possible the lighting conditions of the finished work.
B. Test samples include the suitable preparation of substrates.
C. After approval, test samples are to be the standard for quality control of the completion of work of same type.

### 104 References

Comply with applicable portions of the following Australian Standards:
AS/NZS 2311 2009 Guide to the painting of buildings.
(NB: maintain this document at the project site by the contractor as a controlling general reference).

### 105 Submissions

Submit the following materials:

A. Product literature on proposed protective systems.
B. Colour samples for approved protective materials.
C. Match to Schedule colour code and name.
D. Samples are not to be less than 100 x 100mm, and are to be of the same gloss level as the scheduled colour.

### 106 Delivery, Handling and Storage

A. Store materials in designated spaces in a manner which meets the requirements of applicable codes and fire regulations. When not in use, keep such spaces locked and inaccessible to those not employed under this section. Provide each space with a fire extinguisher of carbon dioxide or dry chemical type bearing a tag of recent inspection.
B. Bring materials to the building and store in manufacturer's original sealed containers, bearing the manufacturer's standard label, indicating type and colour. Deliver materials in sufficient quantities in advance of the time needed in order that work will not be delayed in any way.

### 107 Project Conditions

Temperature: comply with the requirements of the manufacturer with regard to both ambient temperature and relative humidity.

### 108 Warranty

Provide a written warranty stating that preparation of surfaces, materials and material application installed under this contract will show no deterioration and remain in good condition for a period of years from date of Practical Completion.

## PART II MATERIALS AND PRODUCTS

### 201 Acceptable Manufacturers

### 202 Materials

General: where manufacturer makes more than one grade of any material specified, use the highest grade of each type:

Other products may be approved by project manager. Apply to project manager in writing for approval of alternatives and include product data from the manufacturers.
Provide materials necessary for preparation of surfaces, and for application coatings.

## PART III EXECUTION

**301 Examination**

Inspect surfaces and determine that they are in proper condition to receive the work to be performed under this section. Refer 302, below.
Ensure tasks and activities comply with the Act, Regulation, Code of Practice or Australian Standards, as relevant.
The starting of work under this section will be taken to mean acceptance of such surfaces as being satisfactory and defects in work resulting from accepting poor surfaces are to be corrected at no cost to the proprietor.

**302 Preparation**

Consult with manufacturer of the material to be applied. Determine which system of preparation is to be adopted and apply this treatment in a test sample. Refer clause 103 above. Continue this action until the project manager is satisfied with the preparation treatment.

**303 Application**

Execute work of this section in strict compliance with paint manufacturer's recommendations, and as applicable. with the provisions of AS 2311, Section 7: Maintenance of Painted Surfaces inclusive and Section 8: Maintenance Painting Systems.

**304 Cleaning**

At completion of work in each area, remove paint spots, oil and stain from adjacent surfaces, including finish hardware.
Replace hardware previously removed.

**305 Protection**

Furnish and lay suitable drop cloths in areas where painting is being done to protect floors and other surfaces from damage during the work.

**306 Completion**

Complete contracted work in accordance with contract documents and written variation orders issued by the project manager.

**END OF SECTION**

## PART I GENERAL

**101 Scope**

Design, supply and install complete compartments and/or enclosures including but not limited to:
Toilet partitions, doors, panels etc.
Urinal partitions constructed of metal, particleboard, laminated surfaces, stone etc.

**102 Related Work**

Co-ordinate and co-operate with the following trades:

| | |
|---|---|
| Floor construction | Wall construction |
| Ceiling construction | Finishing trades |
| Plumbing fixtures | |

**103 Quality Assurance**

Ensure that the chosen contractor is widely experienced in the class of work required by this specification. Provide details of similar work satisfactorily completed, including names and telephone numbers of those for whom the work was done so they can be contacted for references.

**104 References**

AS 1428 Design for access and mobility.
1428.1 2009 General requirements for access – New building work.
*There are 5 other parts. 1992 – 2010.*

Comply with current written instructions of the manufacturer of the products specified.

**105 Submissions**

Provide to the project manager before ordering components:
Manufacturer's printed data on the specified products and installation instructions.

**106 Delivery, Handling and Storage**

Deliver all the materials to the site in totally satisfactory condition. Reduce storage of materials on site to a minimum. Do not install any damaged component or panel. Remove and replace all such items.

**107 Warranty**

Provide to the project manager a written warranty stating that all components of the complete installation will remain intact and in a satisfactory condition for year(s) from the date of Practical Completion.

## PART II MATERIALS

**201 Acceptable Manufacturers**

**202 Materials**

A. Toilet Partitions
   Fixed panels:
   Front panels:
   Doors:
   Supports at floor, wall, ceiling:
   Indicator bolts:
   Coat hangers:
B. Urinal Partitions
   as for A above

**203 Detail Design Provisions**

A. General: the project manager's drawings are to be considered essentially schematic except for profiles of exposed surfaces and panel arrangement where indicated. If, in the opinion of the builder a change of profile is required in order to meet the specification, arrange through the project manager for a review of the condition. Design the assembly, reinforcing and anchorage to suit each specified condition in an acceptable manner complying with the requirements specified herein.
B. Tolerances: design frames to accommodate building tolerances, and when completed, within the following tolerances:
   1. Deviation from plumb, level or dimensioned angle within 3mm per 3.5m of length of member, or 6mm in total run in line.
   2. Deviation from theoretical position on plan or elevation, including deviation from plumb, level or dimensioned angle not to exceed 9mm total at location.
   3. Change in deviation not to exceed 3mm for 3.5m run in direction.

## PART III EXECUTION

**301 Examination**

Inspect site conditions before fabrication, where possible, and before delivery of materials. Ensure conditions are satisfactory for installation. Arrange for rectification required.
Ensure tasks and activities comply with the Act, Regulation, Code of Practice or Australian Standards, as relevant.
Start of work means total acceptance of relevant conditions.

**302 Preparation**

A. Field measurements: do not delay job progress. Allow for adjustments and fitting of the work in the field where taking of measurements might cause delay.
B. Co-ordination with work of others: furnish to each relevant trade foreman anchorages and setting drawings, diagrams, templates and instructions for installation of items having integral anchors which are to be embedded in concrete or masonry construction. Co-ordinate delivery of such items to the project site.

**303 Inspection and Reinstatement**

Check each item, on arrival at the installation location, for damage. Replace damaged items.

**304 Installation**

A. Anchorage: except for anchorages furnished herein but placed by other trades, set and secure necessary anchorages, including concrete and masonry inserts, bolts, wood screws and other connectors as needed. Perform cutting, drilling and fitting as needed, locating anchorages and holes to ensure proper positioning of completed work.
B. Fit: during installation and assembly, form tight joints with exposed connections accurately fitted, and reveals uniform. Finish work accurately, plumb, level, square and true in reference to adjacent construction.
C. Comply fully with manufacturer's current written instructions.

**305 Field Quality Control**

Where considered necessary by the project manager, arrange for the manufacturer of products to instruct installers regarding correct installation.

**306 Protection**

Cover work: immediately following installation, wrap or cover the installations to avoid wear and tear of finish during subsequent construction.

**307 Cleaning**

Clean materials installed to the satisfaction of the project manager.
Remove temporary protective coatings.

**308 Completion**

Complete contracted work in accordance with contract documents and written variation orders issued by the project manager.

**END OF SECTION**

## PART I GENERAL

### 101 Scope

Design, supply and install complete shower and/or dressing compartment enclosures including but not limited to:
Frame, frameless glass.
Door, sliding, pivoted, frameless.
Glass, toughened, laminated, wired.
Installation devices.
Fixed panels, solid.

### 102 Related Work

Co-ordinate and co-operate with the following trades:

| | |
|---|---|
| Floor construction | Wall finishes |
| Wall framing | Plumbing fittings and fixtures |
| Floor finishes | Metal finishes |

### 103 Quality Assurance

Ensure that the chosen contractor is widely experienced in the class of work required by this specification. Provide details of similar work satisfactorily completed, including names and telephone numbers of those for whom the work was done so they can be contacted for references.

### 104 References

Comply with applicable portions of the following Australian Standards:

| | |
|---|---|
| AS 1231 2000 | Aluminium and aluminium coatings – Anodic oxidation coatings. |
| AS 1288 2006 | Glass in buildings - Selection and installation.<br>*Plus 1 Supplement, 2006 and 2 Amdts, 2008 - 2011.* |
| AS 1428 | Design for access and mobility.<br>1428.1 2009 General requirements for access – New building work.<br>*There are 5 other parts. 1992 – 2010.* |
| AS/NZS 2208 1996 | Safety glazing materials in buildings. *Plus 1 Amdt, 1999.* |
| AS 3715 2002 | Metal finishing - Thermoset powder coating for architectural applications of aluminium and aluminium alloys. |
| AS 3740 2010 | Waterproofing of domestic wet areas. *1 Amdt, 2012.* |
| HB 125 2007 | The glass and glazing handbook. |

### 105 Submissions

Provide to the project manager before ordering components:
Manufacturer's printed data on the specified products and installation instructions.

### 106 Delivery, Handling and Storage

Deliver all the materials to the site in totally satisfactory condition. Reduce storage of materials on site to a minimum.
Mark each component for easy identification. Provide security for materials not installed, from any loss or damage by weather or any other cause.
Do not install any damage component or panel. Remove and replace all such items.

### 107 Warranty

Provide to the project manager a written warranty stating that all components of the complete installation will remain intact and in a satisfactory condition for year(s) from the date of Practical Completion.

## PART II MATERIALS

### 201 Acceptable Manufacturers

### 202 Materials

A. Glass
Toughened: 10 mm thick
Wired: 10 mm thickness
Laminated: 10.38 mm thick clear interlayer

B. Metal frame
Material: aluminium alloy 6063, Temper T5 or T6
Finish: anodising/polyester powder coat. Refer Clause 205

C. Metal fastenings, clips etc.
Stainless Steel:
Finish:
Chrome plated brass:
Finish of chrome:
Other:

D. Solid panels and doors

Material: Colour:

**203 Detail Design Provisions**

A. General: the project manager's drawings are to be considered essentially schematic except for profiles of exposed surfaces and panel arrangement where indicated. If, in the opinion of the builder a change of profile is required in order to meet the specification, arrange through the project manager for a review of the condition. Design the assembly, reinforcing and anchorage to suit each specified condition in an acceptable manner complying with the requirements specified herein.

B. Tolerances: design frames to accommodate building tolerances, and when completed, within the following tolerances:

1. Deviation from plumb, level or dimensioned angle within 3mm per 3.5m of length of member, or 6mm in total run in line.
2. Deviation from theoretical position on plan or elevation, including deviation from plumb, level or dimensioned angle not to exceed 9mm total at location.
3. Change in deviation not to exceed 3mm for 3.5m run in direction.

**204 Finish**

Anodising or polyester powder coat.
Anodising:
Metal windows, doors anodised to selected colour.
Pre-treat and apply anodising by applicators approved by the project manager.
Minimum coating thickness of 25 microns subjected to random testing after installation. Remove and replace non-conforming material.
Comply with requirements of AS 1231.
Polyester powder coat:
Polyester powder coated, to colour approved by the project manager and by the manufacturer of the powder material, to metal of windows, doors.
Perform pre-treatment and application of powder coating by applicators approved by the project manager and by the manufacturer of the powder material.
Minimum coating thickness of 50 microns subjected to random testing after installation. Non-conforming material will be removed and made good by the builder.
Comply with requirements of AS 3715.

**205 Sealants and Accessory Materials**

A. Provide non-structural external weatherproofing sealants of low modulus neutral curing silicone rubber compounds by approved manufacture.

B. Generally comply with AS 1288. Supply spacer gaskets, glazing tapes and setting blocks compatible with sealants, which do not contribute to sealant colour change or affect the sealants adhesion to substrates when exposed to ultraviolet light.
Prior to application, evaluate samples of materials receiving the silicone, including elastomeric sealants, by the silicone sealant manufacturer for compatibility and primer selection. Clearly identify the submitted materials as to manufacturer and product number.
Silicone sealants generally are to be clear in colour.

C. Interior sealers: acrylic-emulsion or latex-rubber-modified acrylic emulsion sealant compound, permanently flexible, non-staining and non-bleeding; recommended by manufacturer for protected exterior exposure and general interior exposure.

D. Joint primer/sealer: provide type of joint primer/sealer as recommended by sealant manufacturer to suit each surface.

E. Bond breaker tape: polyethylene tape or other plastic as recommended by sealant manufacturer to be applied to sealant-contact surfaces where bond to substrate or joint filler is to be avoided for proper performance of sealant. Provide self-adhesive tape where applicable.

F. Sealant backer rod: compressible rod stock of polyethylene foam, polyethylene jacketed polyurethane foam, butyl rubber foam, neoprene foam or other flexible permanent, durable non-absorbent material as recommended by sealant manufacturer for compatibility with sealant.

G. Glazing tape: polyisobutylene tape of type, thickness and width as recommended by glass manufacturer and project manager.

H. Exposed screws: countersunk type, anodised aluminium or non-magnetic stainless steel evenly and neatly located in an approved manner. Exposed fasteners: finished to match aluminium.

**206 Fabrication**

Framing system: fabricate from extrusions to profiles shown on approved Shop Drawings.
Form junctions so that no fixings, such as pins, screws, pressure indentations and the like are visible on exposed faces. Show fixings which will be exposed, on Shop Drawings.
Cut edges, drill holes, rivet joints and clean flat sheets, neat, free from burrs and indentations. Remove sharp edges without excessive deformation. Fit mitred joints accurately to a fine hairline.
Pre-assemble and match mark before delivery.

## PART III EXECUTION

**301 Examination**

Inspect site conditions before start of work on site, before delivery of materials. Ensure conditions are satisfactory for installation.
Ensure tasks and activities comply with the Act, Regulation, Code of Practice or Australian Standards, as relevant.
Perform rectification required before delivery of materials.
Start of work means total acceptance of conditions.

**302 Preparation**

Prepare surfaces affected by the installation in accordance with material manufacturer's instructions.

**303 Frame Anchorage**

Fabricator is required to supply the anchorage devices to the builder for building in by others and check that devices are located as required.

**304 Glazing**

Secure glass in accordance with glass manufacturer's recommendations and AS 1288. Allow for thermal expansion of glass, the metal framing and spandrels.

**305 Preparation for Sealants**

Joint preparation sealants: clean joint surfaces immediately before installation of sealant or caulking compound. Remove dirt, insecure coatings, moisture and other substances which could interfere with bond of sealant or caulking compound.

**306 Installation General**

Comply throughout with the current written instructions of the system manufacturer.

**307 Installation of Sealants**

A. Install bond breaker tape where required by manufacturer's recommendations to ensure that elastomeric sealants will perform properly.
B. Employ only proven installation techniques, which will ensure that sealants are deposited in uniform continuous ribbons without gaps or air pockets, with complete "wetting" of joint bond surfaces equally on opposite sides. Except as otherwise indicated, fill sealant rabbet to a slightly concave surface slightly below adjoining surfaces.
C. Install sealant to depths as recommended by sealant manufacturer.
D. Remove excess caulking compound and sealant and leave surfaces neat, smooth and clean, without smears on surrounding work. Tool joints where recommended by manufacturer or where required. Remove cartons and debris from site as the work progresses.

**308 Protection**

A. Framing system: protect metal surfaces as necessary during erection. Finish surfaces free from mechanical imperfections such as scratches, scrapes, dents, spots, stains and streaks.
B. Glass: protect glass from breakage immediately upon installation and until Practical Completion. Remove and replace glass and metal panels which are broken, cracked, abraded, chipped or damaged in other ways, before, during or after installation, at no additional cost to proprietor.
C. Be responsible for breakage and damage to installation until Practical Completion.

**309 Cleaning**

A. Remove labels, excess glazing compounds, stains, spots and other foreign matter from glass, frames, hardware and other finished surfaces immediately upon installation of glazing for each light.
B. Debris: remove rubbish and debris resulting from glazing operations, each day.

**310 Completion**

Complete contracted work in accordance with contract documents and written variation orders issued by the project manager.

**END OF SECTION**

## PART I GENERAL

### 101 Scope

Design, fabricate, supply and install grilles and screens including but not limited to:
Wall mounted grilles for ventilation and other purposes
External grilles.
Internal grilles.
Floor grilles.
Ceiling grilles.
Freestanding screens.
Hinged screens.
Sliding screens.

### 102 Related Work

Co-ordinate and co-operate with the following trades:

| | |
|---|---|
| Floor construction | Metalwork |
| Wall construction | Metal windows and glazing |
| Ceiling construction | Metal finishing |
| Concrete | Painting |
| Carpentry | |

### 103 Quality Assurance

Work of this trade section is to be performed by experienced craftsmen familiar with the quality required in this class of work.
Where 5 or more items of a similar product are required, construct a prototype, full size. Finish the prototype in every respect. When approved by the project manager, this sample remains part of the work and becomes the standard for the remaining work.

### 104 References

Comply with applicable portions of the following Australian Standards:

| | |
|---|---|
| AS 1428 | Design for access and mobility.<br>1428.1 2009 General requirements for access – New building work.<br>*There are 5 other parts. 1992 – 2010.* |
| AS/NZS 1554 | Structural steel welding. *There are 7 parts, 1994 – 2012.* |
| AS 1627 | Metal finishing - Preparation and pretreatment of surfaces.<br>1627.6 2003 Chemical conversion treatment of metals.<br>*There are 6 other parts, 1997 – 2005.* |
| AS 4100 1998 | Steel structures *Plus 1 Supplement, 1999, 1 Amdt 2012.* |
| AS/NZS 4680 2006 | Hot-dip galvanized (zinc) coatings on fabricated ferrous articles. |
| AS 5039 2008 | Security screen doors and security window grilles. |
| AS 5040 2003 | Installation of security screen doors and window grilles. *Plus 1 Amdt, 2007.* |

Comply with requirements of statutory and local authorities.

### 105 Shop Drawings

Comply with DOCUMENT 00800 SUPPLEMENTARY CONDITIONS OF CONTRACT, clause 27.
Provide Shop Drawings for major items supplied hereunder.

A. Contract drawings and details provided are indicative as to general and minimum requirements, and do not show conditions.
B. Develop details not shown and in conformity with the indicative details shown.
C. Take and confirm dimensions on site, before preparing Shop Drawings where possible.
D. Submit detailed Shop Drawings for fabrication and installation of major metalwork. Show plans, elevations and detailed sections; indicate materials, finishes, types of joinery, fasteners, anchorages and accessory items. Provide setting diagrams and full- scale templates of blocking, anchorages, sleeves and bolts installed by others.

### 106 Samples

A. Sample welds: if requested, provide samples of weld types, including samples of railings joined at right angles and at typical acute angles, welded and ground smooth, for approval. If not acceptable, provide additional samples until approved. When approved, samples are to establish quality of similar work of this trade section.
B. Check on delivery: request project manager to check materials on delivery to site for quality, and he will reject materials not meeting the requirements of this specification or equal to approved samples. Rejected materials are to be returned to the fabricator at the fabricator's expense.
C. Finish: provide samples of specified finishes when requested.

## PART II MATERIALS

### 201 Manufacturers

### 202 Materials

| Manufacturer | Item | Model no. | Material | Finish | Size(s) |
|---|---|---|---|---|---|
| | | | | | |
| | | | | | |

### 203 Welding Steel

General: details of joints, the techniques of welding employed, the appearance and quality of welds made and the methods used to correct defective work; conform to requirements of AS/NZS 1554.
Welds exposed to view: grind smooth to project manager's approval.
Concealed welds: grind smooth before galvanising.
Tack or skip welding: at regular intervals, very neat; not permitted if material is to be hot dip galvanised.
Remove weld spatter.
Certification: welds are to be made only by welders who certified in accordance with the Australian Standard.
Tack welding or skip welding will NOT be permitted where items are to be galvanised. Weld continuously form joints and connections to exclude water and to permit draining during galvanising.

### 204 Connection Design

General: design fabricated items so that possible work is done before delivery. Fully protect for shipment. Take possible care to prevent damage.

A. Welding external items: conform to the recommendations of AS/NZS 1554, noting particularly the design criteria.
B. Flanges: concealed where possible. Sleeve connecting railings inside railing sections and secure with flush or set screws. Except where access is impossible, connection screws and bolts are to be on the underside of joints.
C. Fasteners on the top of railing sections will not be permitted.
D. Shop connections for steel fabrications are to be welded, and field connections bolted.
E. Provide smooth finishes to exposed surfaces with sharp well-defined lines and arrises. Machined joints are to be milled to a close fit. Design necessary lugs, brackets and similar items so that work can be assembled and installed in a neat, substantial manner.
F. Provide ample strength and stiffness by using appropriate metal thickness of assembly and supports.
G. Provide holes and connections as required to accommodate the work of other trades and for site assembly of metalwork. Drill or punch and ream in the shop.

### 205 Miscellaneous

Fasteners: provide required bolts, screws, inserts, fasteners, templates and other accessories required for a complete installation.
Co-ordinate with other trades as to the proper fastening systems suitable for the substrates to which the item is to be secured. Refer to project manager if in doubt.
Fasten galvanised items with galvanised fasteners.

## PART III EXECUTION

### 301 Examination

Inspect site conditions before fabrication, where possible, and before delivery of materials. Ensure conditions are satisfactory for installation. Arrange for rectification required.
Ensure tasks and activities comply with the Act, Regulation, Code of Practice or Australian Standards, as relevant.
Start of work means total acceptance of relevant conditions.

### 302 Preparation

A. Field measurements: do not delay job progress. Allow for adjustments and fitting of the work in the field where taking of measurements might cause delay.
B. Co-ordination with work of others: furnish to each relevant trade foreman anchorages and setting drawings, diagrams, templates and instructions for installation of items having integral anchors which are to be embedded in concrete or masonry construction. Co-ordinate delivery of such items to the project site.

### 303 Inspection and Reinstatement

A. Check fabrications as they are unloaded at the project site for evidence of physical damage. Damaged fabrications are to be treated as follows:
   1. Damage through galvanising: perform immediate inorganic zinc silicate paint or cold-galvanising repair. Do not install until reinstated.
   2. Architectural metalwork: returned to shop for repair or replacement.

B. Verify anchors, bolts and other required anchorage items for proper size and accurate location prior to erection.

**304 Installation**

A. Anchorage: except for anchorages furnished herein but placed by other trades, set and secure necessary anchorages, including concrete and masonry inserts, bolts, wood screws and other connectors as needed. Perform cutting, drilling and fitting as needed, locating anchorages and holes to ensure proper positioning of completed work.

B. Fit: during installation and assembly, form tight joints with exposed connections accurately fitted, and reveals uniform. Finish work accurately, plumb, level, square and true in reference to adjacent construction. Make tolerances conform to Australian Standards.

C. Finish: do not cut or abrade shop finishes which cannot be completely restored in the field.
The use of gas-cutting torch in the field for correcting fabrication errors will not be permitted under conditions. Fabrications may be cut shorter with power hacksaws on site.
Isolate dissimilar metals likely to be subject to moisture with inert materials, not visible on completion of installation.

**305 Field Quality Control**

Where considered necessary by the project manager, arrange for the manufacturer of products to instruct installers regarding correct installation.

**306 Protection**

Cover work: immediately following installation, wrap or cover architectural metalwork to avoid wear and tear of finish during subsequent construction.

**307 Cleaning**

Clean materials installed to the satisfaction of the project manager.
Remove temporary protective coatings.

**308 Completion**

Complete contracted work in accordance with contract documents and written variation orders issued by the project manager.

**END OF SECTION**

## PART I GENERAL

**101 Scope**

The work of this trade section includes but is not limited to the identification of apertures in the structure and the means of permanently closing apertures which could allow entry of pests, e.g., non-human life forms.

**102 Related Work**

Co-ordinate and co-operate with the following trades:

| | |
|---|---|
| Site preparation – excavation | Roof materials and installation |
| Plumber, hot and cold water | Doors external |
| Piper energy distribution | Windows |
| Concrete trades | Flooring materials |
| Carpentry | Air conditioning |
| Wall construction | Electrical |
| Fibre cement products | Structural framing |
| Termite control | |

**103 Quality Assurance**

Where specialist sub-contractors are employed, such tradespeople are required to show evidence of experience and skills which meet the requirements of the project.
Compliant to local authority or statutory requirements (i.e. fire ant Queensland)

**104 References**

Comply with requirements of statutory and local authorities having jurisdiction.

**105 Submissions**

Before ordering specific materials, submit product data to the project manager.
Evidence of payment of relevant fees where applicable.

**106 Warranty**

Provide to the proprietor warranties offered by suppliers and/or installers.

## PART II MATERIALS200

**201 Acceptable Manufacturers**

**202 Materials**

Floor: concrete
- Timber

Walls: block
- Brick
- Timber
- Steel frame
- Fibre cement
- Other

Roof: tile
- Metal

Window surround
Door surround
Eaves
Vents: wall
Vents: eaves
Mesh
OTHER

## PART III EXECUTION

**301 Examination**

Visit site and inspect conditions, comparing conditions to the drawings before delivery of materials to site.
Obtain essential services information (dial before you dig).
Rectify any discrepancy or unsuitability of substrata.
Start of work means total acceptance of conditions.

**302 Co-ordination**

Arrange for co-operation of other trades to ensure effective pest control. Take care of materials. Prevent damage before and during installation.

**303 Preparation**

Co-ordinate with and ensure preparatory work by other trades is done prior to commencement of work and arrange for provision and fixing grounds. Include framing and provision for services.
Ensure tasks and activities comply with the Act, Regulation, Code of Practice or Australian Standards, as relevant.

**304 Installation**

Anchor and fasten materials and components to comply with ratings and performance requirements, and to comply with governing local regulations. Comply with appropriate Australian Standard.
Take care of and protect surrounding work, including other finishes, equipment and components, during installation. Provide protective covering where necessary.

**305 Installation Particulars**

Comply in all respects with manufacturer’s recommendations contained in technical bulletins. Call for technical advice where necessary. Refer clause 104.

**306 Finishing Details**

Finish joints and secure fasteners to details indicated. Where no specific details exist, adopt details and recommendations set out in published bulletins by the supplier complying in every respect. Remove surface defects to achieve uniform appearance of each type of installation.

**307 Protection**

Protect finished work. Make good damage at no additional cost to the proprietor.

**308 Cleaning**

Clean exposed surfaces including trim, edge moldings, and comply with manufacturer's instructions for cleaning and touch-up of minor finish damage.
Remove spatterings, droppings and surplus material.

**309 Completion**

Complete contracted work in accordance with contract documents and written variation orders issued by the project manager.

**END OF SECTION**

## PART I GENERAL

**101 Scope**

Design, supply and install required items including but not limited to:
Directory panel
Bulletin boards
Panels
Metal frames
Dimensional letters
Exterior/interior signs
Illuminated, non-illuminated
Plaques
Door signs
Signs for the disabled.

**102 Related Work**

Co-ordinate and co-operate with the following trades:

| | |
|---|---|
| Wall construction | Concrete |
| Floor construction | Finishes |
| Tactile warning surfaces | |

**103 Quality Assurance**

Materials, shop fabrication and on-site installation are to be supplied and performed by fully trained and experienced tradesmen in accordance with instructions of the manufacturer.

**104 References**

Comply with the applicable portions of the following Australian Standards:

| | |
|---|---|
| AS 1319 1994 | Safety signs for the occupational environment. |
| HB 123 1999 | Guidelines for the selection, location and installation of visual warning devices in buildings. |

**105 System Description**

The specified materials and systems are intended to provide a uniform image throughout the building. Where possible, materials are to be provided by the same manufacturer.

**106 Submissions**

Submit to the project manager for approval, the following before ordering materials:

A. Samples of specified materials, conforming to type and finish required.
B. Fully detailed drawings showing overall dimensions and component sizes with proposed methods of fixing and/or securing position.
C. Check data on sign for data accuracy - spelling , phone number, etc. before manufacture.
D. Copies of minutes of pre-installation conference.

**107 Delivery, Handling and Storage**

Deliver materials in accordance with the Project Schedules.
Prevent damage to materials by securely boxing or wrapping before delivery. Take care with materials during delivery and handling.
Store materials on site where directed by builder. Where possible install directly in place.

**108 Warranty**

Provide to the proprietor a warranty co-signed by the manufacturer and installer stating that items in this specification will remain in full operational condition for a period of years from the date of Practical Completion.

**109 Maintenance**

Provide a written undertaking to the proprietor that parts of the installation will be available for additional supply from time to time to suit the proprietor's needs for a period of 10 years from the date of Practical Completion.

## PART II MATERIALS

**201 Acceptable Manufacturers**

**202 Materials**

**203 Finishes**

**204 Signs for The Disabled**

**205 Fabrication**

Fabricate components in accordance with manufacturer's instructions and approved drawings.
Form junctions so that fixings are concealed.
Cut edges, drill holes free from burrs and indentations. Fit joints to a fine hairline.
Pre-assemble where possible or practical and mark each item for intended location before delivery.

## PART III EXECUTION

**301 Examination**

Visit site and inspect conditions, comparing conditions to drawings before delivery of materials to site. Rectify discrepancy or unsuitability of substrate.
Ensure tasks and activities comply with the Act, Regulation, Code of Practice or Australian Standards, as relevant.
Start of work means total acceptance of conditions.
Space enclosure: do not install materials until space is enclosed and weatherproof, and until wet-work in space is completed and nominally dry.

**302 Preparation**

Prepare areas and surfaces before installation, so that best conditions exist.
Where necessary, ensure that lighting cable is in place and concealed ready for connection to light fittings within the illuminated items.

**303 Installation**

Comply with manufacturer's written instructions. Provide appropriate anchoring devices, concrete pads for external signs.
Take care of and protect adjacent surfaces and materials. Provide protective cover to adjacent finishes where necessary.

**304 Protection**

Protect finished work.
Replace or make good work found damaged at time of Practical Completion.

**305 Cleaning**

A. Adjust and clean: clean exposed surfaces including trim, edge moldings, and comply with manufacturer's instructions for cleaning and touch-up of minor finish damage. Remove and replace work which cannot be successfully cleaned and repaired to permanently eliminate evidence of damage.
B. Remove spatterings and droppings from work. Remove daily surplus materials and rubbish from the work area.
C. Leave floors broom clean at completion.

**306 Completion**

Complete contracted work in accordance with contract documents and written variation orders issued by the project manager.

**END OF SECTION**

## PART I GENERAL

**101 Scope**
Supply and install extinguishers where indicated in accordance with the statutory authority having jurisdiction.

**102 Related Work**
Co-ordinate and co-operate with the following trades:
Wall construction
Wall finishes

**103 Quality Assurance**
Perform work of this trade section with experienced tradesmen familiar with the quality of work required and licensed by the manufacturers of the extinguishers. Comply throughout with written instructions.

**104 References**
Comply with applicable portion of the following Australian Standards:

| | |
|---|---|
| AS 1603 | Automatic fire detection and alarm systems. *There are 12 parts 1996 – 2011 and 4 Amdts, 1998 – 2001.* |
| AS 1670 | Fire detection, warning, control and intercom systems - System design, installation and commissioning. *There are 5 parts, 1997 – 2004, plus 1 Amdt, 2005.* |
| AS/NZS 1841 2007 | Portable fire extinguishers. *There are 8 parts, one for each type.* |
| AS 2444 2001 | Portable fire extinguishers and fire blankets – Selection and location. |
| AS/NZS 4353 1995 | Portable fire extinguishers - Aerosol type. |

Comply with requirements of statutory authority having jurisdiction.

**105 Submissions**
Copies of minutes of pre-installation conference.

## PART II MATERIALS

**201 Manufacturers**
Manufacturers of materials approved in writing by the statutory authority may supply equipment.

**202 Materials**
Supply and install extinguishers authorised by the authority in accordance with the schedule provided by the authority.

**203 Installation Devices**
Supply brackets signs and other required items, and the means of securing them to the building.

## PART III EXECUTION

**301 Examination**
Inspect site conditions before fabrication, where possible, and before delivery of materials. Ensure conditions are satisfactory for installation. Arrange for rectification if required.
Ensure tasks and activities comply with the Act, Regulation, Code of Practice or Australian Standards, as relevant.
Start of work means total acceptance of relevant conditions.

**302 Inspection on Arrival at Site**
Inspect materials on arrival, comparing each item to the schedule provided. Ensure that no material is damaged. Return to the manufacturer damaged items and obtain a replacement.

**303 Installation**
Anchorage: except for anchorages furnished herein but placed by other trades, set and secure necessary anchorages, including concrete and masonry inserts, bolts, wood screws and other connectors as needed.
Perform cutting, drilling and fitting as needed, locating anchorages and holes to ensure proper positioning of completed work.

**304 Cleaning**
Clean materials installed to the satisfaction of the project manager.
Remove temporary protective coatings.

**305 Completion**

Complete contracted work in accordance with contract documents and written variation orders issued by the project manager.

**END OF SECTION**

## PART I GENERAL

### 101 Scope

Design, supply and install demountable partitions and related work as indicated, including but not limited to:
Standard modular (1200mm/other) panels, full height and/or door height solid, part glazed, fully glazed
Closer/infill panels, full height and/or door height solid, etc.
Door panels, including doors, full height and/or door height solid, etc.
Door hardware and furniture.
Floor, ceiling and wall fixing channels and skirtings.
Reticulation provisions, both horizontal and vertical, for electricity, telephone and communications.
Alteration to ceilings.
Alteration to carpets.
Alteration to sprinkler head locations.

### 102 Related Work

A. Co-ordinate and co-operate with installers of walls, floors, ceilings.
B. Schedule of Rates
Complete the following schedule of rates for fully installed partitions and submit it with the tender:

| Partition Type | Description | $ Price per metre |
|---|---|---|
| A. | Full height, solid | |
| B. | Full height, glazed above door head | |
| C | | |

### 103 Quality Assurance

Prototype:
In a location selected by the project manager, construct a complete prototype installation consisting of:
Full height section complete with an infill panel at a fixed wall, a door unit and door, etc.
Include all elements listed above, finished in every respect. The prototype, when approved, is to remain as part of the work and become the control standard for the balance.

### 104 References

Comply with applicable portions of the following Australian Standards:

| | |
|---|---|
| AS 1191 2002 | Acoustics - Method for laboratory measurement of airborne sound transmission insulation of building elements. |
| AS/NZS 1276.1 1999 | (Available Superseded) Acoustics – rating of sound insulation in buildings and of building elements – Airborne sound insulation. |
| AS 1288 2006 | Glass in buildings - Selection and installation. *Plus 1 Supplement, 2006 and 2 Amdts, 2008 - 2011.* |
| AS/NZS 2208 1996 | Safety glazing materials in buildings. *Plus 1 Amdt 1999.* |

### 105 Submissions

Submissions required prior to delivery:
e.g. evidence of required acoustic properties of the completed partitions.

### 106 Delivery, Handling and Storage

Where possible, deliver materials for direct installation, keeping on-site storage to a minimum. Be responsible for loss and damage to materials whether stockpiled or in place.

## PART II MATERIALS

### 201 Approved Manufacturer

### 202 Panels

A. Fabricate off site to a finished thickness of (45mm/other), with no mullions or faces of panels flush with mullions. Provide for vertical and horizontal reticulation of electrical and telephone services throughout the whole partition system.
Make panel and door modules capable of being individually interchanged
B. Construction:
45mm solid core, plasterboard each side of timber frame or approved equivalent, veneered with (slice cut ash/other), or surfaced with fabric:
Timber frame at 400mm maximum centres faced with 13mm square edge plasterboard bonded to the frame under pressure or
Sound transmission class (STC rating) required.
C. Finish:

Before delivery, stain to a selected colour and finish with one coat sealer and two coats of satin glaze. Sand and fine sand between coats to provide a smooth satin finish or unbacked vinyl bonded under pressure:
Other:

**203 Glass**
Clear float, laminated or selected obscure glass as indicated.
Thickness in accordance with AS 1288.
Glaze in PVC gaskets finishing flush with the aluminium extrusions.
For glass and sealant particulars, refer trade section 08800, GLASS AND GLAZING.

**204 Floor channels**
Extruded aluminium, folded or roll-formed sheet steel or other channel designed with other parts of the system, to provide adjustments to accommodate normal building inaccuracies while providing plumb partitions with sills, heads and the like level and aligned.

**205 Mullions and Seals**
Extruded aluminium (natural anodised/powder coated a selected colour)
At door jamb mullions, provide acoustic seals: .

**206 Wall and Ceiling Channels**
Extruded aluminium fixed to walls and ceilings. Finish as for mullions.
Seal against fixed walls with silicone rubber.

**207 Skirting**
(90/100)mm high (extruded aluminium, steel or vinyl) held without visible fixings and no adhesive so as to allow access for electrical and power reticulation. Finish as for mullions.

**208 Doors**
45mm solid core or equal approved, veneered and finished to match the panels. Vertical edges stripped with 10mm matching solid timber.
45mm semi-solid sheeted to match the (vinyl/other) panels. Vertical edges stripped with 10mm solid timber finished as for timber veneer.
Other:

**209 Door Hardware**
Refer Door Schedule.
Supply and fix door hardware listed in the attached Door Schedule.
Allow for and provide the described master key system plus liaison with the supplier needed to produce the key compatibility designed for the whole project.

**210 Acoustic Partitions**
In the location shown, provide partitions with an appearance similar to those in the rest of the job but with such additional treatment as is required to give them ASTM Transmission Class (35/40/45/50/other) sound insulation properties.

**211 Acoustic Barriers**
Where acoustic partitions are fitted against suspended ceilings, provide and fix barriers along the lines of the partitions and between the ceiling and the underside of the floor slab above. The barriers are to have sound insulation properties at least as high as the partitions.
Provide evidence, from a laboratory NATA registered for the tests, that the proposed partition system (together with the barriers above the suspended ceiling) has the required sound insulation properties.

## PART III EXECUTION

**301 Examination**
Visit the site, inspect the conditions and compare them with the drawings.
Ensure tasks and activities comply with the Act, Regulation, Code of Practice or Australian Standards, as relevant.
Start of work means total acceptance of conditions.

**302 Protection**
Provide polythene or building paper and cover installed carpets.
Protect other surrounding work, including other finishes, equipment and components.

**303 Erection**
Erect the complete partition system in accordance with the agreed layout, design, installation technique and construction schedule.
Seal at ends of partitions against walls, windows etc. with material matching the partition. Thoroughly secure in place.

**304 Field Acoustic Tests**

Allow for on site testing, by a laboratory NATA registered for the tests, to demonstrate in (one/two/three/other) separate locations, nominated by the project manager, that the required sound reduction through acoustic partitions (and the barriers above them) has been achieved.

**305 Inspection**

Attend the job as needed and meet with the project manager on site when requested.
Before handing over, ensure that the whole installation is in complete working order.

**306 Cleaning**

Remove protection membranes and materials.
Clean surfaces exposed to view, replacing parts or components that are damaged or cannot be cleared.

**307 Completion**

Complete contracted work in accordance with contract documents and written variation orders issued by the project manager.

**END OF SECTION**

## PART I GENERAL

**101 Scope**

Design, supply and install operable walls and related work as indicated, including but not limited to:
Standard modular (1220mm/other) panels, full height and/or door height.
Acoustic, Non acoustic.
Overhead track, acoustic seals.
Jambs, stacking pockets.
Door hardware and furniture.
Alteration to ceilings.
Alteration to carpets.
Alteration to sprinkler head locations.

**102 Related Work**

Co-ordinate and co-operate with the following trades:
Steel studs
Plasterboard
Other:

**103 Quality Assurance**

Employ only tradespeople and technicians widely experienced in this class of work, licensed by the supplier.

**104 References**

Comply with applicable portions of the following Australian Standards:

| | |
|---|---|
| AS 1191 2002 | Acoustics - Method for laboratory measurements of airborne sound transmission insulation of elements. |
| AS/NZS 1276.1 1999 | (Available Superseded) Acoustics - Rating of sound insulation in buildings and of building elements – Airborne sound insulation. |

**105 Submissions**

Submissions required prior to delivery:
e.g. evidence of required acoustic properties of the completed partitions. Data sheets of supplier's instructions and materials to be supplied.

**106 Delivery, Handling and Storage**

Where possible, deliver materials for direct installation, keeping on-site storage to a minimum. Be responsible for loss and damage to materials whether stockpiled or in place.

**107 Warranty**

Provide to the proprietor a warranty, counter-signed by the installer, on the whole of the installation, which states that work will remain fully operational for the period of year(s) after date of Practical Completion.

## PART II MATERIALS

**201 Approved Manufacturer**

**202 Panels**

Fabricate off site to a nominal thickness of ( mm), constructed on a maximum module of 1220mm with each panel supported by own carrier system of four (4) ball bearing nylon wheels.
Provide panel face laminated to appropriate acoustic and structural backing.

**203 Jambs**

Extruded aluminium, adjustable to compensate for plumb alignment.

**204 Acoustic Seals**

Provide mechanical pressure seals at head and foot of panels and pass door. Provide vertical seals of resilient gaskets set between extruded aluminium stiles.

**205 Suspension Channels**

Provide overhead suspension track of extruded aluminium.

**206 Finish**

Provide all exposed aluminium in natural and/or colour anodised finish.

**207 Pass Doors**

Full height pass door panel fitted with lever action door furniture finished to match the other panels.

**208 Door Hardware**

Refer Door Schedule.
Supply and fix door hardware listed in the attached Door Schedule.

**209 Acoustic Barriers**

Where acoustic operable walls are fitted against suspended ceilings, provide barriers along the lines of the walls and between the ceiling and the underside of the floor or roof above. Provide the barriers with sound insulation properties at least as high as the operable walls.
Provide evidence, from a laboratory NATA registered for the tests, that the proposed operable wall (together with the barriers above the suspended ceiling) has the required sound insulation properties.

## PART III EXECUTION

**301 Examination**

Visit the site, inspect the conditions and compare them with the drawings.
Ensure tasks and activities comply with the Act, Regulation, Code of Practice or Australian Standards, as relevant.
Start of work means total acceptance of conditions.

**302 Protection**

Provide polythene or building paper and cover installed carpets.
Protect other surrounding work, including other finishes, equipment and components.

**303 Erection**

Erect the complete operable wall system in accordance with the agreed layout, design, installation technique and construction schedule. Install barriers above ceiling where required.
Secure overhead track with steel cleats of manufacturers design fixed to overhead structural support. Level during installation. Plumb jambs to suit alignment.

**304 Field Acoustic Tests**

Allow for on site testing, by a laboratory NATA registered for the tests, to demonstrate in (one/two/three/other) separate locations, nominated by the project manager, that the required sound reduction through acoustic panels (and the barriers above them) has been achieved.

**305 Inspection**

Attend the job as needed and meet with the project manager on site when requested.
Before handing over, ensure that the whole installation is in complete working order.

**306 Completion**

Complete contracted work in accordance with contract documents and written variation orders issued by the project manager.

**END OF SECTION**

## PART I GENERAL

### 101 Scope

Design, fabricate, supply and install exterior sun control devices for openings formed by doors and windows, including but not limited to:

| | |
|---|---|
| Metal sheet | Metal shutter |
| Metal perforated sheet | Roller shutter |
| Fibre cement sheet | Frames |
| Wood Panel | Support systems |
| Wood shutter | Other: |

### 102 Related Work

Co-ordinate and co-operate with the following other trades:

| | |
|---|---|
| Wall construction | Door installation |
| Wall finishing treatment | Metal finishes |
| Window installation | Painting |
| Metalwork | |

### 103 Quality Assurance

A. Manufacturer Qualifications: not less than five (5) years continuous experience in the manufacture of the product types specified.

B. Installer Qualifications: installer is not to have less than three (3) years continuous experience in the erection of specified material.

### 104 References

Comply with applicable portions of the following Australian Standards:

| | |
|---|---|
| AS 1231 2000 | Aluminium and aluminium coatings – Anodic oxidation coatings. |
| AS/NZS 1554 | Structural steel welding. *There are 7 parts, 1994 – 2012.* |
| AS 3715 2002 | Metal finishing - Thermoset powder coating for architectural applications of aluminium and aluminium alloys. |
| AS/NZS 4791 2006 | Hot-dip galvanised (zinc) coatings on ferrous open sections, applied by an in-line process. |
| AS/NZS 4792 2006 | Hot-dip galvanized (zinc) coatings on ferrous hollow sections, applied by a continuous or a specialized process. |

Comply with relevant authority's requirement for fire-rated installation, plus the Building Code of Australia.

### 105 Submissions Required Prior to Fabrication

A. Complete system description including the following information:
Names of manufacturers of products.
Names, addresses and telephone numbers of local representatives for products.
Types, model numbers and names of products, and indication whether products are "off the shelf" or custom fabricated. Include specific information on finishes - thicknesses, patented process name, process description and test data.
Detailed information on products manufactured specifically for this project.
Detailed system description including standard details and manufacturer's literature; and large-scale details of specially fabricated products.

B. Statement that the proposed system meet(s) the regulatory requirements, thermal, aesthetic and waterproofing criteria and wind loading, construction, glazing and warranty requirements specified; noting in detail exceptions.

C. Shop drawings: refer DOCUMENT 00800, clause 27. Provide shop drawings showing the following information where appropriate to the items:
1. Layout (sectional plan and elevation of complete assembly).
2. Full size section of members.
3. Methods of assembly, type and location of exposed screws.
4. Methods of glazing.
5. Methods of installation, including fixings, anchorage, caulking, flashings.
6. Provision for expansion (thermal).
7. Junctions and trim to adjoining surfaces. Fittings and accessories.

D. Engineer's calculations on wind loading.

E. Sealants: submit manufacturer's product specifications, handling, installation/curing instructions, and performance tested data sheets for each elastomeric product required. Submit certificate test reports for elastomeric sealants on aged performance as specified, including hardness, stain resistance, adhesion, cohesion or tensile strength, elongation, low-temperature flexibility, compression set, modulus of elasticity, water absorption, and resistance (ageing, weight loss, deterioration) and heat and exposure to ozone and ultraviolet light.

### 106 Delivery, Handling and Storage

Handle materials with care. Do not store on site. Install directly in place. Store sealants as instructed.

**107 Warranty**

Provide to the proprietor a warranty, counter-signed by the installer, on the whole of the installation, which states that work will remain intact, waterproof and fully operational for the period of … years after date of installation.

## PART II MATERIALS

**201 Acceptable Manufacturers**

**202 Materials**

| Item | Thickness | Manufacturer | Material | Model | Number | Finish | Size |
|---|---|---|---|---|---|---|---|
| | | | | | | | |
| | | | | | | | |
| | | | | | | | |

**203 Welding Steel**

General: details of joints, the techniques of welding employed, the appearance and quality of welds made and the methods used to correct defective work; conform to requirements of AS/NZS 1554.
Welds exposed to view: grind smooth to project manager's approval.
Concealed welds: grind smooth before galvanising.
Tack or skip welding: at regular intervals, very neat; not permitted if material is to be hot dip galvanised.
Remove weld spatter.
Certification: welds are to be made only by certified welders who have previously been qualified in accordance with Australian Standards.
Tack welding or skip welding will NOT be permitted where items are to be galvanised. Weld continuously form joints and connections to exclude water and to permit draining during galvanising.

**204 Connection Design**

General: design fabricated items so that possible work is done before delivery. Fully protect for shipment. Take possible care to prevent damage.

A. Welding External Items: conform to the recommendations of AS/NZS 1554, noting particularly the design criteria.
B. Flanges: concealed where possible. Sleeve connecting railings inside railing sections and secure with flush or set screws. Except where access is impossible, connection screws and bolts are to be on the underside of joints.
C. Fasteners on the top of railing sections will not be permitted.
D. Weld shop connections for steel fabrications, and bolt field connections.
E. Provide smooth finishes to exposed surfaces with sharp well-defined lines and arrises. Mill machined joints to a close fit. Design necessary lugs, brackets and similar items so that work can be assembled and installed in a neat, substantial manner.
F. Provide ample strength and stiffness by using appropriate metal thickness of assembly and supports.
G. Provide holes and connections as required to accommodate the work of other trades and for site assembly of metalwork. Drill or punch and ream in the shop.

**205 Miscellaneous**

Fasteners: provide required bolts, screws, inserts, fasteners, templates and other accessories required for a complete installation.
Co-ordinate with other trades as to the proper fastening systems suitable for the substrates to which the item is to be secured. Refer to project manager if in doubt.
Fasten galvanised items with galvanised fasteners.

**206 Galvanising**

Where scheduled or specified galvanised steel after chemical descaling in accordance with AS/NZS 4791 and AS/NZS 4792, so that rust, mill scale, oil grease and other foreign matter is removed leaving a clean surface. Then immerse steel in a bath of molten zinc so that when withdrawn, the zinc coating solidifies to a dry film thickness of 100 microns. Allow a 48 hour curing period before transporting steelwork.
Repair abrasions, site welds, etc., by thoroughly wire brushing affected areas to achieve a clean sound substrate and patch coating with a Zinc-rich paint with a film thickness of 100 microns.

## PART III EXECUTION

**301 Examination**

Inspect site conditions before fabrication, where possible, and before delivery of materials. Ensure conditions are satisfactory for installation. Arrange for rectification required.
Ensure tasks and activities comply with the Act, Regulation, Code of Practice or Australian Standards, as relevant.

Start of work means total acceptance of relevant conditions.

**302 Preparation**

A. Field measurements: do not delay job progress. Allow for adjustments and fitting of the work in the field where taking of measurements might cause delay.

B. Co-ordination with work of others: furnish to each relevant trade foreman anchorages and setting drawings, diagrams, templates and instructions for installation of items having integral anchors which are to be embedded in concrete or masonry construction. Co-ordinate delivery of such items to the project site.

**303 Inspection and Reinstatement**

A. Check fabrications as they are unloaded at the project site for evidence of physical damage. Treat damaged fabrications as follows:

1. Damage through galvanising: perform immediate inorganic zinc silicate paint or cold-galvanising repair. Do not install until reinstated.
2. architectural metalwork: returned to shop for repair or replacement.

B. Verify anchors, bolts and other required anchorage items for proper size and accurate location prior to erection.

**304 Installation**

A. Anchorage: except for anchorages furnished herein but placed by other trades, set and secure necessary anchorages, including concrete and masonry inserts, bolts, wood screws and other connectors as needed. Perform cutting, drilling and fitting as needed, locating anchorages and holes to ensure proper positioning of completed work.

B. Fit: finish work accurately, plumb, level, square and true in reference to adjacent construction.

C. Finish: do not cut or abrade shop finishes which cannot be completely restored in the field.
The use of gas-cutting torch in the field for correcting fabrication errors will not be permitted.
Fabrications may be cut shorter with power hacksaws on site.

**305 Field Quality Control**

Where considered necessary by the project manager, arrange for the manufacturer of products to instruct installers regarding correct installation.

**306 Protection**

Cover work: immediately following installation, wrap or cover architectural metalwork to avoid wear and tear of finish during subsequent construction.

**307 Cleaning**

Clean materials installed to the satisfaction of the project manager.
Remove temporary protective coatings.

**308 Completion**

Complete contracted work in accordance with contract documents and written variation orders issued by the project manager.

**END OF SECTION**

## PART I GENERAL

**101 Scope**

Supply, engineer and install required equipment including but not limited to:

**102 Related Work**

Co-ordinate and co-operate with the following trade sections:

**103 Quality Assurance**

Work of this trade section will be performed by experienced craftsmen familiar with the quality required in this class of work.
Comply throughout with manufacturer's instructions.

**104 References**

Comply with applicable portions of the following Australian Standards:

| | | |
|---|---|---|
| AS/NZS 1554 | Structural steel welding. | |
| | 1554.6 2012 | Welding stainless steel for structural purposes. |
| | *There are 6 other parts, 2002-2011.* | |
| AS 1627 | Metal finishing - Preparation and pre-treatment of surfaces. | |
| | 1627.6 2003 | Chemical conversion treatment of metals. |
| | *There are 6 other parts, 1997 - 2005.* | |
| AS/NZS 1664 | Aluminium structures. *There are 2 parts, 2 Supplements and 4 Amdts, 1997-1999.* | |
| AS/NZS 1734 1997 | Aluminium and aluminium alloys - Flat sheet, coiled sheet and plate. | |
| AS 1742 | Manual of uniform traffic control devices. *There are 14 parts and 4 Amdts, 2007 - 2011.* | |
| AS/NZS 1866 1997 | Aluminium and aluminium alloys - Extruded rod, bar, solid and hollow shapes. | |
| AS 4100 1998 | Steel structures *Plus 1 Supplement, 1999, 1 Amdt 2012.* | |
| AS/NZS 4680 2006 | Hot-dip galvanized (zinc) coatings on fabricated ferrous articles. | |

Comply with requirements of statutory and local authorities.

**105 Shop Drawings**

Comply with DOCUMENT 00800, clause 27.
Provide shop drawings for major items supplied hereunder.

A. Contract drawings and details provided are indicative as to general and minimum requirements, and do not show conditions.
   Develop details not shown and in conformity with the indicative details shown.
B. Take and confirm dimensions on site, before preparing shop drawings where possible.
C. Submit detailed shop drawings for fabrication and installation of major metalwork. Show plans, elevations and detailed sections; indicate materials, finishes, types of joinery, fasteners, anchorages and accessory items. Provide setting diagrams and full- scale templates of blocking, anchorages, sleeves and bolts installed by others.
D. Evidence of payment of any relevant fees, where applicable.

**106 Samples**

A. Sample welds: if requested, provide samples of weld types, including samples of railings joined at right angles and at typical acute angles, welded and ground smooth, for approval. If not acceptable, provide additional samples until approved. Approved samples establish quality of similar work of this section.
B. Check on delivery: request project manager to check materials on delivery to site for quality, and materials not meeting the requirements of this specification or equal to approved samples will be rejected.
   Return rejected materials to the fabricator at the fabricator's expense.
C. Finish: provide samples of specified finishes when requested.

**107 Warranty**

Provide warranty covering the work against defective materials and workmanship for a period … years from the date of Practical Completion. Include a statement that the whole of the work has been carried out in accordance with relevant Australian Standards and codes and manufacturer's instructions in effect at the time of installation.

## PART II MATERIALS

**201 Materials**

Select from: access control, auto gate, operators, barriers, bollards, car turntables, fences and gates, keycard control systems, turnstiles.

| Item | Thickness | Manufacturer | Material | Model | Number | Finish | Size |
|---|---|---|---|---|---|---|---|
| | | | | | | | |
| | | | | | | | |

| Item | Thickness | Manufacturer | Material | Model | Number | Finish | Size |
|---|---|---|---|---|---|---|---|
| | | | | | | | |

**202 Finish**

Materials exposed to weather maybe either:
Mild steel - hot dipped galvanised after fabrication or chromate pre-treated followed by polyester powder coating.
Stainless steel type 304 or 316.
Comply with relevant codes of practice or manufacturers' recommendations.

**203 Welding Steel**

General: details of joints, the techniques of welding employed, the appearance and quality of welds made and the methods used to correct defective work; conform to requirements of AS/NZS 1554.
Welds exposed to view: grind smooth to project manager's approval.
Concealed welds: grind smooth before galvanising.
Tack or skip welding: at regular intervals, very neat; not permitted if material is to be hot dip galvanised.
Remove weld spatter.
Certification: only welders who have previously been qualified by tests may weld.
Tack welding or skip welding will NOT be permitted where items are to be galvanised. Weld continuously form joints and connections to exclude water and to permit draining during galvanising.
Stainless steel welding: refer AS/NZS 1554.

**204 Connection Design**

General: design fabricated items so that possible work is done before delivery. Fully protect for shipment. Take possible care to prevent damage.

A. Welding external items: conform to the recommendations of AS/NZS 1554, noting particularly the design criteria.
B. Flanges: concealed where possible. Sleeve connecting railings inside railing sections and secure with flush or set screws. Except where access is impossible, connection screws and bolts will be on the underside of joints.
C. Fasteners on the top of railing sections will not be permitted.
D. Weld shop connections for steel fabrications, and bolt field connections.
E. Provide smooth finishes to exposed surfaces with sharp well-defined lines and arrises. Mill to a close fit machined joints. Design necessary lugs, brackets and similar items so that work can be assembled and installed in a neat, substantial manner.
F. Provide ample strength and stiffness by using appropriate metal thickness of assembly and supports.
G. Provide holes and connections as required to accommodate the work of other trades and for site assembly of metalwork. Drill or punch and ream in the shop.

**205 Miscellaneous**

Fasteners: provide required bolts, screws, inserts, fasteners, templates and other accessories required for a complete installation.
Co-ordinate with other trades as to the proper fastening systems suitable for the substrates to which the item is to be secured. Refer to project manager if in doubt.
Fasten galvanised items with galvanised fasteners.

## PART III EXECUTION

**301 Examination**

Inspect site conditions before fabrication, where possible, and before delivery of materials. Ensure conditions are satisfactory for installation. Arrange for rectification required.
Ensure tasks and activities comply with the Act, Regulation, Code of Practice or Australian Standards, as relevant.
Start of work means total acceptance of relevant conditions.

**302 Preparation**

A. Field measurements: do not delay job progress. Allow for adjustments and fitting of the work in the field where taking of measurements might cause delay.
B. Co-ordination with work of others: furnish to each relevant trade foreman anchorages and setting Drawings, diagrams, templates and instructions for installation of items having integral anchors which are to be embedded in concrete or masonry construction. Co-ordinate delivery of such items to the project site.

**303 Inspection and Reinstatement**

A. Check fabrications as they are unloaded at the project site for evidence of physical damage.
   1. Treat damaged fabrications as follows:
      Damage through galvanising: perform immediate inorganic zinc silicate paint or cold-galvanising repair. Do not install until reinstated.
   2. Architectural metalwork: Returned to shop for repair or replacement.

B. Verify anchors, bolts and other required anchorage items for proper size and accurate location prior to erection.

**304 Installation**

A. Anchorage: except for anchorages furnished herein but placed by other trades, set and secure necessary anchorages, including concrete and masonry inserts, bolts, wood screws and other connectors as needed. Perform cutting, drilling and fitting as needed, locating anchorages and holes to ensure proper positioning of completed work.

B. Fit: during installation and assembly, form tight joints with exposed connections accurately fitted, and reveals uniform. Finish work accurately, plumb, level, square and true in reference to adjacent construction. Make tolerances confirm to Australian Standards.

C. Finish: do not cut or abrade shop finishes which cannot be completely restored in the field.
The use of gas-cutting torch in the field for correcting fabrication errors will not be permitted under conditions. Fabrications may be cut shorter with power hacksaws on site.
Isolate dissimilar metals likely to be subject to moisture with inert materials, not visible on completion of installation.

**305 Field Quality Control**

Where considered necessary by the project manager, arrange for the manufacturer of products to instruct installers regarding correct installation.

**306 Protection**

Cover work: immediately following installation, wrap or cover architectural metalwork to avoid wear and tear of finish during subsequent construction.

**307 Cleaning**

Clean materials installed to the satisfaction of the project manager.
Remove temporary protective coatings.

**308 Completion**

Complete contracted work in accordance with contract documents and written variation orders issued by the project manager.

**END OF SECTION**

## PART I GENERAL

### 101 Scope

The work of this trade section covers the supply and installation of manufactured unit kitchen items.
It includes but is not limited to:
Kitchen cabinets and cupboards
Pantry shelves
Shelving
Counters
Tearoom cupboards
Other:

### 102 Related Work

Co-ordinate and co-operate with the following trades:

| | |
|---|---|
| Carpentry | Wall finishes |
| Floor finishes | Ceiling finishes |
| Plumbing | Electrical installation |
| Other: | |

### 103 Quality Assurance .

Manufacturers and installers are required to be widely experienced in the relevant aspects and class of work required for this section.
At a place selected by the project manager, construct a prototype of a completed installation. Include in this prototype all elements required by this specification, finished in every respect. When approved by the project manager, each prototype remains part of the work and becomes the standard for the remaining work.

### 104 References

Comply with applicable portions of the Australian Standards:

| | | |
|---|---|---|
| AS/NZS 1859 | Reconstituted wood-based panels – Specifications. | |
| | 1859.1 2004 | Particleboard. *Plus 2 Amdts, 2006 - 2011.* |
| | *There are 3 other parts, 2004 – 2005, 3 Amdts, 2006, 1 Amdt 2009.* | |
| AS 2754.2 1991 | Adhesives for timber and timber products - Polymer emulsion adhesives. | |
| AS/NZS 2924 | High pressure decorative laminates – Sheets made from thermosetting resins. | |
| | *There are 2 parts, 1998.* | |
| AS/NZS 4386 | Domestic kitchen assemblies. | |
| | 4386.1 1996 | Kitchen units. |
| | 4386.2 1996 | Installation. |

### 105 Submissions

Submit the following prior to fabrication:
Product literature on proposed hardware items including components.
Technical data on melamine laminates, stone or other materials
Technical data and samples of substrate materials.
Thickness of materials at typical locations.

### 106 Delivery, Handling and Storage

Do not deliver work to the site until after completion of other trade activities which could soil, damage or cause deterioration of manufactured joinery items.
Prevent soiling, damage or deterioration during delivery, storage and handling.
Keep site storage to a minimum. Install directly in place, but refer to clause 302.
If circumstances make storage necessary in areas other than the final location, store only in those that meet the requirements specified for installation areas.

## PART II MATERIALS

### 201 Acceptable Manufacturers

### 202 Materials

| Model No. | Style | Part No. | Finish | Timber Type | Size |
|---|---|---|---|---|---|
| | | | | | |
| | | | | | |
| | | | | | |
| | | | | | |

A. Carcass units:
(Ends and vertical divisions)

| | | |
|---|---|---|
| 1. | Material: | Medium Density Fibreboard. |
| | Name: | |
| | Thickness: | |
| 2. | Material: | |
| | Name: | |
| | Thickness: | |

B. Floors of carcass:

| | | |
|---|---|---|
| 1. | Material: | Medium Density Fibreboard. |
| | Name: | |
| | Thickness: | |
| 2. | Material: | |
| | Name: | |
| | Thickness: | |

C. Shelves within carcass:

| | | |
|---|---|---|
| 1. | Material: | Medium Density Fibreboard |
| | Name: | |
| | Thickness: | |
| 2. | Material: | |
| | Name: | |
| | Thickness: | |

D. Doors of cabinets:

| | | |
|---|---|---|
| 1. | Material: | Medium Density Fibreboard |
| | Name: | |
| | Thickness: | |
| 2. | Material: | |
| | Name: | |
| | Thickness: | |

E. Base (below floor of carcass):

| | | |
|---|---|---|
| 1. | Material: | Medium Density Fibreboard |
| | Name: | |
| | Thickness: | |
| 2. | Material: | |
| | Name: | |
| | Thickness: | |

F. Bulkheads (above cupboards or overhead cabinets):

| | | |
|---|---|---|
| 1. | Material: | Medium Density Fibreboard |
| | Name: | |
| | Thickness: | |
| 2. | Material: | Plasterboard |
| | Thickness: | |
| | Frame: | Metal stud frame or timber stud frame |
| | Finish: | Paint as selected |

G. Back of Carcass:

| | | |
|---|---|---|
| 1. | Material: | Medium Density Fibreboard |
| | Name: | |
| | Thickness: | 3mm |
| 2. | Material: | |
| | Name: | |
| | Thickness: | |

H. Edge Strips and Inserts:

| | | |
|---|---|---|
| 1. | Material: | |
| | Name: | |
| | Thickness: | |
| 2. | Material: | |
| | Name: | |
| | Insert: | |

I. Laminates:

| | | |
|---|---|---|
| 1. Bench top | Manufacture: | |
| | Type: | |
| | Colour: | |
| 2. Doors | Manufacture: | |
| | Type: | |
| | Colour: | |
| 3. Carcass | Manufacture: | |
| | Type: | |
| | Colour: | |
| 4. Internal surfaces | Manufacture: | |
| | Type: | |
| | Colour: | |
| 5. Front of drawers | Manufacture: | |
| | Type: | |
| | Colour: | |

J. Bench Tops:

| | | |
|---|---|---|
| | Material: "Hytex", "Corian", "Granite", "Marble", other. | |
| | Type: | |
| | Thickness: | |

**203 Fasteners and Adhesives**

A. Metal fasteners:

| | | |
|---|---|---|
| 1. | Manufacturer: | |
| | Type: | |
| 2. | Manufacturer: | |
| | Type: | |

B. Plastic fasteners:

| | | |
|---|---|---|
| 1. | Manufacturer: | |
| | Type: | |
| 2. | Manufacturer: | |
| | Type: | |

C. PVA adhesives:
Comply with AS 2754.2.

| | | |
|---|---|---|
| | Manufacturer: | |
| | Type: | |

D. Contact adhesives:
Comply with relevant Australian Standard.

| | | |
|---|---|---|
| | Manufacturer: | |
| | Type: | |

**204 Hardware**

A. Hinges:
a. Manufacturer:
i. Type:
ii. No. per door:

B. Catches:

a. Manufacturer:
i. Type:

C. Door handles:
a. Manufacturer:
i. Type:

D. Drawer handles:
a. Manufacturer:
i. Type:

E. Other items:

F. Sliding door tracks:
a. Manufacturer:
b. Type:

G. Pot drawer runners:
a. Manufacturer:
b. Type:

H. Adjustable shelf brackets:
a. Manufacturer:
b. Type:

I. Glazed shelves:
a. Thickness:
b. Type:

**205 Fabrication**

Do not fabricate any component until a thorough series of measurements has been made at the site after the installation of finishes.
Refer clause 301 below.
Construct by screwing and gluing or other approved method. A dry stapled assembly will not be approved.
Fabricate bench tops as indicated in a manner recommended by the material's manufacturer. Fabricate units without joints unless counter length exceeds maximum available length of materials.
Seal joints between counter and splash back with matching colour silicone. Wherever possible, per-cut openings to receive hardware, appliances, plumbing fixtures, electrical work and similar items.
Locate openings accurately using templates or roughing-in diagrams for proper size and shape. Smooth edges of cut-outs and, where located in bench tops and similar exposures, seal edges of cut-outs with a water resistant coating.
Back prime all concealed solid timber surfaces prior to installation.
Install fasteners, hinges etc. in accordance with manufacturer’s instructions. When in doubt about suitability, consult with manufacturer of the items specified or selected.

**206 Inspection Before Delivery**

Advise project manager when the first of any group of items is ready for inspection not less than four days before delivery is due at the site. Where work is found not to comply with documentation, the project manager will order rectification. The project manager will be the sole decision-maker regarding compliance or non-compliance.

## PART III EXECUTION

**301 Examination**

Visit the site and inspect conditions. Check dimensions and compare all aspects with the drawings and specification. Resolve differences before ordering materials or starting work.
Ensure tasks and activities comply with the Act, Regulation, Code of Practice or Australian Standards, as relevant.
Start of work means total acceptance of all conditions.

**302 Preparation for Installation**

Prior to installing, condition joinery to the average humidity conditions prevailing in the installation areas.
Delivery anchoring devices and similar inserts required to be built into substrates well in advance of the fixing of fittings and provide full details when they are to be fixed by others.
Prior to installation, examine shop-fabricated work for completeness and remedy and deficiencies. Include back priming. Remove packing where not required.
Thoroughly clean all floors and walls that will be permanently concealed by joinery.

**303 Installation**

Use concealed shims as required to install the work plumb, level, straight and distortion free within the following tolerances:
- 1mm in 800mm for plumb and level (including bench tops),
- 0.5mm maximum offsets in flush adjoining surfaces,
- 2mm maximum offsets in revealed adjoining surfaces.

Scribe and cut to fit adjoining work; refinish cut surfaces or repair damaged finishes at cuts.

Secure joinery with anchors of blocking built-in or directly attached to substrates. Secure to grounds, stripping and blocking with countersunk, concealed fasteners and blind nailing as required to complete the installation. Except where pre-finished matching fastener heads are required, use fine finishing nails, countersunk and filled flush. Use a matching filler where a transparent finish is required.
Install casework without distortion so that doors will fit openings properly and be accurately aligned.

**304 Hardware**

Install all door and joinery hardware as scheduled, listed and required in full compliance with the manufacturer's recommendations.
Adjust as needed to centre doors in openings.

**305 Adjustments, Cleaning, Finishing and Protection**

A. Finish the work specified in this Trade Section and remedy anything not finished at the shop or any other stage prior to completion.
B. Adjust joinery to achieve a uniform appearance.
C. Lubricate and clean hardware making any final adjustments needed for proper operation. Remove all handling marks from visible joinery surfaces.
D. Protection: do everything needed to ensure that all work is without damage or deterioration at completion.

**306 Completion**

Complete all contracted work in accordance with contract documents and written variation orders issued by the project manager.

**END OF SECTION**

## PART I GENERAL

### 101 Scope

The work of this trade section covers the supply and installation of manufactured casework items.
It includes but is not limited to:
Kitchen cabinets and cupboards
Shelving
Display units
Bathroom cabinets
Laundry cabinets
Counters
Tearoom cupboards
Wardrobes.

### 102 Related Work

Co-ordinate and co-operate with the following trades:

| | |
|---|---|
| Carpentry | Wall finishes |
| Floor finishes | Ceiling finishes |
| Plumbing | Electrical installation |

### 103 Quality Assurance

Manufacturers and installers are required to be widely experienced in the relevant aspects and class of work required for this section.
At a place selected by the project manager, construct a prototype of a completed installation. Include in this prototype all elements required by this specification, finished in every respect. When approved by the project manager, each prototype remains part of the work and becomes the standard for the remaining work.

### 104 References

Comply with applicable portions of the Australian Standards:

| | | |
|---|---|---|
| AS/NZS 1859 | Reconstituted wood-based panels – Specifications. | |
| | 1859.1 2004 | Particleboard. *Plus 2 Amdts, 2006 - 2011.* |
| | *There are 3 other parts, 2004 – 2005, 3 Amdts, 2006 - 2009.* | |
| AS 2754.2 1991 | Adhesives for timber and timber products - Polymer emulsion adhesives. | |
| AS/NZS 2924 | High pressure decorative laminates – Sheets made from thermosetting resins. | |
| | *There are 2 parts, 1998.* | |
| AS/NZS 4386 | Domestic kitchen assemblies. | |
| | 4386.1 1996 | Kitchen units. |
| | 4386.2 1996 | Installation. |
| AS 4786.2 2005 | Timber flooring - Sanding and finishing. | |

### 105 Submissions

Submit the following prior to fabrication:
Product literature on proposed hardware items including components.
Technical data on melamine laminates proposed for use.
Technical data and samples of substrate materials.
Thickness of materials at typical locations.

### 106 Delivery, Handling and Storage

Do not deliver work to the site until after completion of other trade activities which could soil, damage or cause deterioration of manufactured joinery items.
Prevent soiling, damage or deterioration during delivery, storage and handling.
Keep site storage to a minimum. Install directly in place, but refer to clause 302.
If circumstances make storage necessary in areas other than the final location, store only in those that meet the requirements specified for installation areas.

## PART II MATERIALS

### 201 Materials

A. Carcass units: (ends and vertical divisions).

| **Description** | **Details of materials** |
|---|---|
| Material: | Medium density fibreboard |
| Name: | |
| **Thickness:** | |

B. Floors of carcass:

| Description | Details of materials |
|---|---|
| Material: | Medium density fibreboard. |
| Name: | |
| Thickness: | |

C. Shelves within carcass:

| Description | Details of materials |
|---|---|
| Material: | Medium density fibreboard |
| Name: | |
| Thickness: | |

D. Doors of cabinets:

| Description | Details of materials |
|---|---|
| Material: | Medium density fibreboard |
| Name: | |
| Thickness: | |

E. Base (below floor of carcass):

| Description | Details of materials |
|---|---|
| Material: | Medium density fibreboard |
| Name: | |
| Thickness: | |

F. Bulkheads (above cupboards or overhead cabinets):

| Description | Details of materials |
|---|---|
| Material: | Medium density fibreboard |
| Name: | |
| Thickness: | |
| Material: | Plasterboard |
| Thickness: | |
| Frame: | Metal stud frame or timber stud frame |
| Finish: | Paint as selected |

G. Back of carcass:

| Description | Details of materials |
|---|---|
| Material: | Medium density fibreboard |
| Name: | |
| Thickness: | 3mm |

H. Edge strips and inserts:

| Description | Details of materials |
|---|---|
| Material: | |
| Name: | |
| Thickness: | |
| Insert: | |
| Material: | |
| Name: | |

I. Laminates: also refer to 201 G and 201 H:

| Item | Description | Details |
|---|---|---|
| Bench top | Manufacture: | |
| | Type: | |
| | Colour: | |
| Doors | Manufacture: | |
| | Type: | |
| | Colour: | |
| Carcass | Manufacture: | |
| | Type: | |
| | Colour: | |
| Internal surfaces | Manufacture: | |

| Item | Description | Details |
|---|---|---|
| | Type: | |
| | Colour: | |
| Front of drawers | Manufacture: | |
| | Type: | |
| | Colour: | |

J. Bench tops:

| Description | Details |
|---|---|
| Material: | Hytex, Corian, Granite, Marble. |
| Type: | |
| Thickness: | |

**202 Fasteners and AdhesivesNote: refer Hafele catalogue.**

A. Metal fasteners:

| Manufacturer | Details |
|---|---|
| Type: | |
| | |
| Type: | |

B. Plastic fasteners:

| Manufacturer | Details |
|---|---|
| Type: | |
| | |
| Type: | |

C. PVA adhesives:
Comply with AS 2754.2.

| Manufacturer | Details |
|---|---|
| Type: | |
| | |

D. Contact adhesives:
Supply the manufacturer’s instructions and incorporate into this specification.

| Manufacturer | Details |
|---|---|
| Type: | |
| | |

**203 Hardware**

| Item | Manufacturer | Type |
|---|---|---|
| Hinges | | |
| Catches | | |
| Door handles | | |
| Drawer handles | | |
| Sliding door tracks | | |
| Pot drawer runners | | |
| Adjustable shelf brackets | | |
| Glazed shelves | | |
| Other items | | |

**204 Fabrication**

Construct by screwing and gluing or other approved method. A dry stapled assembly will not be approved.
Fabricate bench tops as indicated in a manner recommended by the material's manufacturer. Fabricate units without joints unless counter length exceeds maximum available length of materials.
Seal joints between counter and splash back with matching colour silicone. Wherever possible, pre-cut openings to receive hardware, appliances, plumbing fixtures, electrical work and similar items.
Locate openings accurately using templates or roughing-in diagrams for proper size and shape. Smooth edges of cut-outs and, where located in bench tops and similar exposures, seal edges of cut-outs with a water resistant coating.
Back prime all concealed solid timber surfaces prior to installation.

Install fasteners, hinges etc. in accordance with manufacturer's instructions. When in doubt about suitability, consult with manufacturer of the items specified or selected.

**205 Inspection Before Delivery**

Advise project manager when the first of any group of items is ready for inspection not less than 4 days before delivery is due at the site. Where work is found not to comply with documentation, the project manager will order rectification. The project manager will be the sole decision-maker regarding compliance or non-compliance.

## PART III EXECUTION

**301 Examination**

Visit the site and inspect conditions. Check dimensions and compare all aspects with the drawings and specification. Resolve differences before ordering materials or starting work.
Ensure tasks and activities comply with the Act, Regulation, Code of Practice or Australian Standards, as relevant.
Start of work means total acceptance of all conditions.

**302 Preparation for Installation**

Prior to installing, condition joinery to the average humidity conditions prevailing in the installation areas.
Deliver anchoring devices and similar inserts required to be built into substrates well in advance of the fixing of fittings and provide full details when they are to be fixed by others.
Prior to installation, examine shop-fabricated work for completeness and remedy and any deficiencies. Include back priming. Remove packing where not required.
Thoroughly clean all floors and walls that will be permanently concealed by joinery.

**303 Installation**

Use concealed shims as required to install the work plumb, level, straight and distortion free within the following tolerances:

- 1mm in 800mm for plumb and level (including bench tops),
- 0.5mm maximum offsets in flush adjoining surfaces,
- 2mm maximum offsets in revealed adjoining surfaces.

Scribe and cut to fit adjoining work; refinish cut surfaces or repair damaged finishes at cuts.
Secure joinery with anchors of blocking built-in or directly attached to substrates. Secure to grounds, stripping and blocking with countersunk, concealed fasteners and blind nailing as required to complete the installation.
Except where pre-finished matching fastener heads are required, use fine finishing nails, countersunk and filled flush. Use a matching filler where a transparent finish is required.
Install casework without distortion so that doors will fit openings properly and be accurately aligned.

**304 Hardware**

Install all door and joinery hardware as scheduled, listed and required in full compliance with the manufacturer's recommendations.
Adjust as needed to centre doors in openings.

**305 Adjustments, Cleaning, Finishing and Protection**

A. Finish the work specified in this trade section and remedy anything not finished at the shop or any other stage prior to completion.
B. Adjust joinery to achieve a uniform appearance.
C. Lubricate and clean hardware making any final adjustments needed for proper operation.
D. Remove all handling marks from visible joinery surfaces.
E. Protection: do everything needed to ensure that all work is without damage or deterioration at completion.

**306 Completion**

Complete all contracted work in accordance with contract documents and written variation orders issued by the project manager.

**END OF SECTION**

## PART I GENERAL

### 101 Scope
The work of this trade section covers the supply and installation of floor mats and/or recessed mats and frames including but not limited to:

### 102 Related Work
Co-ordinate and co-operate with the following trades:

| | |
|---|---|
| Concrete | Metalwork |
| Floor tiling | Carpet |
| Resilient flooring | |

### 103 Quality Assurance
Suppliers and installers are required to be widely experienced in the relevant aspects and class of work required for this section. At a place selected by the project manager, construct a prototype of a completed installation of floor mat and frame.
On completion of the prototype and approval of all aspects of the installation, the work will remain in place and become the standard for the remaining work.

### 104 References
(Not used).

### 105 Submissions
Provide samples and data sheets of all materials.
Obtain project manager's approval for each item before ordering.

### 106 Delivery, Handling and Storage
Deliver all materials in the packaging of the supplier bearing the brand name, colour, thickness and other relevant data.
Store all materials in a secure dry area away from other materials which may cause deterioration.

### 107 Warranty
Provide a warranty covering all aspects of the installation performed by this trade, against defective materials and workmanship for a period of … years from the date of completion.
Include a statement that the whole of the work has been carried out in accordance with the relevant Australian Standards and the instructions of the manufacturers of components in effect at the time of installation.

## PART II MATERIALS

### 201 Materials

| Item | Type Required | |
|---|---|---|
| Floor Mat | | |
| Manufacturer | | |
| Type | | |
| Size | | |
| Colour | | |
| Location | | |
| Frame | | |
| Material | 20 x 30 x 3 mm thick brass angle | |
| Size | To suit size of mat | |
| Anchors | Brass or galvanised steel | |
| Screed | | |
| Cement | Portland cement | |
| Sand | Clean, washed, sharp, sieved and graded, complying with the following limits: | |
| Sand grade | No | % Passing sieve |
| | 4 (4.75mm) | 100 |
| | 8 (2.36mm) | 95-100% |
| | 100 (150 microns) | 25% max |
| | 200 (75 microns) | 10% max |
| Fineness modulus | 1.6 to 2.5% | |
| Water demand ratio by weight | 0.65% maximum | |
| Aggregate | Passing 4.75m sieve 80%<br>Passing 6.00mm sieve 90%<br>Passing 8.00mm sieve 100% | |

| Item | Type Required |
|---|---|
| Water | Clean, drinking quality |
| Mesh | Galvanised steel, welded wire fabric min 2.5mm diameter wires at 100mm centres each way |

**202 Fabrication**

Comply with the relevant Standards.
Contractor to check all dimensions on site.
Contractor to provide prototype for project manager's approval prior to manufacture.
Contractor to present sample to project manager for final selection.

**203 Schedule of Quantities**

(Refer to drawings for locations of item numbers).

| Item No | Type | Size | Material W x L x D | Remarks |
|---|---|---|---|---|
| FM 1 | | | | |
| FM 2 | | | | |
| FM 3 | | | | |

## PART III EXECUTION

**301 Examination**

Examine the site conditions applicable to each installation. Arrange for correction if required.
Ensure tasks and activities comply with the Act, Regulation, Code of Practice or Australian Standards, as relevant.
Start of work means total acceptance of conditions.

**302 Installation**

Provide mat recess in floor to accept the size of mat required.
Refer to drawings for location of floor mats.
Frame to be provided with anchors and cast-in place or to be fixed in the mat recess with masonry anchors.
Place screed in mat recess up to and level with the top face of the horizontal leg of the brass angle frame.

**303 Preparation**

Comply with referenced Standards and manufacturer's recommendations. Do not install material until space is enclosed and weatherproof and until wet work in space is completed and dry.

**304 Cleaning and Protection**

On completion of mat recess or area remove all dirt, scraps of left over materials and vacuum the area clean.
Remove and replace work which cannot be successfully repaired or cleaned.

**305 Completion**

Complete all contracted work in accordance with contract documents and written variation orders issued by the project manager.
Work will be deemed complete after being inspected and approved by project manager.

**END OF SECTION**

## PART I GENERAL

### 101 Scope

Supply and install a complete installation of sauna equipment and finishes, including but not limited to:
Floor tiles and coving
Wall and ceiling lining and insulation
Benches
Power supply
Heating unit
Thermometer
Hygrometer
Light fitting
Door

### 102 Related Work

Co-ordinate and co-operate with the following trades:

| | |
|---|---|
| Ceramic tile | Carpentry |
| Electrical installation | Glass and glazing |

### 103 Quality Assurance

Engage only experienced tradespeople, licensed or approved by the suppliers of materials where applicable. Provide evidence of the licence to the project manager.

### 104 References

Comply with relevant Australian Standards where such apply to any of the work in this trade section.

| | |
|---|---|
| AS 1428 | Design for access and mobility.<br>1428.1 2009 General requirements for access – New building work.<br>*There are 5 other parts. 1992 – 2010.* |
| AS/NZS 3350.2.53 1998 | Safety of household and similar electrical appliances – Particular requirements - Sauna heating appliances. *Plus 2 Amdts, 2001-2007.* |

Comply with requirements of any statutory authority having jurisdiction over the work.

### 105 Submissions

Before ordering materials, submit samples and/or product data of specified products to the project manager.

### 106 Warranty

Provide a warranty to the proprietor for a period of year(s) from the date of Practical Completion, covering the whole of the work of this trade section.
For the period of the warranty and without cost to the proprietor, provide an undertaking to make good, including any finish or thing disturbed during the making good, any defect resulting from inadequate materials or workmanship.

## PART II MATERIALS

### 201 Acceptable Manufacturers

### 202 Proprietary Item

Name of unit:
Size:
Model no.:
Power supply: single phase for light fittings.
Single phase for up to 10.0KW heater.
Three phase for 10.0KW heater.
Heating unit:
Thermometer: glass covered bi-metal type, wall-mounted.
Hygrometer:
Ventilation: inlet fixed outlet, outlet adjustable both of timber slats.
Light fitting: ceramic lamp holder with fully insulated glass cover or wood slat cover.
Bucket and ladle: cedar or birch.
Stones: diabase type.
Door: cedar frame and lining with 6.38mm thick clear laminated glass vision panel.

### 203 Materials

In accordance with manufacturer's recommendations.

A. Floor tiles: ceramic tile, non-skid, size: colour: type:
B. Wall studs: oregon
Ceiling joists: oregon

C. Wall and ceiling lining: 100mm wide western red cedar, ship-lap or other similar profile, 10mm thick; non-corrosive secret fixed nails. Insulation batts 100mm thick between studs and above ceiling lining, R3.0 minimum.

D. Bench seats: western red cedar rails, supporting 38mm thick benches, 500mm wide, set in two tiers. Rails to span from wall to wall.
Timber to timber fixing to be timber dowels. Metal fixings not permitted.

## PART III EXECUTION

### 301 Examination

Examine the conditions in the Sauna Room. Arrange with the contractor for correction of any non-optimum conditions.
Ensure tasks and activities comply with the Act, Regulation, Code of Practice or Australian Standards, as relevant.
Start of work means total acceptance of conditions.

### 302 Preparation

Prepare each surface of floor, walls and ceiling before installation of finishing materials.

### 303 Installation

A. Floor tiles: Install on level floor. Seal joints with epoxy grout as recommended by the tile and grout manufacturer.
Against walls under benches, form a 60mm radius cove in cement mortar.
Fix tiles to the curved surface.

B. B Wall and ceiling lining: provide and fix square stopping bead covering joints at wall corners and as a cornice. Install insulation batts between wall studs and ceiling joists.
1. Fix cedar boards to insulation-filled wall framing and ceiling framing with secret nailing.

C. C Bench seats: construct rails from wall to wall, under benches.
No supports are to reach the floor.
1. Secure framing to studs in walls.
2. Secure benches with cedar dowels to rails.

D. Power supply: provide power to heating unit directly wired, or externally mounted as instructed.

E. Heating unit: install where directed and secure to wall as instructed by supplier.

F. Thermometer and hygrometer: install on walls where directed.

G. Light fitting: mount where instructed and connect to power.

H. Door: install door on corrosion resistant hinges.

I. Floor-waste: install where directed and connect to drain.

### 304 Field Quality Control

A representative of the material manufacturer or supplier is required to be present at the time of locating materials in each space to ensure correct installation first time.

### 305 Repairs

Should damage occur to any material or surface during installation, make good or replace without cost to the proprietor.

### 306 Cleaning

On completion, clean all surfaces, remove debris and leave in satisfactory condition.

### 307 Commissioning

Operate all equipment on a test basis.
Repair any faults which occur.
Commissioning is considered completed when installation has operated continuously for 24 hours without fault.

### 308 Completion

Complete contracted work in accordance with contract documents and written variation orders issued by the project manager.

**END OF SECTION**

## PART I GENERAL

### 101 Scope

Design, fabricate, supply and install each if the items listed below, including but not limited to:

A. Above ground pool
B. Prefabricated pool
C. In-pool lighting
D. Water pumping equipment
E. Water filtering equipment
F. Water treatment equipment
G. Metalwork, ladders etc.
H. Safety fencing and self-closing gate

### 102 Related Work

Co-ordinate and co-operate with the following trades:

| | |
|---|---|
| Site preparation, excavation | Plumber, hot and cold water |
| Drainage | Concrete small works |
| Concrete screeds | Metalwork |
| Tanking | Cement render |
| Ceramic tile | Painting |
| Spa baths | Electrical Installation |

### 103 Quality Assurance

Contractor qualifications: minimum 5 years' experience in each item required by this specification. Submit evidence of completed similar work with contact names and telephone numbers.

### 104 References

Comply with applicable portions of the following Australian Standards:

| | | |
|---|---|---|
| AS 1428 | Design for access and mobility. | |
| | 1428.1 2009 | General requirements for access – New building work. |
| | *There are 5 other parts. 1992 – 2010.* | |
| AS/NZS 1838 1994 | Swimming pools - Premoulded fibre-reinforced plastics - Design and fabrication. | |
| AS/NZS 1839 1994 | Swimming pools - Premoulded fibre-reinforced plastics – Installation. | |
| AS 1926 | Swimming pool safety. | |
| | 1926.1 2012 | Safety barriers for swimming pools. |
| | 1926.2 2007 | Location of safety barriers for swimming pools. *Plus 2 Amdts, 2008 - 2011.* |
| | 1926.3 2010 | Water recirculation systems. *Plus 1 Amdt, 2011.* |
| AS 2160.1 1998 | Contract for the supply and construction of a swimming pool or spa – Concrete swimming pool or spa. | |
| AS 2560.2.5 2007 | Sports Lighting – Specific applications – Swimming pools. | |
| AS 2610 | Spa pools. | |
| | 2610.1 2007 | Public spas. *Plus 1 Amdt, 2011.* |
| | 2610.2 2007 | Private spas. *Plus 1 Amdt, 2011.* |
| AS 2783 1992 | Use of reinforced concrete for small swimming pools. *Plus 2 Amdts, 1992-1994.* | |
| AS 2820 1993 | Gate units for private swimming pools. *Plus 1 Amdt, 2000.* | |
| AS 3634 1989 | Solar heating systems for swimming pools | |

### 105 Submissions

A. Shop Drawing: provide a shop drawing showing precise layout of every component of the system and the location of each.
   Comply with Document 00800 clause 27 shop drawings.
B. Submit samples of each component for approval of the project manager before ordering material.
C. Evidence of payment of relevant fees, where applicable,

### 106 Project Conditions

Inspect drawings and visit site. Check aspects of required work and refer any discrepancy to builder and/or project manager, for decision.

### 107 Warranty

Provide a warranty to the proprietor for a period of year(s) from the date of Practical Completion, covering the whole of the work of this trade section.
For the period of the warranty and without cost to the proprietor, provide an undertaking to make good, including any finish or thing disturbed during the making good, any defect resulting from inadequate materials or workmanship.

## PART II MATERIALS

**201 Acceptable Manufacturers**

The following manufacturers are acceptable for supply of the following materials:

A. Above ground pool:
B. Prefabricated pool:
C. In-pool lighting:
D. Water pumping equipment:
E. Water filtering equipment:
F. Water treatment equipment:
G. Metalwork (ladders, diving boards etc.)
H. Safety fencing and gate
I. OTHER.

202 **Materials**

| Item: | Manufacturer | Size | Model No. | Finish | Colour |
|---|---|---|---|---|---|
| | | | | | |
| | | | | | |
| | | | | | |

## PART III EXECUTION

**301 Examination**

Obtain essential services information (dial before you dig).
Inspect site conditions before fabrication, where possible, and before delivery of materials. Ensure conditions are satisfactory for installation. Arrange for rectification required.
Ensure tasks and activities comply with the Act, Regulation, Code of Practice or Australian Standards, as relevant.
Start of work means total acceptance of relevant conditions.

**302 Preparation**

Refer clause 102 above. Ensure that other trades involved in pool construction and fitout are co-operative and co-ordinated to complete the work without delay.

A. Field measurements: do not delay job progress. Allow for adjustments and fitting of the work in the field where taking of measurements might cause delay.
B. Co-ordination with work of others: furnish to each relevant trade foreman anchorages and setting drawings, diagrams, templates and instructions for installation of items having integral anchors which are to be embedded in construction. Co-ordinate delivery of such items to the project site.

**303 Installation**

A. Check fabrications as they are unloaded at the project site for evidence of physical damage.
   1. Treat damaged fabrications as follows:
   2. Return to supplier for replacement as soon as possible.
B. Verify anchors, bolts and other required anchorage items for proper size and accurate location prior to installation.
C. Fit: during installation and assembly, form tight joints with exposed connections accurately fitted. Finish work accurately, plumb, level, square and true in reference to adjacent construction. Make tolerances conform to Australian Standards.
D. Finish: do not cut or abrade shop finishes which cannot be completely restored in the field.
   1. Fabrications may be cut shorter with power hacksaws on site.
   2. Isolate dissimilar metals likely to be subject to moisture with inert materials, not visible on completion of installation.
E. Comply throughout with the manufacturers' written instructions.

**304 Field Quality Control**

Where considered necessary by the project manager, arrange for the manufacturer of products to instruct installers regarding correct installation.

**305 Protection**

Cover work: immediately following installation, wrap or cover architectural metalwork to avoid wear and tear of finish during subsequent construction.

**306 Cleaning**

Clean materials installed to the satisfaction of the project manager.
Remove temporary protective coatings.

**307 Completion**

Complete contracted work in accordance with contract documents and written variation orders issued by the project manager.

**END OF SECTION**

## PART I GENERAL

**101 Scope**

Supply and install a complete installation of equipment for the spa, including but not limited to:
Spa bath
Water jets
Air jet with heater blower
Pumps, cold or hot
Floor waste
Stainless steel handrails
Fencing and self-closing gate for external spa.

**102 Related Work**

Co-ordinate and co-operate with the following trades:

| | |
|---|---|
| Concrete | Plasterboard |
| Brickwork | Plumber Hot and Cold Water |
| Carpentry | Metalwork |
| Painting | Sewerage & Drainage |

Note: Plumbing and controls trades are required to co-ordinate closely with concrete trade.
Piping and controls will be placed before concrete is poured for floors and for walls. Ensure careful placement of piping and controls and maintenance in position during pouring of concrete.

**103 Quality Assurance**

Engage only experienced tradespeople, licensed or approved by the suppliers of materials.
Provide evidence of the licence or approval to the project manager.

**104 References**

Comply with relevant Australian Standards where such apply to any of the work in this Trade Section.

| | | |
|---|---|---|
| AS 1428 | Design for access and mobility. | |
| | 1428.1 2009 | General requirements for access – New building work. |
| | *There are 5 other parts. 1992 – 2010.* | |
| AS 2610 | Spa pools. | |
| | 2610.1 2007 | Public spas. *Plus 1 Amdt, 2011.* |
| | 2610.2 2007 | Private spas. *Plus 1 Amdt, 2011.* |
| AS 3861 1991 | Spa baths. | |

Comply with requirements of any statutory authority having jurisdiction over the work.

**105 Submissions**

Before ordering materials, submit samples and/or product data of specified products to the project manager.

**106 Delivery Handling and Storage**

Keep on-site storage of materials to a minimum, delivering them as required for direct installation. Be responsible for loss and damage to delivered materials, both stockpiled and in place.

**107 Warranty**

Provide a warranty to the proprietor for a period of year(s) from the date of Practical Completion, covering the whole of the work of this trade section, as listed in clause 101.
For the period of the warranty and without cost to the proprietor, provide an undertaking to make good, including any finish or thing disturbed during the making good, any defect resulting from inadequate materials or workmanship.

## PART II MATERIALS

**201 Acceptable Manufacturers** Jets:
Blowers:
Air controls:
Heater:
Pumps:
Spa Bath:

**202 Materials**

Spa bath:
Jets:
Air controls:
Pumps:
NOTE: 30 minute/complete turnover of water required.
Blowers:

Heater:
Piping cables and other supply lines:
Supply all necessary items and connecting devices required.
Waterproof adhesives throughout.
Handrails: stainless steel tube for handrails and standards complete with flanged ends.
Floor Waste:
Provide stainless steel bolts for fixing to structure.
Provide controls for the following items:

## PART III EXECUTION

**301 Examination**

Examine the conditions before any installation starts. Ensure that conditions are satisfactory particularly for laying of pipes and cables.
Arrange with the contractor for correction of any non-optimum conditions.
Ensure tasks and activities comply with the Act, Regulation, Code of Practice or Australian Standards, as relevant.
Start of work means total acceptance of conditions.

**302 Preparation**

Prepare each surface of floor, walls etc. before installation of finishing materials and equipment.

**303 Installation** Locate and install in positions shown on drawings or as directed by the project manager, the following equipment:

| | |
|---|---|
| Spa bath | Pumps |
| Jets | Blowers |
| Air controls | Heater |

Floor waste: provide floor waste adjacent to spa bath.
Make secure as instructed and install connecting piping, wiring etc. and connect to power supply.

**304 Handrails**

Install stainless steel handrails and all components as recommended by manufacturer.

**305 Field Quality Control**

A representative of the material manufacturer or supplier is required to be present at the time of locating materials in each space to ensure correct installation first time.

**306 Repairs**

Should damage occur to any material, equipment or surface during installation, make good or replace without cost to the proprietor

**307 Cleaning**

On completion, clean all surfaces, remove debris and leave in satisfactory condition.

**308 Commissioning**

Operate all equipment on a test basis.
Repair any faults which occur.
Installation is considered completed when it has operated continuously for 24 hours without fault.

**309 Completion**

Complete contracted work in accordance with contract documents and written variation orders issued by the project manager

**END OF SECTION**

## PART I GENERAL

### 101 Scope

Supply, install and commission complete system of electricity power generation including but not limited to:
Photovoltaic (PV) modules (solar electricity).
Wind turbines.
Provide also a complete system of power reticulation for the building with outlets and other needed items.

### 102 Related Work

Co-ordinate and co-operate with the following trades:
Metal decking and roof plumbing Metalwork
Electrical installation

### 103 Quality Assurance

A. Provide written evidence to the project manager and/or engineer of required experience and skills of personnel proposed for this project.
B. Ensure electrical and roof work is performed only by tradesmen with qualifications. Submit evidence of these qualifications.

### 104 References

Comply with applicable portions of the following Australian Standards:

| | | |
|---|---|---|
| AS/NZS 2712 2007 | Solar and heat pump water heaters – Design and construction. *Plus 2 Amdts, 2011.* | |
| AS/NZS 4234 2008 | (formerly Solar water heaters) Heated water systems. *Plus 2 Amdts, 2011.* | |
| AS/NZS 4445.1 1997 | Solar heating - Domestic water heating systems – Performance rating.. | |
| AS 4509 | Stand-alone power systems | |
| | 4509.2 2010 | Stand-alone power systems - System design guidelines. |
| | 4509.3 1999 | (Available Superseded) Stand-alone power systems - Installation and maintenance. *Plus 1 Amdt, 2000.* |
| AS/NZS 5033 2012 | Installation and safety requirements for photovoltaic (PV) arrays | |
| AS 5389 (Int) 2013 | Solar heating and cooling systems–Calculation of energy consumption | |

Comply also with the requirements of environmental and statutory authorities having jurisdictions.

### 105 Submissions

Submit data on units and manufacturers of other components.
Provide drawings of preferred locations and sizing details of roof top platforms required to support units where they are to be provided by others.
Submit to project manager operation and maintenance instructions for units and other items.
Copies of minutes of pre-installation conference.
Evidence of payment of relevant fees, where applicable.

### 106 Delivery, Handling and Storage

Arrange with builder dates of delivery and installation of units and associated components, cranage or handling to installed position and maintenance arrangements.
Where possible, install materials directly in place. Store other materials in a secure location on site as directed by builder.

### 107 Warranty

Provide a warranty to the proprietor via the project manager that units or components which fail within the warranty period of years from the date of Practical Completion will be repaired or replaced without cost to the proprietor.

### 108 Maintenance

Provide an agreement form to be submitted to proprietor offering regular maintenance of the installation for the agreed upon period.
Detail the precise activities of maintenance offered.

## PART II MATERIALS

### 201 Acceptable Manufacturers

Components to be specified may consist of the following:
Photovoltaic modules
Panel mounting
Batteries suitable for solar charging
Regulator and control board.
Inverter charger
Wind generator

**202 Materials**

| Item | Manufacturer | Size | Model No | Finish | Output Rating |
|---|---|---|---|---|---|
| | | | | | |
| | | | | | |
| | | | | | |

**203 Fabrication**

Before delivery to site, pre assemble where possible all items to ensure proper fit and dimension of each item. Disassemble and pack carefully for shipping to the site.

## PART III EXECUTION

**301 Examination**

Inspect drawings and visit site. Check aspects of required work such as plant platforms. Refer any discrepancy to builder and/or project manager for decision and correction.
Obtain essential services information (dial before you dig).
Ensure tasks and activities comply with the Act, Regulation, Code of Practice or Australian Standards, as relevant
Start of work on site means total acceptance of conditions.

**302 Site Inspection**

On delivery and unloading, inspect for damage and arrange immediate replacement if necessary.

**303 Mounting**

Place equipment where directed.
Co-operate with roof installer to ensure watertight installation.

**304 Condensate Drains**

Drain roof-top units to the nearest downpipe or gutter via a trapped 32mm dia PVC pipe.

**305 Connection to Wiring**

Connect the installation to reticulated wiring in accordance with relevant wiring regulations. Install required connections, outlets etc.

**306 Commissioning**

Operate the system for ten days and record results. Rectify any faults. Obtain engineers' and project managers' approval on completion of commissioning.

**307 Completion**

Complete the contracted work in accordance with contract documents and written variation orders issued by the project manager.

**END OF SECTION**

## PART I GENERAL

**101 Scope**

Supply and install surveillance equipment with associated cable installation. Equipment may include video, door answering, intrusion detection, movement detection and monitoring.

**102 Related Work**

Co-ordinate and co-operate with the following trades:

| | |
|---|---|
| Floor construction | Electrical installation |
| Wall construction | Communications cabling |
| Ceiling construction | Finishing trades |

**103 Quality Assurance**

Perform work employing experienced tradespeople familiar with the quality of work required and who are AUSTEL-licensed in accordance with requirements of TS 009.
Arrange for a conference with relevant other trades to decide upon matters which affect them.

**104 References**

Comply with applicable portions of the following Australian Standards:

| | |
|---|---|
| AS/NZS 1367 2007 | Coaxial cable and optical fibre systems for the RF distribution of analog and digital television and sound signals in single and multiple dwelling installations. |
| HB 252 2007 | Communications Cabling Manual. |

**105 Submissions**

On request of the project manager, submit for approval any item related to the installation, including: data sheets on materials; wiring diagrams - plans; samples of products; licence certificates and obtain written approval of each item so requested.
Provide project manager with copies of minutes of pre-installation conference .

**106 Delivery, Handling and Storage**

Deliver, unload and store in a secure area, in accordance with manufacturer's instructions where applicable, to prevent damage, deterioration and loss.

**107 Warranty**

Provide a warranty covering aspects of required work of this trade section, for a period of not less than years from the date of Practical Completion.

## PART II MATERIALS

**201 Acceptable manufacturers**

**202 Materials**

A. Video Equipment:
B. Door answering;
C. Intrusion detection:
D. Movement detection:

**203 Cable Materials**

As recommended by supplier of equipment.

## PART III EXECUTION

**301 Examination**

Examine carefully the proposed route for cable installation and installation of other components. Obtain project managers approval before executing the work.
Ensure tasks and activities comply with the Act, Regulation, Code of Practice or Australian Standards, as relevant.
Start of work means total acceptance of conditions.

**302 Preparation**

Provide necessary safety or security controls where required to ensure safe practices and installations.
Provide needed penetration, openings, chases and structures for safe secure and effective installation of cable.
If installation is required in the electrical riser, co-operate with the electrician.

**303 Installation**

Refer to installation clauses for each item.

**304 Marking and Identification**

**305 Administration**

**306 Field Quality Control**

A. Where requested by supply authority supply test data obtainable from component manufacturer.

B. Arrange for inspections by component manufacturer's representative to ensure correct application, use and installation.

**307 Adjust and Clean**

Adjust installations of components to ensure proper fit and alignment.
Remedy items of inefficient operation or of doubtful performance.
Clean visible items to original condition.
Remove debris from installation in concealed spaces.

**308 Protection**

Protect installed items from damage from any source until Practical Completion.

**END OF SECTION**

## PART 1 GENERAL

### 101 Scope

A. Design, engineer, supply, install, test and commission a complete lift service for the described functions and in locations shown on drawings. Provide a warranty and maintenance schedule for each item installed.

B. This section of work includes but is not limited to all of the above for:
Lift service - hydraulic – passenger.
Lift service - passenger - servicing car park.
Lift service – goods.

C. Lift requirements.
Have 2 button fully collective control.
Have fully automatic levelling with a tolerance of +/- 12mm.
Be fitted with horizontally sliding centre opening doors of adequate fireproof rating.
Be smooth and quiet in operation.
Be in accordance with the current SAA Lift Code and the requirements of all authorities having jurisdiction over the works.

D. Schedule of required installation is provided on page 2 of this specification section.

### 102 Related Work

Co-ordinate and co-operate with other trades responsible for:

A. Construction of the lift shaft and ventilated lift motor room.
B. Forming lift motor floors to this contractor's drawings and/or directions.
C. Building in of inserts supplied by this contractor to this contractor's drawings and/or directions.
D. Building in of door frames after erection by this contractor.
E. Forming of sill supports.
F. Lighting to motor room.
G. Forming and making good of recesses at landings for car position indicators and call buttons.
H. The supply and installation of electrical MIMS submains to a point designated by this contractor in the plant room.
I. Guards to well openings.
J. Sign writing "DANGER" notices as instructed on lift motor supply room doors.
K. Supply and installation of lift floor finish.
L. Provision of fire protection (dry type sprinkler heads) within lift motor room.
M. Provision for a fire extinguisher to the satisfaction of the appropriate codes.
   1. Electric fans, luminaries and power outlets, including cabling, are to be supplied and installed by others
   2. Participate in pre-installation conferences arranged by mechanical engineer and comply with decisions made at each.

### 103 Quality Assurance

A. Materials supplied, installed and made fully operational are required to be of the best quality available.
B. Formal Quality Assurance procedures in accordance with the requirements of AS/NZS 9001 are mandatory.
C. Provide evidence with tender of means by which the above is to be implemented, together with tenderer's qualifications as required by 103 (b) above.
D. Take measurements at site during construction of structures related to installation of lifts. Report discrepancies to contractor if they occur.

### 104 References

Comply with applicable portions of the following Australian Standard.

| | |
|---|---|
| AS 1428 | Design for access and mobility.<br>1428.1 2009 General requirements for access – New building work.<br>*There are 5 other parts. 1992 – 2010.* |
| AS/NZS 1554 | Structural steel welding. *There are 7 parts, 1994 – 2012.* |
| AS 1735 | Lifts, escalators and moving walks. *There are several parts.* |
| AS/NZS 2311 2009 | Guide to the painting of buildings. |
| AS/NZS 4431 1996 | Guidelines for safe working on new lift installations in new constructions. |

Comply with requirements of statutory authorities having jurisdiction.

### 105 Submissions

A. Submit with tender data containing component manufacturer's description of material proposed for installation.

B. Provide fully detailed shop drawings when required in compliance with Document 00800 clause 27.
   1. Provide full and complete drawings of all the equipment that is proposed to be supplied and copies of all layout drawings. Submit for approval, detail drawings of manufactured items before manufacture commences. All drawings are to be approved in writing before work is commenced.

2. Submit all layout drawings, giving details of all access requirements and of any holes or items of equipment to be built, in sufficient time for approval and for the completion of such work.
3. Thoroughly check all shop drawings prior to submission as regards measurements, materials and details to satisfy himself that they conform to the intent of the drawings and specifications.
4. All checking and approving of shop drawings are to be construed as gratuitously assisting the contractor and approval is given for the manufacture without prejudice to the responsibility of the contractor for the errors or omissions which may exist thereon.
5. Approval of drawings is not to be construed as authorising variations or increased costs.
6. Where errors or omissions are discovered later, make good at the contractor's expense, irrespective of any prior approval.
7. The layout as shown on the architectural drawings is to be considered as diagrammatic and approximate only. Locate fittings to suit the actual equipment to be installed and building details.
8. Submit, when requested, quality control schedules and documents to be used in notification of quality of materials and installation.

C. Within 7 days of notification of acceptance of tender submit 3 copies of detail drawings showing:
1. Maximum loads and reactions on the building structure created by the movement of the lift, locations of bond blocks.
2. The location and dimensions of openings required in the lift motor room slab and at landings for call buttons and lift car position indicators.
3. The construction and details and dimensions of the lift cars, landing doors and the landing door frames and surrounds.
4. The location and apparatus required to be provided in the lift motor room for the installation, servicing and removal of the motor room plant, together with loads required to be handled by the foregoing equipment.
5. The extent of lift over runs top and bottom of the lift shaft.
6. The maximum electrical current per phase and neutral to be carried by the lift supply cable.
7. The minimum size of HRC fuse that will adequately carry peak loads without operation.
8. Terminal position of lift submains.

**106 Delivery Handling and Storage**

Arrange with contractor for delivery of equipment at times appropriate to meet installation schedules. Comply with decision made at pre-installation conference.
When installed, protect equipment from damage. Make good damage which does occur at no cost to the proprietor.

**107 Maintenance**

The contract maintenance period of the lift is to commence on the date on which the lifts are placed in regular service following the satisfactory completion of tests and final painting.
The contractor is to fully maintain the lifts in proper working order for a period of twelve (12) months from the above date, free of cost.
In the event of the maintenance proving unsatisfactory or if any breakage or serious defect occurring in any part of the equipment, or if unsatisfactory operation of the lift, the maintenance period is to be extended until such time as the lifts have been operated to the satisfaction of the consulting engineer for a period of one (1) calendar month.
Tenderers will include, as a separate item, the annual cost of a twenty (20) year comprehensive maintenance contract covering regular maintenance and breakdown calls made during normal working hours. The cost "out-of-hours" calls are to be charged separately. The maintenance contract is to commence immediately on the date of expiration of the free maintenance period. Full particulars of the maintenance agreement are to be supplied with tenders.

## PART II MATERIALS

**201 Lift Machines and Equipment**

Refer Schedule of required items which appears at the end of this document.

A. Traction Type
Details
1. The driving sheaves: accurately machined grooves to suit the lifting ropes. Driving mechanism to operate under maximum loading without overheating or vibration.
2. The bearings: not to leak oil and are to be dust-tight, self-lubricating and, where necessary fitted with oil level indicators.
3. The lift cars: propelled smoothly and to start and stop without vibration, noise or abrupt accelerations.
4. The brakes: fitted with adj table and renewable brake shoes. The brake to operate automatically upon activation of any of the electrical safety devices or failure of the main electrical supply. The brakes to be capable of stopping the lifts in a smooth manner. The safety brake gear to be capable of repeated operation without adjustment and operate without damage to, or distortion of; guide rails.

B. Hydraulic
The lift machines to comprise an integrated pump, oil tank and control valves unit, electric controls and, in shaft, hydraulic rams. The system to be free from leaks and smooth and quiet in operation.

**202 Levelling**

Fit each lift machine with accurate levelling devices, which are to operate on the main hoist motor progressively, so that the lift comes to a stop by progressive deceleration and without discontinuity.
The equipment is to level the lifts automatically and independently of operation by passengers and without the required tolerance independent of load, speed or stretch of rope.
The tenderer is required to set out in the schedule, the accuracy of levelling which he is prepared to guarantee. Any error in levelling under any condition, loading and regardless of direction of travel, is not to exceed +/- 12mm.

**203 Guides**

Lift cars and counterweights with roller type guide shoes. Pay particular attention to the sound isolation of guide and rollers from guest rooms in residential buildings.

**204 Well Equipment**

Guide Rails
Guide rails for both cars and counterweights: planed “T" section steel rails of sufficient rigidity to withstand such stresses as may be expected during both normal and emergency operation.
Fix the guide rails to the building to allow for the settling of the building and compression of columns and acoustically isolate from the building structure in the accommodation areas.
The counterweights frames: arrange so that fillers can be added or removed without disturbing the ropes.
The ropes: of a type specifically intended for duty, make provision for easy adjustment to ensure that equal tension is applied to all ropes.
Buffers for the lifts: of approved design.
The completed installation: quiet in operation and be designed with this in view. Determine the cause and eliminate, at contractor’s expense, any undue noise. No noise from the lift motor room and shaft may be audible on any of the occupied floors.
This contractor is required to carry out the well flushing and supply and install all necessary trimming beams.

**205 Lift Cars**

Refer Schedule of Required Items and drawings.

**206 Car and Landing Doors**

Flush panel centre bi-parting car and landing doors.
Provide “meat rail” type door suspension and track arranged and mounted to allow adjustment to ensure that doors are in correct alignment.
Provide door operating mechanism capable of operating the doors at the maximum speed permitted by the regulations without undue noise, vibration or shock.

**207 Landing Door Surrounds**

Provide the landing door surrounds with a one (1) piece welded door surround.
Set the frames plumb and true in the wall opening for grouting in by others.
Provide frames in public areas of a nonstandard profile and of special finish e.g. mirror stainless steel.

**208 Landing Indicators and Controls**

Supply over each landing door an approved illuminated indicator designed to show when a lift is about to stop at the floor and its direction of travel.
At the same time, the gong is to sound to attract the attention of the intending passengers. The indicators are to give sufficient advance warning to enable passengers to reach the landing doors prior to their actual opening.
Provide each with an "UP" and "DOWN', button, (except on terminals), which automatically illuminate to indicate that the call has been registered, and a digital display to indicate if lift is out of service.
Install the call button panel to the requirements of the BCA warning against the use of lifts in the event of fire.

**209 Controls**

Equip the lifts with fully automatic microprocessor controls. Where multiple lifts are arranged in a bank provide fully interconnected group control.
Software based which continuously monitors the lift traffic to automatically adjust the lift operation to provide minimum waiting intervals.

**210 Keys**

Provide 3 sets of keys to operate each type of key operated switch and lock associated with lifts.

**211 Lift Distribution Board**

Allow for terminations of 1 lighting circuit, 1 power sub-circuit and 1 ventilation sub-circuit. Supply and install 2 x No 1 phase and 1 x No 3 phase 20A circuit breakers on the lift distribution board for the before mentioned sub-circuits.
Fully co-ordinate with both electrical and mechanical contractors for this work.

**212 Performance Monitoring System**

Provide for the supply and installation of a complete remote monitoring system to detect irregularities in operating sequence and performance of lifts. Items and function required include but are not limited to:

A. Diagnose lift performance.
B. Detect developing faults.
C. Pinpoint maintenance needs.
D. Record intermittent faults.
E. Provide a record of events leading up to a fault, or unsatisfactory performance.
F. Provide notification of lift failure.
G. Relay an alarm signal in the event of someone being trapped in the lift.
H. High level interface with BAS system.

Tenderers are to submit full monitoring details of the proposed system on the Tender Form.

**213 Access Control**

Supply and install in each hotel lift a magnetic card reader to allow access to secured or restricted floors. The placing or removal of lifts on security or restriction is to be by the BAS and the performance monitoring interface, as well as the engineers P.C.

**214 Fireman's Control**

Arrange all lifts for fireman's control in accordance with the regulations.

**215 Shop Fabrication**

General: design fabricated items so that possible work is done before delivery. Fully protect for shipment. Take possible care to prevent damage.

A. Welding External Items: conform to the recommendations of AS/NZS 1554, noting particularly the design criteria.
B. Flanges: concealed where possible. Sleeve connecting railings inside railing sections and secure with flush or set screws. Except where access is impossible, connection screws and bolts will be on the underside of joints.
C. Fasteners on the top of railing sections will not be permitted.
D. Weld shop connections for steel fabrications, and bolt field connections.
E. Provide smooth finishes to exposed surfaces with sharp well-defined lines and arrises. Mill to a close fit machined joints. Design necessary lugs, brackets and similar items so that work can be assembled and installed in a neat, substantial manner.
F. Provide ample strength and stiffness by using appropriate metal thickness of assembly and supports.
G. Provide holes and connections as required to accommodate the work of other trades and for site assembly of metalwork. Drill or punch and ream in the shop.

**216 Miscellaneous**

Fasteners: provide required bolts, screws, inserts, fasteners, templates and other accessories required for a complete installation.

Co-ordinate with other trades as to the proper fastening systems suitable for the substrates to which the item is to be secured. Refer to project manager if in doubt.

Fasten galvanised items with galvanised fasteners.

## PART III EXECUTION

**301 Examination**

Inspect site conditions before fabrication, where possible, and before delivery of materials. Ensure conditions are satisfactory for installation. Arrange for rectification required.

Ensure tasks and activities comply with the Act, Regulation, Code of Practice or Australian Standards, as relevant.

Start of work means total acceptance of relevant conditions.

**302 Preparation**

A. Field measurements: do not delay job progress. Allow for adjustments and fitting of the work in the field where taking of measurements might cause delay.
B. Co-ordination with work of others: furnish to each relevant trade foreman anchorages and setting drawings, diagrams, templates and instructions for installation of items having integral anchors which are to be embedded in concrete or masonry construction. Co-ordinate delivery of such items to the project site.

**303 Inspection and Reinstatement**

A. Check fabrications as they are unloaded at the project site for evidence of physical damage.
   1. Treat damaged fabrications as follows:
      Damage through galvanising: perform immediate inorganic zinc silicate paint or cold-galvanising repair. Do not install until reinstated.
   2. Architectural metalwork: returned to shop for repair or replacement.
B. Verify anchors, bolts and other required anchorage items for proper size and accurate location prior to erection.

**304 Installation**

A. Anchorage: except for anchorages furnished herein but placed by other trades, set and secure necessary anchorages, including concrete and masonry inserts, bolts, wood screws and other connectors as needed. Perform cutting, drilling and fitting as needed, locating anchorages and holes to ensure proper positioning of completed work.

B. Fit: during installation and assembly, form tight joints with exposed connections accurately fitted, and reveals uniform. Finish work accurately, plumb, level, square and true in reference to adjacent construction. Make tolerances conform to Australian Standards.

C. Finish: do not cut or abrade shop finishes which cannot be completely restored in the field.
The use of gas-cutting torch in the field for correcting fabrication errors will not be permitted.
Fabrications may be cut shorter with power hacksaws on site.
Isolate dissimilar metals likely to be subject to moisture with inert materials, not visible on completion of installation.

D. Install equipment to the satisfaction of the project manager and consulting engineer.

**305 Field Quality Control**

When requested arrange for the manufacturer of products to instruct installers regarding correct installation.

**306 Protection**

Cover work: immediately following installation, wrap or cover architectural metalwork to avoid wear and tear of finish during subsequent construction.

**307 Painting**

Paint machinery and equipment installed in lift motor room which has not been painted by component manufacturer.
Paint system for steel.
2 coats metal primer (zinc rich).
2 coats full gloss acrylic or alkyd.
Stainless steel is not to be painted.
Comply with AS/NZS 2311 Guide to the painting of buildings, and the paint manufacturer's instructions.

**308 Commissioning**

Perform each test necessary to prove that each item of equipment performs as intended by the manufacturer and the consulting engineer. Include the supply of necessary standard test weights. Repeat tests on items which fail to perform as required until approval is achieved.
Provide required calculations certifications etc. to the satisfaction of statuary authorities.

**309 Cleaning**

Clean materials installed to the satisfaction of the consulting engineer.
Remove temporary protective coatings.

**310 Completion**

Complete contracted work in accordance with contract documents and written variation orders issued by the consulting engineer.

**END OF SECTION**

## PART I GENERAL

### 101 Scope

A. Design, engineer, supply, install, test and commission a complete mechanical car parking to Australian or Australian-approved standards for the described functions and in locations shown on drawings. Provide a warranty and maintenance schedule for each item installed.

B. This section of work includes but is not limited to all of the above for:
   1. Mechanical Car Parking – hydraulic/electric – Dependent Mechanical Parkers
   2. Mechanical Car Parking – hydraulic/electric – Independent Mechanical Parkers
   3. Mechanical Car Parking – hydraulic/electric – Semi-Automatic Mechanical Parkers
   4. Mechanical Parking – Fully automated machines – no Passengers
   5. OTHER.

C. Mechanical Parker requirements.
   1. Comply with all statutory and other legal requirements for the location of installation.
   2. Comply with BCA and/or disabled access provisions so as to ensure compliance.
   3. Have a dead man key control switch or programmed access key fob/card with emergency stop.
   4. Have mechanical safety devices to protect against hydraulic failure.
   5. Be fitted with horizontally sliding gates or roller doors as required with a level of visual transparency.
   6. Be smooth and reasonably quiet in operation.
   7. Be in accordance with the current DIN EN 14010.

D. Schedule of required installation is provided on page 2 of this specification section.

### 102 Related Work

Co-ordinate and co-operate with other trades responsible for:

A. Construction of the mechanical parking pit and any enclosure as required.
B. Forming Mechanical Parker floors to this contractor's drawings and/or directions.
C. Building in of inserts as required by this contractor to this contractor's drawings and/or directions.
D. Building in vehicle entry cabin as required after erection by this contractor.
E. Forming of pits, pit edge supports, drainage sumps.
F. Lighting to mechanical parking zones.
G. Forming and making good of recesses as required at landings for indicators and call buttons.
H. The supply and installation of electrical MIMS submains to a point designated by this contractor in the plant room.
I. Guards to pit openings.
J. Sign writing "DANGER" notices as instructed on any access doors to the vehicle storage areas of fully automated machines.
K. Supply and installation stormwater drainage system.
L. Provision of fire protection (dry type sprinkler heads) within Mechanical Parker configuration or any motor room required.
M. Provision for a fire extinguisher to the satisfaction of the appropriate codes.
   1. Electric fans, luminaries and power outlets, including cabling, are to be supplied and installed by others.
   2. Participate in pre-installation conferences arranged by mechanical engineer and comply with decisions made at each.
N. Forming of ramps and access paths.
O. Provision of vehicle lifts.
P. Comply with requirements indicated in DOCUMENT 00819 OHS & ENVIRONMENTAL REQUIREMENTS.

### 103 Quality Assurance

A. Materials supplied, installed and made fully operational are required to be of the best quality available.
B. Formal Quality Assurance procedures in accordance with the requirements of AS/NZS 9001 or DIN EN 14010 are mandatory.
C. Provide evidence with tender of means by which the above is to be implemented, together with tenderer's qualifications as required by 103 (b) above.
D. Take measurements at site during construction of structures related to installation of Mechanical Parkers. Report discrepancies to contractor if they occur.

### 104 References

Comply with applicable portions of the following Australian Standard.

| | |
|---|---|
| AS 1319 1994 | Safety signs for the occupational environment. |
| AS 1428 | Design for access and mobility. |
| | 1428.1 2009 General requirements for access – New building work. |
| | *There are 5 other parts. 1992 – 2010.* |
| AS/NZS 2890.1:2004 | Parking facilities – Off street car parking. |
| AS/NZS 2311 2009 | Guide to the painting of buildings. |

AS/NZS 3000 2007 Electrical Installation (known as the Australian/New Zealand Wiring Rules).*There are 2 Amdts, 2012.*
AS/NZS 3012 2010 Electrical installation – Construction and demolition sites.
Comply with applicable portions of the following European Standard:
DIN EN 14010 Equipment for power driven parking of motor vehicles.
EU Machinery Directive (98/37/EEC).
Comply with requirements of statutory authorities having jurisdiction.

**105 Submissions**

A. Submit with tender data containing component manufacturer's description of material proposed for installation.

B. Provide fully detailed shop drawings when required in compliance with Document 00800 clause 27.
   1. Provide full and complete drawings of all the equipment that is proposed to be supplied and copies of all layout drawings. Submit for approval, detail drawings of manufactured items before manufacture commences. All drawings are to be approved in writing before work is commenced.
   2. Submit all layout drawings, giving details of all access requirements and of any holes or items of equipment to be built, in sufficient time for approval and for the completion of such work.
   3. Thoroughly check all shop drawings prior to submission as regards measurements, materials and details to satisfy himself that they conform to the intent of the drawings and specifications.
   4. All checking and approving of shop drawings are to be construed as gratuitously assisting the contractor and approval is given for the manufacture without prejudice to the responsibility of the contractor for the errors or omissions which may exist thereon.
   5. Approval of drawings is not to be construed as authorising variations or increased costs.
   6. The layout as shown on the architectural drawings is to be considered as diagrammatic and approximate only. Locate fittings to suit the actual equipment to be installed and building details.
   7. Submit, when requested, quality control schedules and documents to be used in notification of quality of materials and installation.

C. Within 7 days of notification of acceptance of tender submit 3 copies of detail drawings showing:
   1. Maximum loads and reactions on the building structure created by the movement of the Mechanical Parker, locations of bond blocks.
   2. The location and dimensions of openings required in the lift motor room slab and at landings for call buttons and lift car position indicators.
   3. The construction and details and dimensions of the platforms, any gates, landing doors and the landing door frames, and surrounds.
   4. The location and apparatus required to be provided in the control room for the installation, servicing and removal of the control room plant, together with loads required to be handled by the foregoing equipment.
   5. The extent of the required dimensions of spaces required for pits, vehicle storage areas and equipment.
   6. The maximum electrical current per phase and neutral to be carried by the particular system.
   7. The minimum size of HRC fuse that will adequately carry peak loads without operation.
   8. Terminal position of Mechanical Parker submains.

D. Develop and submit to person in control of workplace copies of all required OHSE documentation, that is specific to the project and its hazard and risk profile, including, as a minimum, OHSE Management plan, OHSE Hazard and risk assessment, OHSE safe work method statement, training, supervision, induction, inspections and recording of findings and corrective actions and any incident reporting and investigation caused by the undertaking of the works at the construction location or in transit from manufacture to construction site.

**106 Delivery Handling and Storage**

Comply with all OHSE requirement relating to delivery handling and storage of plant and equipment in compliance with legal, other and client requirements
Arrange with contractor for delivery of equipment at times appropriate to meet installation schedules. Comply with decision made at pre-installation conference.
When installed, protect equipment from damage. Make good damage which does occur at no cost to the proprietor.

**107 Maintenance**

Comply with all OHSE requirements relating to maintenance of plant and equipment in compliance with legal, other and client requirements.
The contract maintenance period of the Mechanical Parker is to commence on the date on which the Mechanical Parkers are placed in regular service following the satisfactory completion of tests. The contractor is to fully maintain the Mechanical Parkers in proper working order for a period of twelve (12) months from the above date, free of cost. In the event of the maintenance proving unsatisfactory or if any breakage or serious defect occurring in any part of the equipment, or if unsatisfactory operation of the lift, the maintenance period is to be extended until such time as the Mechanical Parkers have been operated to the satisfaction of the consulting engineer for a period of one (1) calendar month.

Tenderers will include, as a separate item, the annual cost of a twenty (20) year comprehensive maintenance contract covering regular maintenance and parts and breakdown calls. The maintenance contract is to

commence immediately on the date of expiration of the free maintenance period. Full particulars of the maintenance agreement are to be supplied with tenders.

## PART II MATERIALS

**201 Mechanical Car Parking and Equipment**

Refer Schedule of required items which appears at the end of this document.
Hydraulic: the lift machines to comprise an integrated pump, oil tank and control valves unit, electric controls and, in-shaft, hydraulic rams. The system to be free from leaks, and to be smooth and quiet in operation.

**202 Gates and Doors**

Provide door suspension and track arranged and mounted to allow adjustment to ensure that doors are in correct alignment.
Provide door operating mechanism capable of operating the doors without undue noise, vibration or shock.

**203 Materials Operating Controls**

Supply machines accordingly with either clear marked key switch controls or user interface panels located centrally to the machines with clear visual surveillance of the surrounds and located in a safe and clear position away from moving parts.

**204 Keys**

Provide 1 set of keys to operate each type of key-operated switch and lock associated with machines.

**205 Lift Distribution Board**

Allow for terminations of 1 lighting circuit, 1 power sub-circuit and 1 ventilation sub-circuit. Supply and install 2 x No 1 phase and 1 x No 3 phase 20A circuit breakers on the Mechanical Parker distribution board for the before-mentioned sub-circuits.
Fully co-ordinate with both electrical and mechanical contractors for this work.

**206 Performance Monitoring System – Fully Automated Systems Only**

When required provide for the supply and installation of a complete remote monitoring system to detect irregularities in operating sequence and performance of Mechanical Parker. If requested tenderers are to submit full monitoring details of the proposed system on the Tender Form.

**207 Fireman's Control**

Arrange all Mechanical Parkers for fireman's control in accordance with the regulations.

**208 Shop Fabrication**

General: design fabricated items so that possible work is done before delivery. Fully protect for shipment. Take all possible care to prevent damage.

A. Welding External Items: conform to the recommendations of AS/NZS 1554, noting particularly the design criteria.
B. Flanges: concealed where possible. Sleeve connecting railings inside railing sections and secure with flush or set screws. Except where access is impossible, connection screws and bolts will be on the underside of joints.
C. Fasteners on the top of railing sections will not be permitted.
D. Weld shop connections for steel fabrications, and bolt field connections.
E. Provide smooth finishes to exposed surfaces with sharp well-defined lines and arrises. Mill to a close fit machined joints. Design necessary lugs, brackets and similar items so that work can be assembled and installed in a neat, substantial manner.
F. Provide ample strength and stiffness by using appropriate metal thickness of assembly and supports.
G. Provide holes and connections as required to accommodate the work of other trades and for site assembly of metalwork. Drill or punch and ream in the shop.

**209 Queuing Times**

System to be designed so as not to unnecessarily create queuing risk in accordance with AS 2890.1 – 2004.

**210 Vehicle Access**

Vehicle entry and exit to parking platform to only be from the same point of access.

**211 Platform Surface**

The finished platform surface to be designed as a continuous impervious surface that allows the appropriate drainage of discharged fluids to a safe discharge point whilst preventing any leakage onto any vehicle, platform or accessible space allocated below it.

**212 Platform Deflection**

Deflection of platforms when loaded with vehicles to be engineered and restricted to +50mm to ensure specified vehicle heights are not compromised.

**213 Miscellaneous**

Fasteners: provide required bolts, screws, inserts, fasteners, templates and other accessories required for a complete installation.
Co-ordinate with other trades as to the proper fastening systems suitable for the substrates to which the item is to be secured. Refer to project manager if in doubt.
Fasten galvanised items with galvanised fasteners.

## PART III EXECUTION

**301 Examination**

Inspect site conditions before fabrication, where possible, and before delivery of materials. Ensure conditions are satisfactory for installation. Arrange for rectification required.
Ensure tasks and activities comply with the Act, Regulation, Code of Practice or Australian Standards, as relevant.
Start of work means total acceptance of relevant conditions unless agreed otherwise.

**302 Preparation**

A. Field measurements: do not delay job progress. Allow for adjustments and fitting of the work in the field where taking of measurements might cause delay.
B. Co-ordination with work of others: furnish to each relevant trade foreman anchorages and setting drawings, diagrams, templates and instructions for installation of items having integral anchors which are to be embedded in concrete or masonry construction. Co-ordinate delivery of such items to the project site.

**303 Inspection and Reinstatement**

A. Check fabrications as they are unloaded at the project site for evidence of physical damage.
   1. Treat damaged fabrications as follows:
      Damage through galvanising: perform immediate inorganic zinc silicate paint or cold-galvanising repair. Do not install until reinstated.
   2. Architectural metalwork: returned to shop for repair or replacement.
B. Verify anchors, bolts and other required anchorage items for proper size and accurate location prior to erection.

**304 Installation**

Comply with all OHSE requirement relating to the installation of plant and equipment in compliance with legal, other and client requirements.

A. Anchorage: except for anchorages furnished herein but placed by other trades, set and secure necessary anchorages, including concrete and masonry inserts, bolts, wood screws and other connectors as needed. Perform cutting, drilling and fitting as needed, locating anchorages and holes to ensure proper positioning of completed work.
B. Fit: during installation and assembly, form tight joints with exposed connections accurately fitted, and reveals uniform. Finish work accurately, plumb, level, square and true in reference to adjacent construction. Make tolerances conform to Australian Standards.
C. Finish: do not cut or abrade shop finishes which cannot be completely restored in the field. The use of gas-cutting torch in the field for correcting fabrication errors will not be permitted.
   Fabrications may be cut shorter with power hacksaws on site.
   Isolate dissimilar metals likely to be subject to moisture with inert materials, not visible on completion of installation.
D. Install equipment to the satisfaction of the project manager and consulting engineer.

**305 Field Quality Control**

When requested arrange for the manufacturer of products to instruct installers regarding correct installation.

**306 Protection**

Cover work: immediately following installation, wrap or cover architectural metalwork to avoid wear and tear of finish during subsequent construction.

**307 Commissioning**

Perform each test necessary to prove that each item of equipment performs as intended by the manufacturer and the consulting engineer if applicable. Include the supply of necessary standard test weights. Repeat tests on items which fail to perform as required until approval is achieved.
Provide required calculations certifications etc. to the satisfaction of statuary authorities.

**308 Cleaning**

Clean materials installed to the satisfaction of the consulting engineer.
Remove temporary protective coatings.

**309 Completion**

Complete contracted work in accordance with contract documents and written variation orders issued by the consulting engineer.

**END OF SECTION**

## PART I GENERAL

**101 Scope**

The work of this trade section includes but is not limited to, supplying and installation of floor drains built into impervious floors and roofs of concrete or other materials. Connect floor drains to the piped waste water system.

**102 Related Work .**

Co-ordinate and co-operate with the following trades:
Concrete floor construction
Other floor construction
Floor finishes, e.g. Ceramic Tile
Storm Drainage
Sanitary Sewerage

**103 Quality Assurance**

Engage tradesmen whose experience and skills meet the requirements of any controlling statutory authorities.
Comply with regulations of the authority.

**104 Reference Standards**

Comply with applicable portions of the following Australian Standards:

| | | |
|---|---|---|
| AS/NZS 3500 | Plumbing and drainage. | |
| | 3500.3 2003 | Stormwater drainage. *Plus 3 Amdts, 1996 - 2012.* |
| | 3500.3.1 1998 | Stormwater drainage - Performance requirements. |
| | 3500.5 2012 | Housing installations. *Plus 4 Amdts, 2002 - 2012* |
| | *There are several parts, 1996 – 2003.* | |

Comply throughout with the current edition of the Building Code.

**105 Submissions**

Before ordering materials, submit product data to the project manager, particularly where alternatives to the specified material is offered.

**106 Warranty**

Provide copies of manufacturer's warranty covering materials and a year warranty from the installer of components.

**107 Fees**

Pay all fees to the relevant statutory authorities.

## PART II MATERIALS

**201 Acceptable Manufacturers**

Stormtech Pty Ltd, Tel: (02) 4423 1989.
Refer www.stormtech.com.au. Email, info@stormtech.com.au.
Refer www.aquadux.com.au.
Alternatives may be offered.

**202 Materials**

**203 Equipment**

Provide necessary equipment required by manufacturer and/or installer. Include seals, jointing materials etc.

## PART III EXECUTION

**301 Examination**

Visit the site before delivery of materials, and compare conditions with those shown on drawings.
Ensure tasks and activities comply with the Act, Regulation, Code of Practice or Australian Standards, as relevant.
Start of work means total acceptance of all conditions.

**302 Installation**

Subsurface pipes and other items.
Place the materials and secure to formwork. Comply with AS 3500.3.1. Allow for falls of pipe and channel drains. Ensure that formwork stays intact during concrete pour.
Co-operate with other trades affected by this work.
Comply with manufacturer's written instructions and those of statutory authorities.

Connect outlet pipes from the installation to the stormwater pipe system.

**303 Testing**

Before pouring concrete, test the arrangement of drainage channels and pipes for full drainage of the system in the presence of an inspector from the relevant authority or the project manager.

**304 Floor Installation**

Construct the floor around the drainage system with care.
Ensure that the finished floor level is flush with the top of the floor channel, grilles etc., so that no water will lie on the floor surface.

**305 Cleaning**

On completion, remove all debris and clean all visible work to the project manager's satisfaction.

**306 Completion**

Complete all contracted work in accordance with the contract documents and written variation orders issued by the project manager.

**END OF SECTION**

## PART I GENERAL

### 101 Scope

A. Installation of a new sprinkler system. Design, supply and install automatic sprinkler system including but not limited to main supply, distribution pipes, isolating valves, sprinkler heads, fire indicator panel, connection to fire brigade, flow switches and other essential equipment.

B. Alterations to existing sprinkler system. Design, supply, removal and repositioning of pipe branches, valves, sprinkler heads and each required item for execution of the work.
Advise the building superintendent and fire brigade in writing of the extent of and period the system will be out of service.

### 102 Related Work

Co-ordinate and co-operate with the following trades:

| | |
|---|---|
| Water supply | Fire hydrants and hose reels |
| Concrete floors | Suspended Ceilings |
| Plasterboard | Electrical Installation |

Provide a unit cost in tender to isolate and reinstate the FIP and appropriate circuits. Cost to include advice to authorities.

### 103 Quality Assurance

Perform the work of this trade section using skilled tradespeople whose training complies with the requirements of the controlling statutory authority.

### 104 Reference Standards

Comply with applicable portions of the following Australian Standards:

| | |
|---|---|
| AS 1074 1989 | Steel tubes and tubulars for ordinary service. |
| AS 1851 2012 | Routine service of fire protection systems. |
| AS 2118 | Automatic fire sprinkler systems.<br>2118.1 General systems.<br>*There are 8 other parts plus 2 Amdts, 1995 – 2012* |
| AS 4118 | Fire sprinkler systems. *There are 9 parts, 1994 – 1999. Plus 1 Amdt 2005.* |
| ATS 5200.486 2008 | Technical specification for plumbing and drainage products – Sprinklers for home applications. |

Comply also with:
Building Code of Australia.
Statutory authority requirements.
Fire brigade requirements.
Independent fire protection services organisation.
Building surveyor.

### 105 Delivery, Handling and Storage

Deliver materials when required for installation. Minimise on-site storage. Handle with care. Damage to existing materials and surfaces of the building are to be made good, to the satisfaction of the project manager without cost to the proprietor.

### 106 Fees

Pay required fees to the relevant statutory authorities.

### 107 Drawings

A. Drawings provided for sprinkler installation are diagrammatic and do not show all structural and architectural details.
Before ordering materials, measure and record accurate dimensions on site.

B. Prepare shop drawings and submit for approval prior to fabrication. Comply with Document 00800, clause 27.

C. Provide two sets of “as-built” drawings of the completed work on the CAD disk provided by the project manager or engineer for this purpose.

### 108 Site Access

Use access and entrances nominated for the purpose by the site superintendent. Do not use other access.

### 109 Warranty

Provide the proprietor with warranties covering:

A. Materials: in the form supplied by manufacturers of specified components.

B. Installation: complete installation for year(s) from the date of Practical Completion.

## PART II MATERIALS

**201** Acceptable Manufacturers
Acceptable manufacturers of each component type are required to submit written evidence of statutory authority approval of their equipment.

**202 Materials**

A. Independent water supply from main:
B. Main valve:
C. Flow switch, connected to fire brigade:
D. Piping: black steel to AS 1074 with one coat of zinc rich paint.
E. Pipe supports (galvanised steel).
F. Sprinkler heads (METAL, GLASS OR SILICONE BULB)
G. Sleeves:
   1. for pipes through walls: 1.6mm galv. steel or UPVC.
   2. for pipes through concrete floors: galv. Steel.
   3. extending 100 mm above top of floor.

   Allow 25mm space between pipe and sleeve.
H. Fill with high density mineral wool.
I. Fire indicator panel.

## PART III EXECUTION

**301 Examination**
Visit the site before delivery of materials, and compare conditions with those shown on drawings.
Ensure tasks and activities comply with the Act, Regulation, Code of Practice or Australian Standards, as relevant.
Start of work means total acceptance of conditions. Refer Clause 108 above.

**302 Connections to Supply**
Connect to existing water supply Co-ordinate with cold water supply Plumber.

**303 Fire Precautions**

A. In making alterations to an existing sprinkler system, comply strictly with the requirements of AS 2118.1 and AS 1851.
B. Before making alterations to the sprinkler system, notify the proprietor and the Fire Brigade before turning off supply valve. Restore to operation on completion of work each day or if work ceases at the site for any reason.

**304 Fabrication and Jointing**
Shop fabricate components where possible and provide threaded pipe junctions. Where welding is unavoidable, comply with current, relevant Australian Standard to achieve safe welding practice. Use fire blanket to prevent damage to materials. Only certificated welders may perform welding.

**305 Installation**

A. Install all components to the project manager's and the authority's approval, to applicable Australian Standards and to the manufacturer's instructions.
   1. Co-ordinate with other trades, particularly where pipes pass through other elements of the building and plan relevant work to produce the whole installation in proper sequence.
   2. Ensure that interfaces are of appropriate size and type and are properly sealed.
   3. Seal penetrations as needed to achieve a watertight installation. Refer to the warranty clause 109.
   4. Provide and fix expansion joints at positions indicated on drawing and as required by the authority.
   5. Water Hammer: take precautions to prevent water hammer and rectify it where it occurs.
B. Sprinkler Pipes and Heads:
   1. Piping shall run at least 200mm above the ceiling suspension to enable installation of light fittings.
   2.
   3. Notwithstanding the design shown on the drawings, ensure new and relocated sprinkler heads are clear of full height door swings and are not within 2 metres of existing sprinkler heads and comply with Section 5 of AS 2118.
   4. Allow to supply and install additional sprinkler heads complete with escutcheon plate, arm pieces and hangers including draw down and re-instating of system as shown.
   5. Upon completion of the works, allow for the system to be certified by an independent approved certifier confirming conformity to the relevant Australian Standard.

   Allow to provide necessary test certificates, hydraulic calculations etc. for approval of alteration works to the sprinkler system.
C. Reticulation:
   1. Reticulate as indicated on the drawings throughout the building.

2. Provide isolating valves with stuffing boxes of appropriate diameter where indicated on drawings at branches to fixtures or groups of fixtures.
3. Co-ordinate the work of lining up services with other trades.
4. Where joints are required between piping and screwed fittings, provide suitable teflon tape.

**306 Testing and Commissioning**

A. Pressure test pipe installation in accordance with rule 7.2 of AS 2118, witnessed by the consulting engineer. Obtain certificate of satisfactory completion before ceiling is installed or enclosed in a duct.

B. Arrange for a second test and inspection after all work is finished so that the engineer can issue a completion certificate.
Should a part of the installation fail to pass a test by the services certifying organisation, correct the fault and arrange for further inspection until satisfactory.

**307 Protection**

Protect all work of this trade section from damage until Practical Completion is achieved.

**308 Cleaning**

On completion, remove all debris and clean all visible work to the project manager's satisfaction.

**309 Completion**

Complete all contracted work in accordance with contract documents and written variation orders issued by the project manager.

**END OF SECTION**

## PART I GENERAL

**101 Scope**

The work of this trade section includes but is not limited to, supplying and fixing of a complete system of hydrants and hose reels, including all associated isolating valves, stop taps and outlets to connect the following items:
Hydrant and hose reel service
Builder is to provide:
Penetrations and associated constructional works.

**102 Related Work**

Co-ordinate and co-operate with the following trades:
Sewerage and drainage
Metal cabinets Water distribution.

**103 Quality Assurance**

Perform the work of this trade section using tradesmen whose experience and skills meet the requirements of any controlling statutory authority.
Comply with regulations of the authority and recent changes in the NCC.

**104 Reference Standards**

Comply with applicable portions of the following Australian Standards:

| | | |
|---|---|---|
| AS/NZS 1221 1997 | Fire hose reels. *There is 1 Amdt, 2003.* | |
| AS 1851 2012 | Maintenance of fire protection equipment.. | |
| AS 2419 | Fire hydrant installations. | |
| | 2419.1 2005 | System design, installation and commissioning. *Plus Amdt, 2007.* |
| | 2419.2 2009 | Fire hydrant valves. |
| | 2419.3 2012 | Fire brigade booster connections. |
| AS 2441 2005 | Installation of fire hose reels. *Plus 1 Amdt, 2009.* | |

**105 Warranty**

Provide the proprietor with warranties covering:
A. Material: in the forms supplied by manufacturers of specified components.
B. Installation, for years from the date of Practical Completion: the complete piping installation and the specified components to which it is connected.

**106 Fees**

Pay all fees to the relevant statutory authorities.

**107 As-Built Drawings**

At Practical Completion, complete and supply copies of all installation drawings correctly brought up to date to present true and actual representation of the actual installation and to a scale of not less than one to a hundred.
Include the following in these drawings:
Complete piping layout drawings showing the actual size and locations of all water and other lines applicable to the system.
The hydraulic services subcontractor is to keep a complete set of the contract drawings and specifications on site with all latest amendments, revisions and the like.
As the work progresses, the sub-contractor is to make all deviations from the contract drawings thereon, due to site conditions, variations and other reasons, keeping an accurate record of work as installed.

## PART II MATERIALS

**201 Acceptable Manufacturers**

Ensure that all items to be installed are approved for installation by local authorities before ordering.
Approved manufacturers are:

**202 Materials**

The domestic cold water reticulation comprises generally the branched extension from the fire service and reticulated as shown on the drawings.
A. Tubing for cold water
   1. Material:
   2. Diameter: as shown on drawings.
B. Hose reels
   1. Material:
   2. Hose diameter: length:

3. Nozzles:

C. Hose reel cabinets

1. Material:
2. Painting and lettering to comply with regulations.
3. Allow for inspection by the engineer before concealing any work.
4. Painting and lettering to comply with regulations.

**203 Pipe Supports**

Conceal all pipes where possible within walls.
Ensure that no pipe movement except expansion or contraction can occur.
Cause no damage to structural capacity of structural elements.

**204 Pipe Penetrations**

Sleeves where pipes pass through walls: galvanised 1.6mm steel or UPVC.
Through floor slabs, galvanised steel extending 100 above top of floor.
Allow for 25mm space between pipe and sleeve, fill with high density mineral wool or fibre glass insulation.

**205 Internal Reticulation**

Reticulate as indicated on the drawings throughout the building.
Provide stop valves with stuffing boxes of appropriate diameter where indicated on drawings at branches to fixtures or groups of fixtures.
Co-ordinate the work of lining up services with other trades.
Where joints are required between piping and screwed fittings, provide suitable teflon tape.

**206 Fire Hydrant and Hose Reel System**

General: provide fire service complete with necessary piping, valve branches, fittings and relevant hydrant and hose reel.
Excavate for, provide and connect to mains tapping as indicated on the drawings, complete with branch for domestic supply.
Excavate for service piping and fittings indicated.
Pipes below ground: minimum of 600mm cover. Under vehicular traffic: minimum 750 mm.
Install valves of sizes shown. Provide cast iron covers over external valves.
Conform to the requirements of AS/NZS 1221.

## PART III EXECUTION

**301 Examination**

Visit the site before delivery of materials, and compare conditions with those shown on drawings.
Ensure tasks and activities comply with the Act, Regulation, Code of Practice or Australian Standards, as relevant.
Start of work means total acceptance of all conditions.

**302 Connections to Supply**

Arrange with the supply authority, obtain and install any required meter equipment complete with meter housing, and connect in accordance with the authority's requirements.

**303 Below Ground Installation**

Prepare trenches or openings and lay pipes at approved depth on approved base material. On completion, back-fill with approved material and cover with approved material and consolidate as required by the statutory authority and the project manager.
Maintain required distances between pipes of different sorts and pipes and the structure.

**304 Fabrication and Jointing**

Fabricate and join all components to the project manager's and the authority's approval, to applicable Australian Standards and to the manufacturers' instructions. Refer clause 202.

**305 Installation**

Install all components to the project manager's and the authority's approval, to applicable Australian Standards and to the manufacturer's instructions.
Do not expose pipes in external walls.
Co-ordinate with other trades, particularly where pipes pass through other elements of the building and plan all relevant work to produce the whole installation in proper sequence.
Ensure that all interfaces are of appropriate size and type and are properly sealed.
Seal penetrations as needed to achieve a watertight installation. Refer to the warranty clause 106.
Provide and fix expansion joints to all positions indicated on drawing and as required by the authority.
Water hammer: take all precautions to prevent water hammer and rectify it where it occurs.

**306 Testing and Commissioning**

A. This section of the specification covers the testing and commissioning requirements. Comply with AS 2419.1.

1. Provide all necessary competent personnel and equipment to carry out testing and commissioning of the installations covered by this specification.
2. Carefully pre-plan and schedule all tests to ensure that they are co-ordinated with the work of other contractors and sub-contractors involved and that they are carried out in a safe and efficient manner with the minimum of inconvenience to all concerned.
3. Where the work is being carried out in an occupied or partially occupied building, take the responsibility to advise the owners and/or management of the building regarding the nature of the tests and co-ordinate with them to minimise any possible hazards or inconvenience that may arise due to the tests. In addition, give notification at least three (3) days in advance of carrying out any tests so that a representative may observe the test.
4. Carry out all tests required by statutory authorities to prove that the systems operate to their satisfaction and in accordance with the appropriate codes and regulations.

B. Pre-commissioning procedures: prior to commencement of the commissioning of the systems, carry out the following procedures:
1. Pressure test all water systems to 1400 kPa for a period of two hours.
2. Thoroughly clean out and flush out all water systems to ensure only clean water is within the system.

C. Commissioning:
1. General: carry out all commissioning tests necessary to put the system into commercial use and to approval before Practical Completion is granted.
2. Check and adjust to the design duties, each item of equipment individually, each service and each complete system as a whole.
3. Permanently mark final settings of all regulating valves in an appropriate manner.

D. Test and installation instruments: supply for the duration of the tests all instruments and appliances necessary to complete the performance tests specified.
1. Gauges, instruments and materials provided as permanent parts of the installation, may be used during performance testing.
2. Have checked for accuracy by the manufacturer or an approved laboratory all test instruments proposed for use during performance testing.
3. Provide calibration certificates for each of the instruments to be used prior to the commencement of tests.

E. Performance tests: in addition to the commissioning requirements to above, carry out performance tests and carry out any necessary final adjustments arising therefrom at a time to be nominated during the maintenance and guarantee period or, in the event of failure of the installation to meet the minimum requirements of the specification, such extended period as may be permitted.

F. Replace any section or part which fails the tests.
Re-install and repeat test.

G. Post-contract drawings:
1. After consultation with the consulting engineer for correct presentation and content of "as built" drawings, the sub-contractor is to supply a full set of prints of these documents to the engineer through the builder for approval, within 30 days of Practical Completion.
2. Do not use shop drawings as record drawings or "as built" drawings unless suitable.
3. Do not make reference on record drawings or "as built" drawings to any item as being supplied and for installed "by others".
4. Upon approval of these record drawings, the hydraulic services subcontractor is to present the drawings in the following formats and quantities to the consulting engineer:
5. One set of full-sized transparencies.
6. All drawings and prints are made at the subcontractor's expense.

**307 Protection**

Protect all work of this Trade Section from damage until Practical Completion is achieved.

**308 Cleaning**

On completion, remove all debris and clean all visible work to the project manager's satisfaction.

**309 Completion**

Complete all contracted work in accordance with contract documents and written variation orders issued by the project manager.

**END OF SECTION**

## PART I GENERAL

101 **Scope**
The work of this trade section includes but is not limited to, supplying and fixing of a complete range of plumbing fixtures and fittings as indicated on the attached schedule. Include in this work the connection of the fittings to floors, walls, other fittings, waste outlets, water supply pipes and vent pipes.

**102 Related Work**
Co-ordinate and co-operate with the following trades:

| | |
|---|---|
| Wall construction | Floor construction |
| Water Distribution | Piped Energy Distribution |
| Sanitary Sewerage | Ceramic Tile |
| Finishing Trades | |

**103 Quality Assurance**
Perform the work of this trade section using tradesmen whose experience and skills meet the requirements of controlling statutory authorities.

**104 References**
Comply with applicable portions of the following Australian Standards:

| | |
|---|---|
| AS/NZS 1229 2002 | Laundry troughs and tubs. |
| AS/NZS 1730 1996 | Washbasins. |
| AS/NZS 2023 1995 | Baths for ablutionary purposes. |
| AS 3494 1997 | Bidettes and Bidets. |
| AS 3588 1996 | Shower bases and shower modules. |
| AS 3861 1991 | Spa baths. |
| AS/NZS 3982 1996 | Urinals. |

Comply with requirements of statutory authorities having jurisdiction.

**105 Submissions**
Before ordering scheduled material, submit required product data to the project manager, particularly where the specified material is not available and alternatives are offered.

**106 Warranty**
Provide the proprietor with warranties covering:
A. Materials: in the form supplied by manufacturers of specified components.
B. Installation, for years from the date of Practical Completion: the specified components.

**107 Fees**
Pay fees to the relevant statutory authorities.

## PART II MATERIALS

**201 Acceptable Manufacturers**
Refer Schedule of Plumbing Fixtures.
Ensure that items to be installed are approved for installation by local authorities before ordering.

**202 Materials**

**203 Equipment**
Provide necessary equipment to affect a complete installation of each part of this Trade Section, including seals, jointing materials, flanges, etc.

**204 Fabrication**
Install components in a manner approved by the local authority and the project manager. Comply with requirements of relevant Australian Standards where applicable.

## PART III EXECUTION

**301 Examination**
Visit the site before delivery of materials, and compare conditions with those shown on drawings.
Ensure tasks and activities comply with the Act, Regulation, Code of Practice or Australian Standards, as relevant.
Start of work means total acceptance of conditions.

**302 Connections to Supply**

Connect supply and waste pipes to the fittings scheduled in accordance with the written instructions of the manufacturers of the items and the requirements of the responsible authority.

**303 Installation**

Install components to the project manager's and the authority's approval, to applicable Australian Standards and to the manufacturer's instructions.
Co-ordinate with other trades.

**304 Testing**

Cover no pipes, joints or connections until tested and passed by the relevant authority, and approved by the project manager.
Submit to the project manager copies of certificates issued by relevant authorities.

**305 Protection**

Protect work of this trade section from damage until Practical Completion is achieved.

**306 Cleaning**

On completion, remove debris and clean visible work to the project manager's satisfaction.

**307 Completion**

Complete contracted work in accordance with contract documents and written variation orders issued by the project manager.

**NOTE: PLUMBING FIXTURES SCHEDULE AT END OF DOCUMENT .**

**END OF SECTION**

## PART I GENERAL

**101 Scope**

The work of this trade section includes but is not limited to, supplying and fixing of water storage tanks and plumbing fixtures and fittings as indicated on the attached schedule. Include in this work the connection of the fittings to floors, walls, other fittings, bases, downpipes, waste outlets, water supply pipes and related materials.

**102 Related Work**

Co-ordinate and co-operate with the following trades:

| | |
|---|---|
| Wall construction | Floor construction |
| Water Distribution | Concrete |
| Finishing Trades | Roofing and Roof Plumbing |

**103 Quality Assurance**

Perform the work of this section using tradesmen whose experience and skills meet the requirements of controlling statutory authorities.

**104 References**

Comply with applicable portions of the following Australian Standards:

| | |
|---|---|
| AS/NZS 1229 2002 | Laundry troughs and tubs. |
| AS/NZS 1730 1996 | Washbasins. |
| AS/NZS 2023 1995 | Baths for ablutionary purposes. |
| AS 3494 1997 | Bidettes and bidets. |
| AS 3588 1996 | Shower bases and shower modules. |
| AS 3861 1991 | Spa baths. |
| AS/NZS 3982 1996 | Urinals. |
| HB 230 2008 | Rainwater Tank Design and Installation Handbook. |

Comply with requirements of statutory authorities having jurisdiction.

**105 Submissions**

Before ordering scheduled material, submit required product data to the project manager, particularly where the specified material is not available and alternatives are offered.

**106 Warranty**

Provide the proprietor with warranties covering:

A. Materials: in the form supplied by manufacturers of specified components.

B. Installation, for years from the date of Practical Completion of the specified components.

**107 Fees**

Pay fees to the relevant statutory authorities.

## PART II MATERIALS

**201 Acceptable Manufacturers**

Refer to Schedule in the next clause.

Ensure that items to be installed are approved for installation by local authorities before ordering.

**202 Materials**

| Item | Description | Manufacturer |
|---|---|---|
| Tank stands | | |
| Tanks | | |
| Filters | | |
| Pipes | | |
| Connections | | |
| | | |

**203 Equipment**

Provide necessary equipment to effect a complete installation of each part of this section, including seals, jointing materials, flanges, etc.

**204 Fabrication**

Install components in a manner approved by the local authority and the project manager. Comply with requirements of relevant Australian Standards where applicable.

## PART III EXECUTION

**301 Examination**

Visit the site before delivery of materials, and compare conditions with those shown on drawings.
Ensure tasks and activities comply with the Act, Regulation, Code of Practice or Australian Standards, as relevant.
Start of work means total acceptance of conditions.

**302 Connections To Supply**

Connect supply and waste pipes to the fittings scheduled in accordance with the written instructions of the manufacturers of the items and the requirements of the responsible authority.

**303 Installation**

Install components to the project manager's and the authority's approval, to applicable Australian Standards and to the manufacturer's instructions.
Co-ordinate with other trades.

**304 Testing**

Cover no pipes, joints or connections until tested and passed by the relevant authority, and approved by the project manager.
Submit to the project manager copies of certificates issued by relevant authorities.

**305 Protection**

Protect work of this section from damage until Practical Completion is achieved.

**306 Cleaning**

On completion, remove debris and clean visible work to the project manager's satisfaction.

**307 Completion**

Complete contracted work in accordance with contract documents and written variation orders issued by the project manager.

**END OF SECTION**

## PART I GENERAL

### 101 Scope

Supply, install and commission complete packaged system air conditioning consisting of, but not limited to the following items:
Packaged air conditioning units complete with integral air-cooled condensers, coils, hermetic compressor unit(s), refrigeration piping and fittings, evaporator-air side fan, condenser-air side fan, all housed in a single cabinet.
Exhaust system.
With reverse cycle capacity.
As split type consisting of separate outdoor condensing units and indoor fan coil units.
Roof penetrations, underflashings, overflashings and trimming members.
Other

### 102 Related Work

Co-ordinate and co-operate with the following trades:

| | |
|---|---|
| Metal decking and roof plumbing | Metalwork |
| Air distribution ductwork | Electrical installation |

### 103 Quality Assurance

A. Provide written evidence to the project manager and/or engineer of required experience and skills of personnel proposed for this project.
B. Ensure electrical and plumbing work is performed only by electricians and plumbers with qualifications. Submit evidence of these qualifications.

### 104 References

Comply with applicable portions of the following Australian Standards:

| | | |
|---|---|---|
| AS 1324 | Air filters for use in general ventilation and air-conditioning. *There are 2 parts, 2001 and 2003.* | |
| AS 2913 2000 | Evaporative air-conditioning equipment. | |
| AS/NZS 3666 | Air-handling and water systems of buildings - Microbial control. | |
| | 3666.1 2011 | Design, installation and commissioning. |
| | 3666.2 2011 | Operation and maintenance. |
| | 3666.3 2011 | Performance-based maintenance of cooling water systems. |
| | 3666.4 2011 | Performance-based maintenance of air-handling systems (ducts and components) |

Comply also with the requirements of environmental and statutory authorities having jurisdictions.

### 105 Submissions

Submit data on packaged units and manufacturers of other components.
Provide drawings of preferred locations and sizing details of roof top platforms required to support units and service personnel where they are to be provided by others.
Submit to project manager operation and maintenance instructions for units and other items.

### 106 Delivery, Handling and Storage

Arrange with builder dates of delivery and installation of units and associated components, cranage or handling to installed position and maintenance arrangements.
Where possible, install materials directly in place. Store other materials in a secure location on site as directed by builder.

### 107 Warranty

Provide a warranty to the proprietor via the project manager that units which fail within the warranty period of years from the date of Practical Completion will be repaired or replaced contracted, where maintenance is not performed by this contractor.

### 108 Maintenance

Provide an agreement form to be submitted to proprietor offering regular maintenance of the entire installation for the agreed upon period.
Detail the precise activities of maintenance offered.

## PART II MATERIALS

### 201 Manufacturers

The following manufacturers and installers are acceptable:

### 202 Equipment

Item:

Equipment No.
Zone:
Make:
Model:
Type:
Capacities
Supply air quantity: L/s
Fresh air quantity: L/s
Cooling duty
Total cooling: kW
Air on temperature DB: C
Air on temperature WB: C
Heating duty kW
Air on temperature: C

**203 Coils**

Provide coils constructed of copper tubes with aluminium fins
Ensure maximum face velocity does not exceed 2.75 m/sec over the coils. Provide coils complete with distributor, correctly sized for duty.
Heating coil:

**204 Compressor and Pipe Work**

Provide units equipped with hermetically sealed compressor motor, complete with expansion valve or capillary tube type expansion device, liquid line filter/drier and refrigeration pipe work.
On reverse cycle units, ensure the refrigeration circuit includes reversing valve, accumulator and check valve, plus additional refrigeration pipe work to bypass drier on reverse cycle operation.
For split units provide refrigeration pipe work sized and installed to equipment manufacturer's recommendations.

**205 Fans**

Provide supply air fans of forward-curved centrifugal type, balanced to prevent vibration.

**206 Motors and Drive Units**

For small units evaporator and condenser fans are permitted to be direct coupled to their respective motors.
Fans to larger units are to be provided with vee-belt driven continuously rated induction motors.
Supply all fan motors sized for duty, plus 20%.
Supply with bearing of permanently lubricated ball type.

**207 Controls**

Provide units with a control panel containing all controls needed to operate and protect the components of the units.
Controls required include contractors, thermal overloads on each phase of the motors, cut-off switches on the refrigeration system, control systems and lockout relays.
Ensure all protective devices automatically reset.
Provide reverse-cycle units with an automatic de-ice control included.
Use only low voltage thermostats and control wiring.

**208 Cabinets**

Provide cabinets of 1.2mm min thickness galvanised steel finished in baked enamel.
Line internal surfaces, including access doors with insulation of 25mm min thickness.

**209 Filters**

Fit filters, either within the unit itself, or in the return air ductwork, accessible and removable without the aid of tools.
Seal between filters and casing to prevent air bypass.
Supply filters of the dry washable type with an efficiency of 70%.

**210 Brackets Sleeves etc.**

Hot dip-galvanised steel, as required for secure installation.

## PART III EXECUTION

**301 Examination**

Inspect drawings and visit site. Check aspects of required work such as plant platforms, refer any discrepancy to builder and/or project manager for decision and correction.
Ensure tasks and activities comply with the Act, Regulation, Code of Practice or Australian Standards, as relevant.
Start of work on site means total acceptance of conditions.

**302 Mounting**

Mount roof-top units on suitable vibration eliminators to prevent the transmission of noise or vibration to the building.
Co-operate with roof installer to ensure watertight installation.

**303 Condensate Drains**

Drain roof-top units to the nearest downpipe or gutter via a trapped 32mm dia PVC pipe.
For split units, drain to nearest tundish or as directed by project manager.

**304 Connection**

Provide electrical connection to temporary power supply until permanent power is available.
Connect direct to main switchboard to space allocated for mechanical services and for future equipment.
Provide flexible ductwork between unit and supply air fixed ducts. Provide weatherproof coverings over connections to external units.

**305 Commissioning**

Operate the system for ten days in summer and record results with a hydrograph. Operate also in winter with similar recording of results for 5 days. Rectify any faults. Obtain engineers' and project managers' approval on completion of commissioning.

**306 Completion**

Complete the contracted work in accordance with contract documents and written variation orders issued by the project manager.

**END OF SECTION**

## PART I GENERAL

### 101 Scope

Design, fabricate, supply, install and test a complete air distribution and associated exhaust system ductwork consisting of but not limited to:
Ductwork and fittings
Insulation to ductwork
Exhaust and intake grilles
Supply only of door grilles
Painting of all exposed ductwork
Testing
Warranty

### 102 Related Work

Co-ordinate and co-operate with trades in the following other sections:

| | |
|---|---|
| Metal decking and roof plumbing | Metalwork |
| Packaged roof top air conditioning units | Electrical installation |

### 103 Quality Assurance

Provide written evidence to the project manager/consulting engineer of required experience and skills of personnel proposed for this project.

### 104 References

Comply, as a minimum requirement, with the applicable parts for supply and installation of the following publication:
Refer to the SMACNA website (American Sheet Metal & Air Conditioning Contractor's Association), www.smacna.org
Comply with applicable portions of the following Australian Standards:

| | | |
|---|---|---|
| AS 1324 | Air filters for use in general ventilation and air-conditioning. *There are 2 parts, 2001 and 2003.* | |
| AS/NZS 1530 | Methods for fire tests on building materials, components and structures. | |
| | 1530.3 1999 | Simultaneous determination of ignitability, flame propagation, heat release and smoke release. |
| | *There are 6 other parts and 2 Amdt,1992 – 2007.* | |
| AS 1668 | The use of ventilation and air-conditioning in buildings. | |
| | 1668.2 2012 | Mechanical ventilation in buildings. *Amdt* 2013 |
| | 1668.4 2012 | Natural ventilation of buildings |
| | *There are 3 other parts, 3 Amdts and 1 Supplement, 1998 - 2012.* | |
| AS 1682 | Fire Dampers. | |
| | 1682.1 1990 | Specification. |
| | 1682.2 1990 | Installation. |
| AS/NZS 2107 2000 | Acoustics - Recommended design sound levels and reverberation times for building interiors. | |
| AS/NZS 3666 | Air-handling and water systems of buildings - Microbial control. | |
| | 3666.1 2011 | Design, installation and commissioning. |
| | 3666.2 2011 | Operation and maintenance. |
| | 3666.3 2011 | Performance-based maintenance of cooling water systems. |
| | 3666.4 2011 | Performance-based maintenance of air-handling systems (ducts and components) |
| AS 4254 2012 | Ductwork for air-handling systems in buildings. | |

### 105 Submissions

Submit for approval to consulting engineer and project manager details of the proposed materials listed in clauses 201-209 of PART II of this specification.

### 106 Shop Drawings

A. Refer DOCUMENT 00800, clause 27.
B. Show on drawings details that are necessary for fabrication, assembly transport and installation of ductwork and associated fittings, including: sizes, dimensions and markings, full details of connection legend for symbols and hatching, etc.
C. Draw to a scale nominated by the consulting engineers/project manager.
D. Sizes are to be in millimetres and represent clear internal dimensions of the ductwork.

### 107 Delivery, Handling and Storage

Arrange with builder dates of delivery and installation of ductwork and associated fittings, cranage or handling to installed position and handling arrangements.
Where possible, install materials directly in place. Store other materials in a secure location on site as directed by builder.

**108 Project Conditions**

Inspect drawings and visit site. Check aspects of required work and refer any discrepancy to builder and/or project manager, for decision.
Determine final locations and dimensions from site measurements prior to fabrication.

**109 Warranty**

Provide a statement that the capacity of the ductwork will be as documented, and that the completed installation complies with the requirements of documents listed in clause 104 above.

## PART II MATERIALS

**201 Rectangular Ductwork**

Galvanised steel sheet specifically manufactured for roll forming such as "Galvabond" or other, approved in writing by the engineer.

**202 Flexible Ductwork**

Patent aluminium spiral wound type.
PVC is not acceptable.
Provide fire dampers as required by engineer. Refer drawings.

**203 Insulation**

Comply with ASNZS 1530.3: Test for early fire hazard properties of materials and have the following results certified:
Ignitability Index 0
Spread of Flame Index 0
Heat Evolved Index 0
Smoke Developed Index 0
Material:
Colour:
"R" rating:

**204 Diffusers**

Aluminium louvre, powder coat/enamel finished:
Manufacture:
Type:
Model No.:
Size:
Finish: Colour:
Air deflection is required to be adjustable horizontally and vertically.

**205 Return and Exhaust Air Grilles**

Aluminium eggcrate, powdercoat/natural anodised/enamel finished:
Manufacture:
Type:
Model no.:
Size:
Finish: Colour:

**206 Fresh Air Grilles**

Powdercoat/Natural anodised aluminium louvre weather and vermin proof.
Manufacture:
Type:
Model no.:
Size:
Finish: Colour:

**207 Door Relief Grilles**

Powdercoat/Natural anodised aluminium fixed louvre minimum 55% free air area.
Manufacture:
Type:
Model no.:
Size:
Finish: Colour:

**208 Flexible Connections**

Waterproof canvas secured with galvanised steel straps and fixing.

**209 Fabrication Waterproof Canvas**

Shop fabricate in long lengths suitable for cartage and access to building, with a minimum of site joints.

## PART III EXECUTION

**301 Examination**

Inspect site conditions.
Ensure that conditions will permit installation.
Arrange with Builder for correction of unsatisfactory conditions.
Ensure tasks and activities comply with the Act, Regulation, Code of Practice or Australian Standards, as relevant.
Start of work means total acceptance of conditions.

**302 Preparation**

Builder is to provide for the mechanical services contractors, a clear opening, access opening, cutting patching.
Check associated air conditioning units and equipment are of the correct type and able to be operational.
Report any discrepancy to project manager/ consulting engineer, and request correction.

**303 Installation**

Install ductwork complete with transitions, bends, tees, supports, dampers, off-sets, flexible connections, take-offs and similar fittings necessary for the balancing and full operation of the system.
Form bends in flexible ductwork to manufacturer's recommendations. Bends to remain at full cross section.
Ensure galvanising remains unbroken after fabrication and installation.
Adequately stiffen to prevent 'drumming'.
Adequately support ductwork with cushioned hanging straps, located to prevent sagging.

**304 Duct Supports**

Hanging and supporting systems to SMACNA standards and of the trapeze type of hanging system. Install hot dip galvanised steel supports.
Fix supports for ductwork to the building structure at recommended spacings and at each change of direction.

**305 Insulation**

Install insulation as scheduled, indicated or required, over entire surface of ductwork fixed with adhesive, adhesive tape or bands avoiding any damage to insulation blanket or foil.

**306 Flexible Connections**

Use to prevent transmission of vibration from moving equipment to adjacent ducting. Also use between main ducts and unit casings and to prevent excessive movement of long ducts and where ducts cross building expansion joints.

**307 Balancing Dampers**

Fit to branches and where a branch serves more than one outlet.
Control air volumes by means of dampers in branches, opposed blade dampers in necks, behind grilles, or stream splitter dampers as appropriate. Ensure that factory manufactured opposed blade dampers are fitted at the air outlet to balance and straighten the air flow across the face of the grille. Do not use plastic cogs.

**308 Air Outlets**

Install supply and return air outlets as indicated on the drawings or arrange with builder to have other trades install.
Ensure diffusers have provision for air pattern adjustment, both horizontally and vertically.

**309 Testing**

Balance air quantities at air grilles to within ± 10% of specified quantity.
Measure air quantities in air ducts. Include an N.E.B.B. or N.A.T.A. certification for air and water balancing.
Perform final balancing under the supervision of the engineer, and complete to his satisfaction.

**310 Completion**

Complete the contracted work in accordance with contract documents and written variation orders issued by the project manager.

**END OF SECTION**

## PART I GENERAL

### 101 Scope

The work of the Trade section includes but is not limited to the design, supply and installation of electrical transmission and reticulation materials from the mains supply to parts of the building, site, and connection for:
Power reticulation
Lighting reticulation
Mechanical equipment
Control systems

### 102 Related Work

Co-ordinate and co-operate with the following trades:

| | |
|---|---|
| Floor Construction | Low voltage lighting |
| Wall Construction | Joinery |
| Ceiling Construction | Carpentry |

### 103 Quality Assurance

A. Licensed electrical technicians only may perform work, experienced in the requirements of the project. Licences are those issued by the state authority having direct control or interest in the work.
B. Perform the entire installation in accordance with the requirements of the statutory authority having jurisdiction.

### 104 References

Comply with applicable portions of the following Australian Standards:

| | | |
|---|---|---|
| AS/NZS 1680 | Interior lighting. *There are numerous parts 1997- 2012* | |
| AS/NZS 2053 | Conduits and fittings for electrical installations. *There are 8 parts, 1995 - 2002.* | |
| AS 2293 | Emergency escape lighting and exit signs for buildings. | |
| | 2293.2 1995 | Inspection and maintenance. *Plus 3 Amdts, 1998 – 2012. There are 3 parts and 5 Amdts, 1995 – 2012.* |
| AS 2560 | Sports Lighting. | |
| | 2560.2.3 2007 | Sports Lighting – Specific applications – Lighting for football (all codes). |
| | 2560.2.5 2007 | Sports Lighting – Specific applications – Swimming pools. |
| | 2560.2.8 2007 | Sports Lighting – Specific applications – Outdoor bowling greens. *Plus 1 Amdt, 2008.* |
| | *There are 6 other parts, 1986 – 2003, plus 2 Amdts, 1994 – 2008.* | |
| AS/NZS 3000 2007 | Electrical Installation (known as the Australian/New Zealand Wiring Rules).*There are 2 Amdts, 2009 & 2012. This Standard is in constant revision and comes in 4 different forms.* | |
| AS/NZS 3018 2001 | (Obsolescent) Electrical installations - Domestic installations. *Changed in 2010.* | |
| AS 3786 1993 | Smoke alarms. *There are 4 Amdts, 1995 - 2004.* | |

### 105 Submissions

On request of the project manager, submit for approval any item related to the installation, including:
data sheets on materials; wiring diagrams - plans; samples of products; licence certificates and obtain written approval of each item so requested.
Evidence of payment of fees where applicable.

### 106 Delivery, Handling and Storage

Deliver, unload and store in a secure area, in accordance with manufacturer's instructions where applicable, to prevent damage, deterioration and loss.

### 107 Warranty

Provide a warranty covering aspects of required work of this Trade section, for a period of not less than years from the date of Practical Completion.

### 108 Fees and Notices

Pay fees, and submit notices to supply authority.
Arrange for inspections by authority inspector and obtain final certificate.

## PART II MATERIALS

### 201 General

Supply only products which bear the required indication of approval of the statutory authority having jurisdiction.
At project manager's request supply list of proposed materials, showing name of manufacturer where not named below.

**202 Materials**

A. Mains connection to building:
By supply authority.
B. Meters:
By Supply Authority.
C. Switchboards and other controls:
D. Reticulation cable:
E. Power outlets:
F. Light fittings:
G. Conduits:
H. Cable tray:
I. Cable ducts:
J. Identification materials:
K. Power factor correction:
L. Lamps:
M. Floodlighting:
N. Site lighting:
O. Earthing:
P. Alarm and detection systems:
Q. Clock systems:
R. Telephone system:
S. Inter-communication system:
T. Television system:
U. Heating cables and units:
V. Fans, exhaust and heating:
W. Temporary supply:
X. Smoke alarms (to be inter-connected)

**203 Fabrication**

Components manufactured off-site are to be compatible with the requirements of the project and to project manager's approval.
Refer to project manager for approval of finishes of components where item will be exposed to view after installation.

**204 Source Quality Control**

Where supply authority or project manager requires, submit data relating to manufactured components in the form of:
A. Test reports.
B. Certificates issued following inspection of products.
C. Verification of performance statement.

## PART III EXECUTION

**301 Examination**

Request rectification of existing work or preparation of additional or new work by builder where necessary to facilitate electrical installations.
Obtain essential services information (dial before you dig).
Ensure tasks and activities comply with the Act, Regulation, Code of Practice or Australian Standards, as relevant.
Start of work means total acceptance of conditions.

**302 Preparation**

Provide necessary safety or security controls where required to ensure safe practices and installations.
A. Slab penetrations for floor-mounted general purpose outlets (GPOs), telephone outlets etc.
B. Chasing and making good for conduit access for skirting
C. Chasing and wiring duct, GPO’s switches etc.
D. Supply and installation for access opening where required.
E. Provision of electrical riser.
F. Provision of signwriting to main switchroom and distribution board.
G. Forming, trimming, patching and making good of openings for luminaries to sizes required by the Electrician.
H. Provision of concrete
I. Making good existing roadway etc.

**303 Installation**

Comply with regulatory requirements relating to installation methods and systems.
Ensure that installations are within the regulatory maximum loads and tolerances.
A. Chases
Form chases, in co-operation with builder, where necessary in structural items within limits set by project manager and builder.

B. Cable
Secure cable, using materials specified above, at centres recommended by regulations and/or manufacturer.

C. Conceal wiring and cable equipment. Conduit cable where necessary or required in approved material.

**304 Field Quality Control**

A. Where requested by supply authority supply test data obtainable from component manufacturer.

B. Arrange for inspections by component manufacturer's representative to ensure correct application, use and installation.

**305 Adjust and Clean**

Adjust installations of components to ensure proper fit and alignment.
Remedy items of inefficient operation or of doubtful performance.
Clean visible items to original condition.
Remove debris from installation in concealed spaces.

**306 Protection**

Protect installed items from damage from any source until Practical Completion.

**307 Schedules**

Refer to attached schedule of installed fittings and items of equipment.
Refer electrical drawings.

**308 Completion**

Complete contracted work in accordance with contract documents and written variation orders issued by the project manager.

**END OF SECTION**

## PART I GENERAL

### 101 Scope

The work of this trade section includes but is not limited to supply and installation of low voltage lighting and:
Reticulation
Transformers
Quartz or Tungsten Halogen lamps with dichroic reflectors
Mounting devices
Baffles

### 102 Related Work

Co-ordinate and co-operate with the following other trades:
Electrical installation
Ceiling construction and finishes
Wall construction and finishes

### 103 Quality Assurance

A. Licensed electrical technicians only may perform work, experienced in the requirements of the project. Licences are those issued by the state authority having direct control or interest in the work.
B. Perform the entire installation in accordance with the requirements of the statutory authority having jurisdiction.

### 104 References

Comply with applicable portions of the following Australian Standards:

| | |
|---|---|
| AS/NZS 1680 | Interior lighting. *There are numerous parts and 1 Amdt, 1997- 2012.* |
| AS/NZS 3000 2007 | Electrical Installation (known as the Australian/New Zealand Wiring Rules). *There is 2 Amdts, 2012. This Standard is in constant revision.* |

### 105 Submissions

On request of the project manager, submit for approval any item related to the installation, including: data sheets on materials; wiring diagrams - plans; samples of products; licence certificates and obtain written approval of each item so requested.
Provide evidence of payment of relevant fees, where applicable,

### 106 Delivery, Handling and Storage

Deliver, unload and store in a secure area, in accordance with manufacturer's instructions where applicable, to prevent damage, deterioration and loss.

### 107 Warranty

Provide a warranty covering all aspects of required work of this trade section, for a period of not less than years from the date of Practical Completion.

### 108 Fees and Notices

Pay fees and submit notices to supply authority.
Arrange for inspections by authority Inspector and obtain final certificate.

## PART II MATERIALS

### 201 Approved Manufacturers

Lamps with integral reflectors:

### 202 Materials

A. Lamps:
   1. 12 volt system AC +3% -6%.
   2. Low voltage tungsten or quartz halogen. Refer schedule for VA and watt ratings for each lamp. Provide lamps integral with dichroic reflector permanently cemented as a unit, factory pre-focused within tolerances stated in the Supplier's data sheets. Comply with AS 3137 Category A.
B. Transformers:
   1. Fully enclosed designed to be concealed from view, with performance compatible with lamp. Provide transformers on a ratio of 1 transformer to 1 lamp.
   2. Provide mounting for securing each transformer in place.
   3. Transformer properties: 5% regulation or better short circuit protected, fitted with fuse on the secondary output.
C. Cable:
   Provide cable sizes in accordance with the following table:

| LAMP | LAMP | NOMINAL | CABLE SIZE | | |
|---|---|---|---|---|---|
| **WATTS** | **VOLTS** | **1mm** | **1.5mm** | **2.5mm** | **4mm** |
| 6V | | 3.5m | 5m | 8.5m | 13.5m |
| 20W | 12V | 7m | 10m | 17m | 27m |
| 24V | | 13.5m | 20m | 34m | 84m |
| | | | | | |
| 6V | | 1.5m | 2m | 3.5m | 5.5m |
| 50W | 12V | 2.5m | 4m | 7m | 11m |
| 24V | | 5m | 8m | 14m | 22m |
| | | | | | |
| 6V | | - | - | 2m | 3.5m |
| 75W | 12V | - | 3m | 4m | 7m |
| **24V** | | **4m** | **6m** | **8m** | **14m** |

**203 Material Particulars**

Where light dimmers are used, of the thyristor type, provide a tuned inductance between the dimmer and the primary of the isolating transformer.

## PART III EXECUTION

**301 Examination**

Examine the conditions, comparing drawings with site conditions. Request rectification of situation which is unsuitable via the project manager. Start of work means total acceptance of conditions.
Ensure tasks and activities comply with the Act, Regulation, Code of Practice or Australian Standards, as relevant.

**302 Preparation**

Provide necessary safety or security control where required to ensure safe practices and installations.
Remove material or insulation from within 150mm above or beside lamp reflectors. Ensure adequate ventilation.

**303 Installation**

Comply with regulatory requirements relating to installation methods and systems.
Ensure that installations are within the regulatory maximum loads and tolerances.

A. Chases:
   Form chases, in co-operation with builder, where necessary in structural items within limits set by project manager and builder.
B. Cable:
   Secure cable, using materials specified above, at centres recommended by regulations and/or manufacturer.
C. Conceal wiring and cable equipment. Conduit cable where necessary or required in approved material.

**304 Installation Particulars**

Connect transformers to the 240 volt supply via a 3-core flexible cable with plug top connected to the switched socket.
Mount transformers in well ventilated location, always accessible for inspection and maintenance.
Install components of the system in accordance with manufacturer's instructions.
Terminate lighting power circuits at each fitting with wiring plate.

**305 Field Quality Control**

A. Where requested by supply authority supply test data obtainable from component manufacturer.
B. Arrange for inspections by component manufacturer's representative to ensure correct application, use and installation.

**306 Adjust and Clean**

Adjust installations of components to ensure proper fit and alignment.
Remedy items of inefficient operation or of doubtful performance.
Clean visible items to original condition.
Remove debris from installation in concealed spaces.

**307 Protection**

Protect installed items from damage from installation until Practical Completion.

**308 Completion**

Complete contracted work in accordance with contract documents and written variation orders issued by the project manager.

**END OF SECTION**

## PART I GENERAL

### 101 Scope

The work of this trade section includes but is not limited to supply and installation of cabling, including ISDN, systems for home and office units in single or multiple unit buildings. The cabling provides for telephone and high speed data communication systems with a limit of four lines into each unit.
The work includes:
Connection to the carrier's main cable (by carrier)
Cabling routing design
Use of cabling
Distribution devices
Compliance with Australian Standards.

### 102 Related Work

Co-ordinate and co-operate with the following trades:

| | |
|---|---|
| Electrical installation | Floor construction |
| Wall construction | Ceiling Construction |
| Finishing trades | |

### 103 Quality Assurance

Perform work employing experienced tradespeople familiar with the quality of work required and who are AUSTEL-licensed in accordance with requirements of TS 009.
Arrange for a conference with relevant other trades to decide upon matters which affect them.

### 104 References

Comply with applicable portions of the following Australian Standards:

| | |
|---|---|
| AS/NZS 1367 2007 | Coaxial cable and optical fibre systems for the RF distribution of analog and digital television and sound signals in single and multiple dwelling installations. |
| AS/NZS 3080 2013 | Information technology – Generic cabling for customer premises. |
| HB 252 2007 | Communications Cabling Manual – Module 3: Residential communications cabling handbook. |
| AUSTEL TS 008 | Requirements for authorised cabling rules (wiring rules) (Superseded). |
| AUSTEL TS 009 | Installation requirements for customer cabling (Superseded). |
| AS/NZS ISO/ IEC 15018 2005 | Information technology – Generic cabling for homes. |
| AS/ACIF S008 2006 | Requirements for customer cabling products. |
| AS/ACIF S009 2006 | Installation requirements for customer cabling (Wiring Rules). |
| CCM Package 2007 | Communications Cabling Manual Package 2007 (Volumes 1 and 2). |

### 105 Submissions

On request of the project manager, submit for approval any item related to the installation, including:
data sheets on materials; wiring diagrams - plans; samples of products; licence certificates and obtain written approval of each item so requested.
Provide evidence of payment of relevant fees, where applicable.

### 106 Delivery, Handling and Storage

Deliver, unload and store in a secure area, in accordance with manufacturer's instructions where applicable, to prevent damage, deterioration and loss.

### 107 Warranty

Provide a warranty covering aspects of required work of this trade section, for a period of not less than years from the date of Practical Completion.

### 108 Fees and Notices

Pay fees, and submit notices to supply authority
Arrange for inspections by authority inspector and obtain final certificate.

## PART II MATERIALS

### 201 Acceptable Manufacturers

### 202 Materials

A. Building cable and cord:
Cable colour code to comply with AS/NZS 3085.
B. Disconnect test points:
C. Distribution device:

D. Telecommunications outlet
E. Network termination device:
F. Other:

**203 Carrier's Recommendations**

Before ordering materials for the project, submit to the carrier a list of the components and their descriptions. The carrier then has the opportunity to approve materials chosen.

## PART III EXECUTION

**301 Examination**

Obtain essential services information (dial before you dig).
Examine carefully the proposed route for cable installation and installation of other components. Obtain project manager's approval before executing the work.
Ensure tasks and activities comply with the Act, Regulation, Code of Practice or Australian Standards, as relevant.
Start of work means total acceptance of conditions.

**302 Preparation**

Provide necessary safety or security controls where required to ensure safe practices and installations.
Provide needed penetration, openings, chases and structures for safe secure and effective installation of cable.
If installation is required in the electrical riser, co-operate with the electrician.

**303 Installation**

Comply with AS/NZS 1367. Refer also to installation clauses for each item.

**304 Marking and Identification**

Comply with AS/NZS 1367.

**305 Administration**

Comply with AS/NZS 1367.

**306 Field Quality Control**

A. Where requested by supply authority supply test data obtainable from component manufacturer.
B. Arrange for inspections by component manufacturer's representative to ensure correct application, use and installation.

**307 Adjust and Clean**

Adjust installations of components to ensure proper fit and alignment.
Remedy items of inefficient operation or of doubtful performance.
Clean visible items to original condition.
Remove debris from installation in concealed spaces.

**308 Protection**

Protect installed items from damage from any source until Practical Completion.

**309 Completion**

Complete contracted work in accordance with contract documents and written variation orders issued by the project manager.

**END OF SECTION**

Following are the schedules for this specification.
NOTE : THERE ARE SUGGESTED ADDITIONS IN THE SUSTAINABILITY GUIDE FOR SOME OF THE SCHEDULES

## 15 SANITARY FACILITIES

### 15.1 General

The facilities described in this Clause may be used as individual modules, in mirror image configurations or in a combined form, as specified in Clause 15.6.

### 15.2 Accessible unisex sanitary facilities

#### 15.2.1 *Water taps*

Water taps shall comply with the following:

(a) Taps shall have lever handles, sensor plates, or other similar controls.

(b) Lever handles shall have not less than 50 mm clearance from an adjacent surface.

(c) Where separate taps are provided for hot and cold water, the hot water tap shall be placed to the left of the cold water tap for horizontal configurations, or above the cold water tap for vertical configurations.

(d) Where hot water is provided, the water shall be delivered through a mixing spout.

#### 15.2.2 *WC pan clearances*

WC pan clearances, including set-out, seat height and seat width shall be as shown in Figure 38.

A1

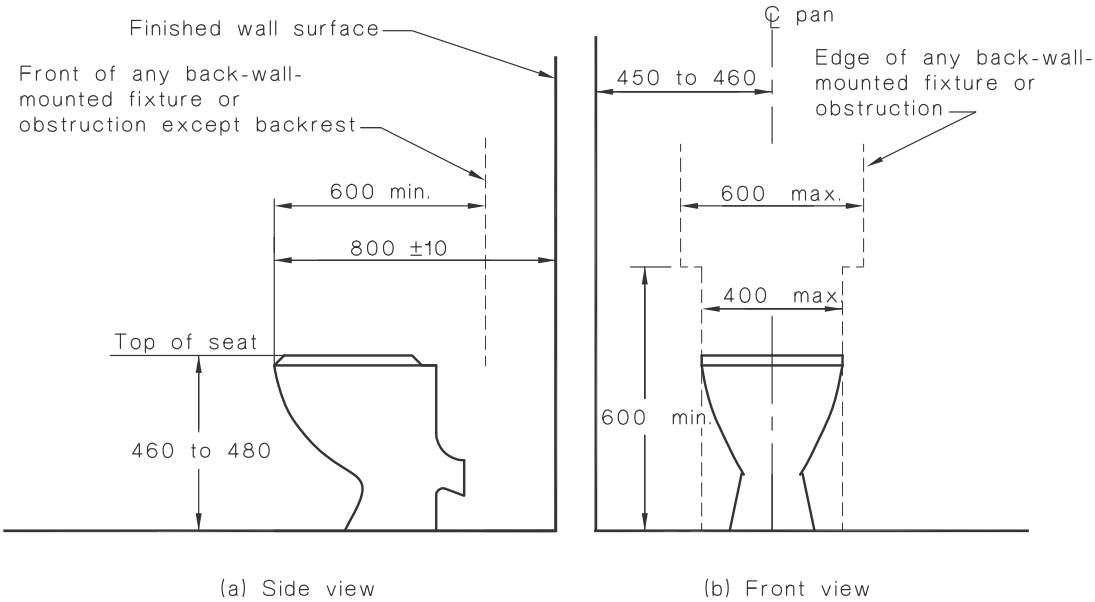


NOTES:

1 For the purpose of dimensioning, the front of the WC pan has been taken as the datum plane.

2 The dimension of 800 ±10 mm from the front of the WC pan to the wall is a critical dimension.

DIMENSIONS IN MILLIMETRES

FIGURE 38 WATER CLOSET PAN CLEARANCES, SEAT HEIGHT AND SEAT WIDTH

**15.2.3** *Seat*

A toilet seat shall be provided on accessible toilets. The toilet seat shall—

(a) be of the full-round type, (i.e., not open fronted) and with minimal contours to the top surface;

(b) be securely fixed in position when in use;

(c) have seat fixings that create lateral stability for the seat when in use;

(d) be load-rated to 150 kg; and

(e) have a minimum luminance contrast of 30% with the background (e.g., pan, wall or floor against which it is viewed).

**15.2.4** *Backrest*

A backrest shall be provided on accessible toilets. The backrest shall—

(a) be capable of withstanding a force in any direction of 1100 N;

A1 (b) have a height, at the lower edge of backrest to the top of the WC seat, of 120 mm to 150 mm, as shown in Figure 39(a);

(c) have a vertical height of 150–200 mm and a width of 350–400 mm, as shown in Figure 39(a); and

(d) the front edge of the centre of the backrest be positioned to achieve an angle of between 95° to 100° back from the seat hinge (Figure 39(b)).

A1

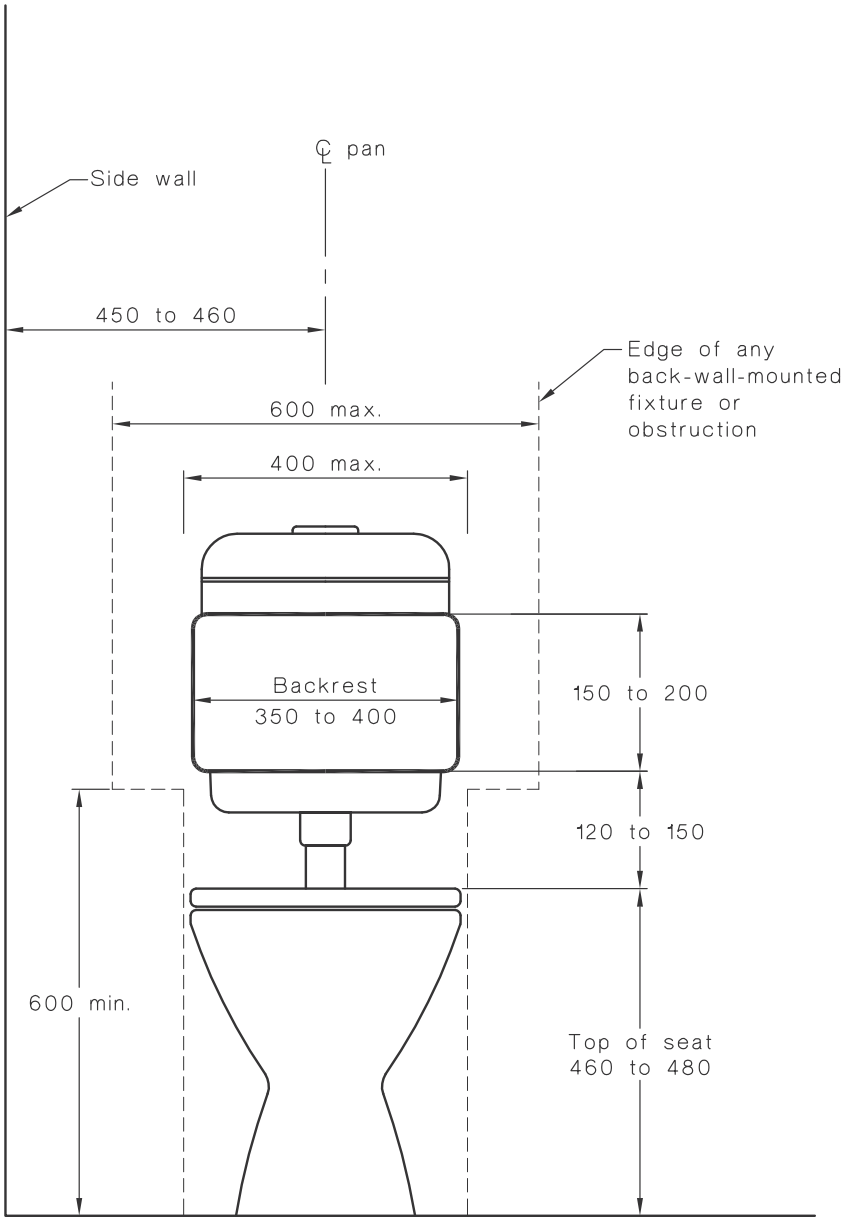


(a) Front view

DIMENSIONS IN MILLIMETRES

FIGURE 39 (in part) WATER CLOSET INSTALLATION

A1

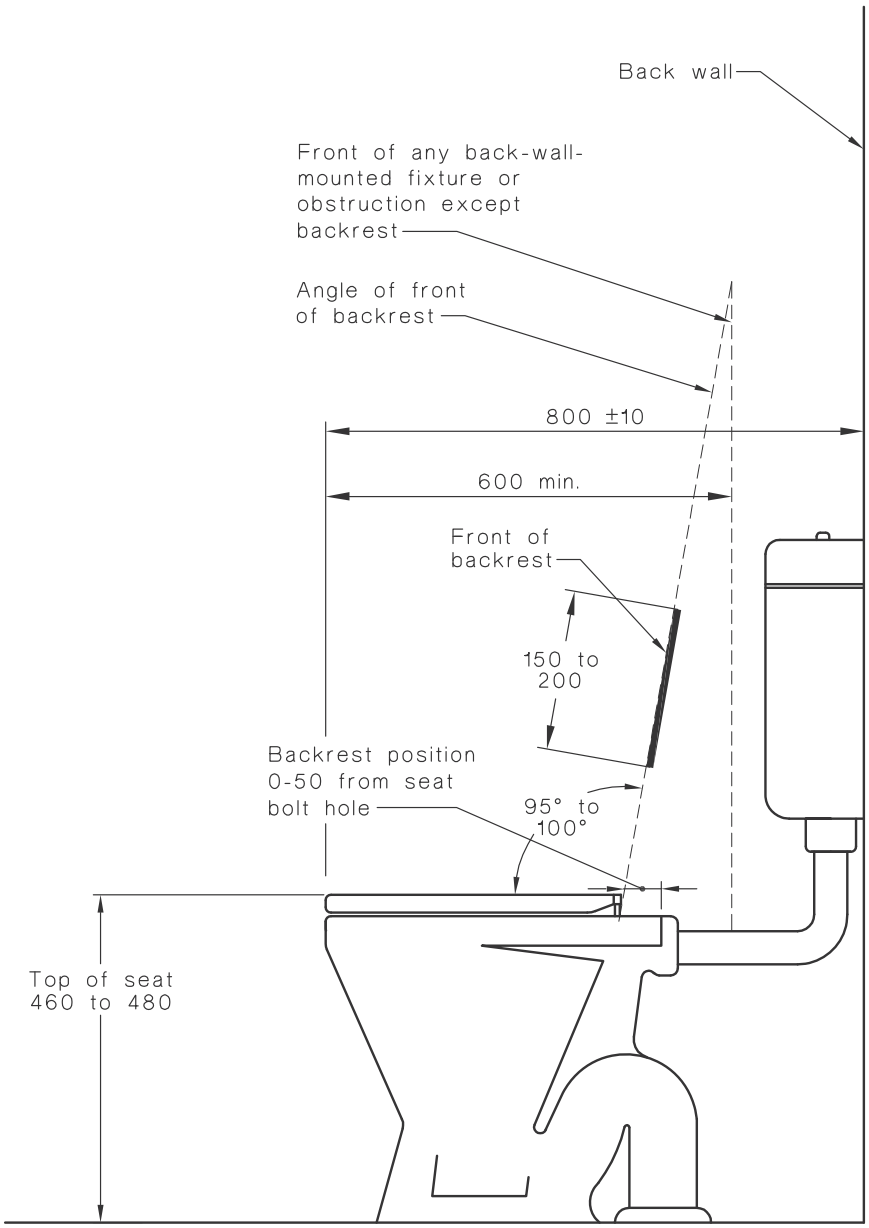


(b) Side view

DIMENSIONS IN MILLIMETRES

FIGURE 39 (in part) WATER CLOSET INSTALLATION

**15.2.5** *Flushing control*

Flushing controls shall be user activated, either hand operated or automatic. Where hand-operated flushing controls are used, they shall be located within the zone shown in Figure 40, or centred on the centre-line of the toilet, wholly within the vertical limits of that zone. The position of the flushing control within this zone shall not be within the area required for any grabrails or backrest. The flushing control shall be proud of the surface and shall activate the flush before the button becomes level with the surrounding surface.

A1

A1

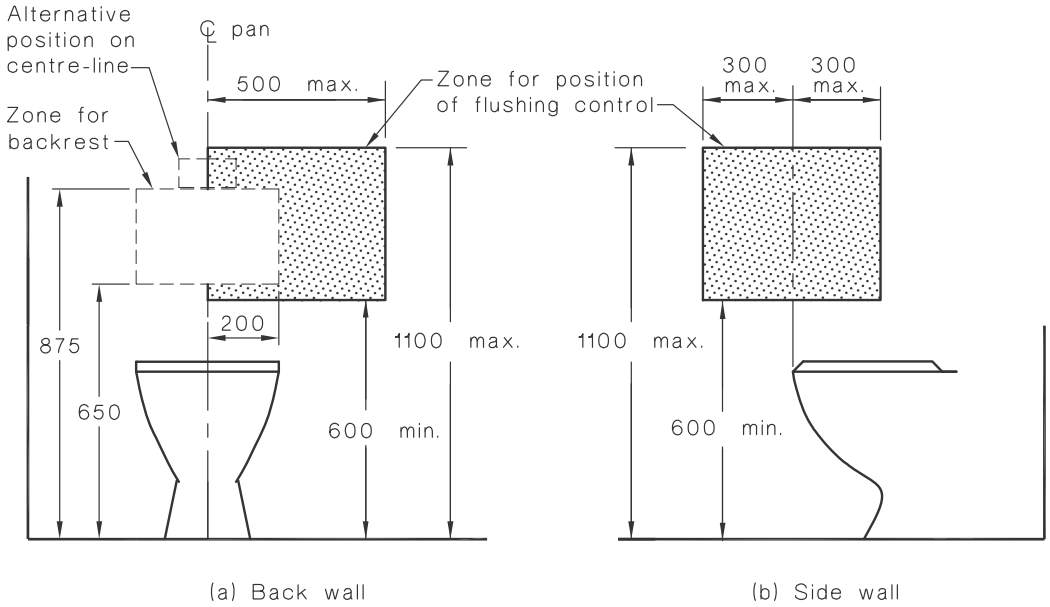


DIMENSIONS IN MILLIMETRES

FIGURE 40 ZONE FOR POSITION OF FLUSHING CONTROL

**15.2.6** *Toilet paper dispenser*

The outlet for the toilet paper dispenser shall be located within the zone specified in Figure 41.

The toilet paper dispenser shall not encroach upon the clearance space required around the grabrail specified in Clause 15.2.7.

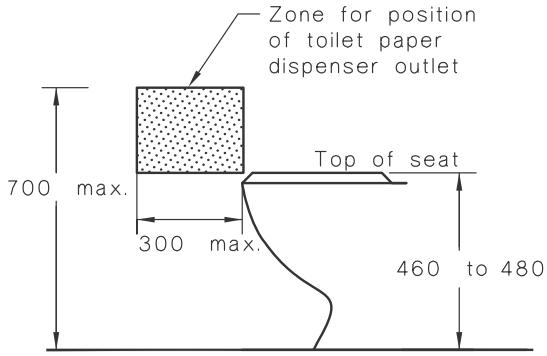


DIMENSIONS IN MILLIMETRES

FIGURE 41 ZONE FOR POSITION OF TOILET PAPER DISPENSER

**15.2.7** *Grabrails*

Where a concealed or high-level cistern or flush valve is used, a continuous grabrail, as specified in Clause 17, shall be provided across the rear wall and side wall nearest the WC pan, as shown in Figure 42. Where a low-level non-concealed cistern or flush valve is used, the grabrail shall be terminated at each side of the cistern, as shown in Figure 42.

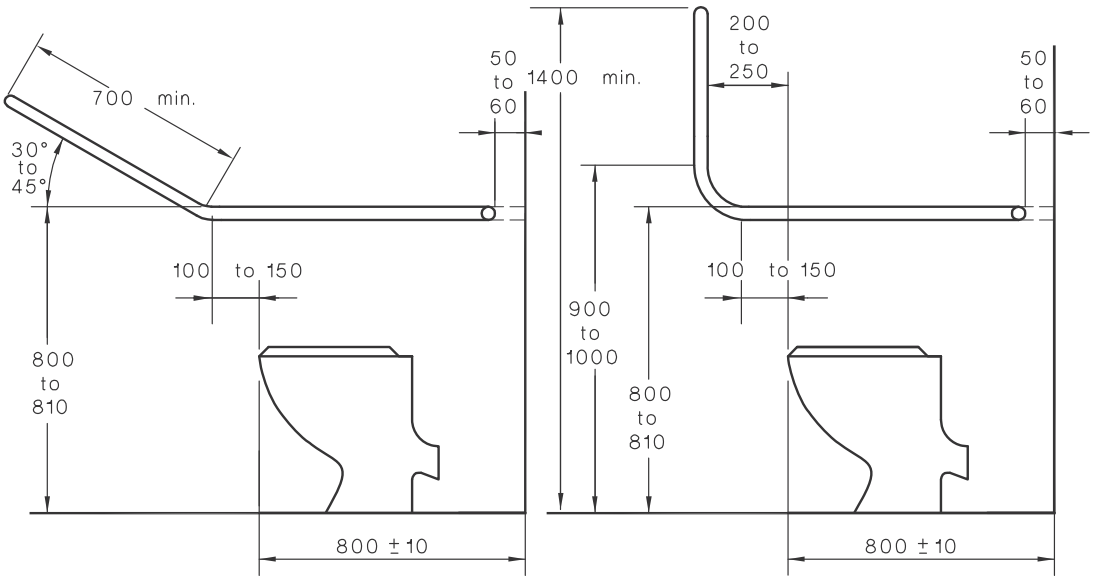


(a) Side view showing optional systems for grabrail at sides of pan

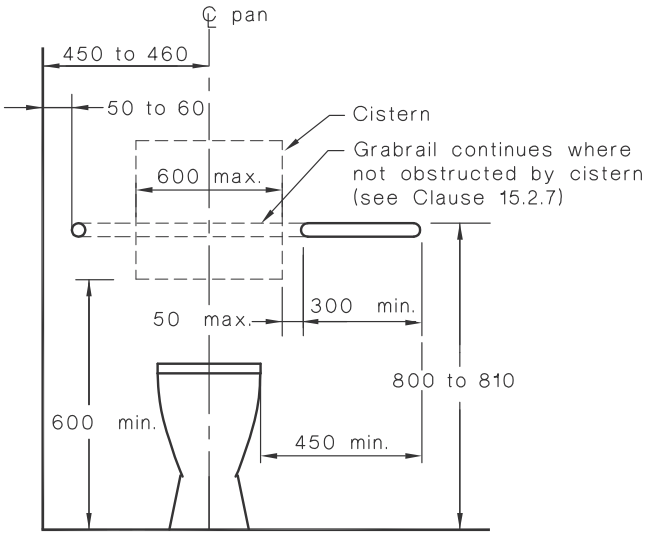


(b) Grabrail at back of pan and sectional view of grabrail at side of pan

DIMENSIONS IN MILLIMETRES

FIGURE 42 POSITIONS OF GRABRAILS IN WATER CLOSETS

**15.2.8** *Circulation space*

**15.2.8.1** *General*

For each WC, the unobstructed circulation space from the finished floor to a height of not less than 2000 mm shall be as shown in Figure 43, except for the following, which are allowed to intrude into the circulation space:

(a) The toilet paper dispenser (see Clause 15.2.6).

(b) Grabrails (see Clause 15.2.7).

(c) Washbasin limited to 100 mm intrusion as shown in Figure 43.

(d) Hand dryers and towel dispensers.

(e) Soap dispensers (see Clause 15.4.3).

(f) Shelves (see Clause 15.4.2).

(g) Wall cabinets, where provided, which shall not protrude more than 150 mm into the circulation space. The mounting of wall cabinets shall be at least 900 mm above floor level and the top shelf shall be a maximum of 1250 mm above floor level.

(h) Clothes hanging devices (see Clause 15.4.4).

(i) Portable sanitary disposal unit as shown in Figure 43.

(j) Other wall mounted fixtures, such as dispensing units and sharps disposal units, which shall have 900 mm minimum height clearance from the finished floor level and a maximum projection of 150 mm from finished wall surface.

The overlapping of circulation spaces shall be in accordance with Clause 15.6.

**15.2.8.2** *Baby change tables*

Where installed, baby change tables shall—

A1 (a) not encroach into the circulation space of any other toilet facility when in the folded up position; and

(b) have a maximum height of 820 mm and a minimum clearance underneath of 720 mm when in the open position.

A1

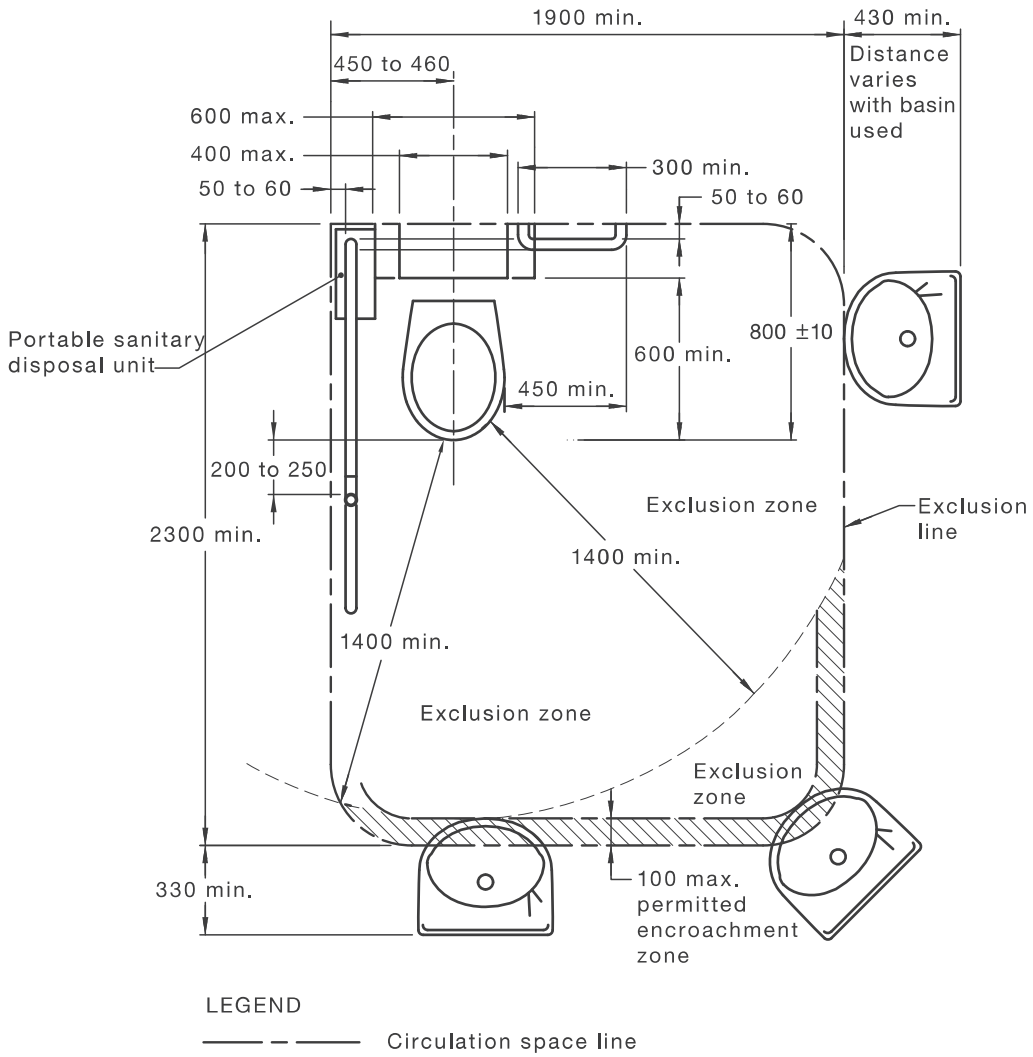


NOTE: This circulation space may overlap any other circulation spaces specified in this Standard.

DIMENSIONS IN MILLIMETRES

FIGURE 43 CIRCULATION SPACE FOR WC PAN—RIGHT-HAND TRANSFER (LEFT-HAND TRANSFER IS MIRROR REVERSED)

**15.2.9** *WC doors*

WC doors may be either hinged or sliding. WC doors shall comply with the following:

(a) Outward-opening doors shall have a mechanism that holds the door in a closed position without the use of a latch.

(b) Doors shall be provided with an in-use indicator and a bolt or catch. Where a snib catch is used, the snib handle shall have a minimum length of 45 mm from the centre of the spindle. In an emergency, the latch mechanism shall be openable from the outside.

(c) The force required to operate the door shall be in accordance with Clause 13.5.2(e).

(d) Door handles and hardware shall be in accordance with Clause 13.5.

**15.2.10** *Washbasins for unisex accessible sanitary facilities*

A hand-washing facility shall be provided inside the toilet cubicle and shall form part of the accessible unisex facility (see Clause 15.3).

## 15.3 Washbasins

**15.3.1** *General*

The installation of washbasins shall comply with the following:

(a) The washbasin shall be outside the pan circulation space as shown in Figure 43.

(b) Water taps shall comply with Clause 15.2.1.

(c) Exposed hot water supply pipes shall be insulated or located so as not to present a hazard.

(d) The projection of the washbasin from the wall and the position of taps, bowl and drain outlet shall be determined in accordance with Figures 44(A) and 44(B); except in sole-occupancy units, where Figure 45 shall apply.

(e) Water supply pipes and waste outlet pipes shall not encroach on the required clear space under the washbasin.

For each washbasin fixture, the unobstructed circulation space shall be as shown in Figure 46; except in sole occupancy units, where Figure 45 shall apply. The washbasin fixture and its fittings are the only fixtures permitted in this space.

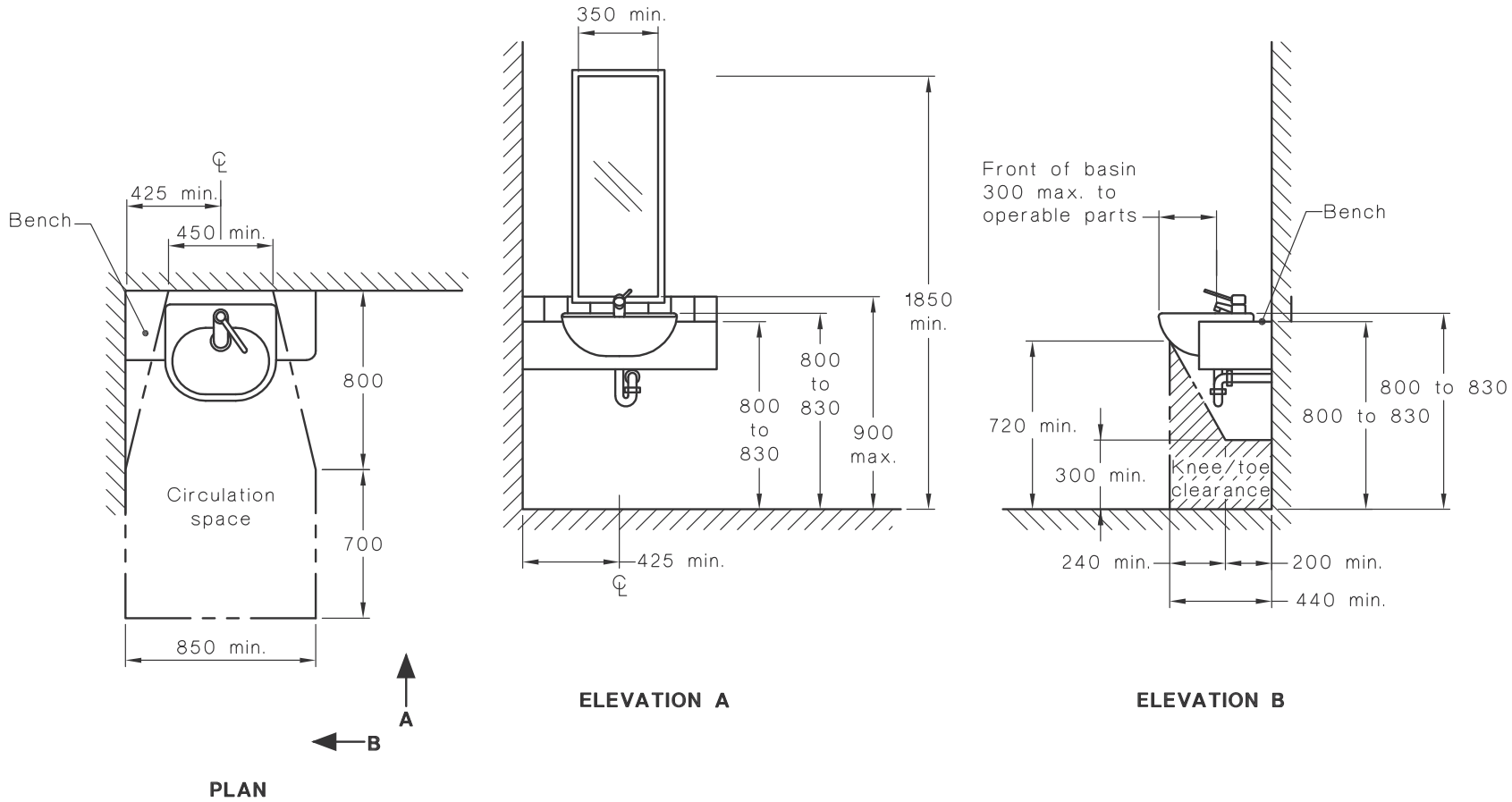


NOTE: 'Operable parts' means the centre-line of the tap, or where a level handle is provided, the end point of the level measure throughout its arc of movement, or where a sensor is provided where the sensor is reliably activated.

DIMENSIONS IN MILLIMETRES

FIGURE 44(A) SEMI-RECESSED WASHBASIN INSTALLATION —OTHER THAN FOR SOLE-0CCUPANCY UNIT

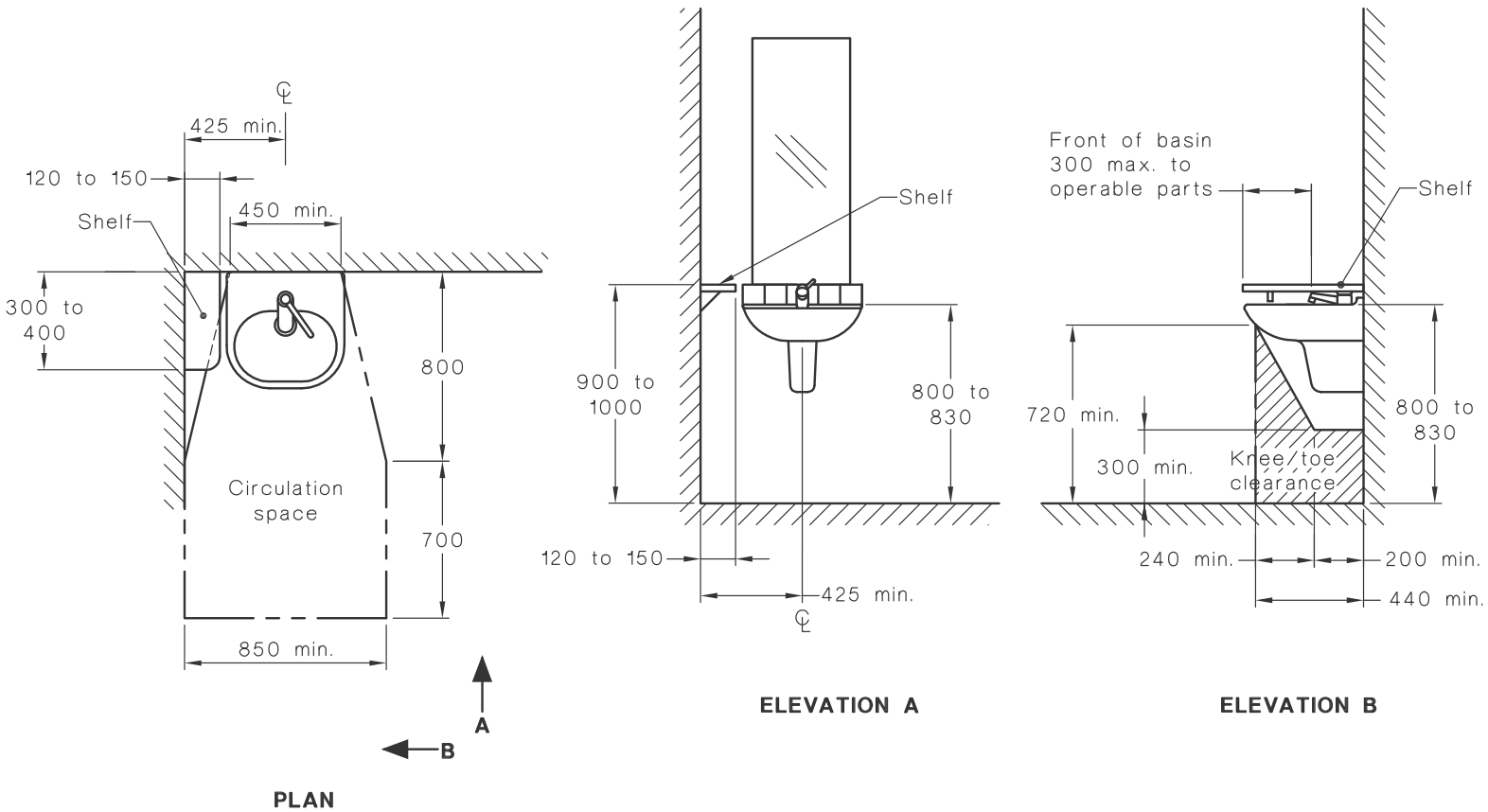


NOTE: 'Operable parts' means the centre-line of the tap or, where a level handle is provided, the end point of the level measure throughout its arc of movement, or where a sensor is provided where the sensor is reliably activated.

DIMENSIONS IN MILLIMETRES

FIGURE 44(B) WALL-MOUNTED WASHBASIN INSTALLATION—OTHER THAN FOR SOLE-0CCUPANCY UNIT

**15.3.2** *Accessible sole occupancy units*

Accessible sole occupancy units shall have the following characteristics:

(a) The projection of the washbasin from the wall and the position of taps, bowl and drain outlet shall be determined in accordance with Figure 45.

(b) Water supply pipes and waste outlet pipes shall not encroach on the required clear space under the washbasin, as shown in Figure 45.

(c) For each washbasin fixture, the unobstructed circulation space shall be in accordance with Figure 46. The washbasin fixture and its fittings are the only fixtures permitted in this space.

(d) Shelf space shall be provided adjacent to the washbasin in one of the following ways:

(i) As a vanity top—

(A) at a height of 800 mm to 830 mm above the floor;

(B) with a minimum width of 120 mm beside the basin;

(C) with a minimum depth of 300 mm from the front to the rear wall; and

(D) with no encroachment into any knee and toe clearance space for a minimum width of 850 mm centred on the basin.

(ii) As a separate fixture—

(A) within any circulation space at a height of 900 mm to 1000 mm with a minimum underside clearance of 850 mm for a width of 120 mm to 150 mm and length of 300 mm to 400 mm; and

(B) external to all circulation spaces at a height of 800 mm to 1000 mm with a minimum width of 120 mm and minimum length of 400 mm.

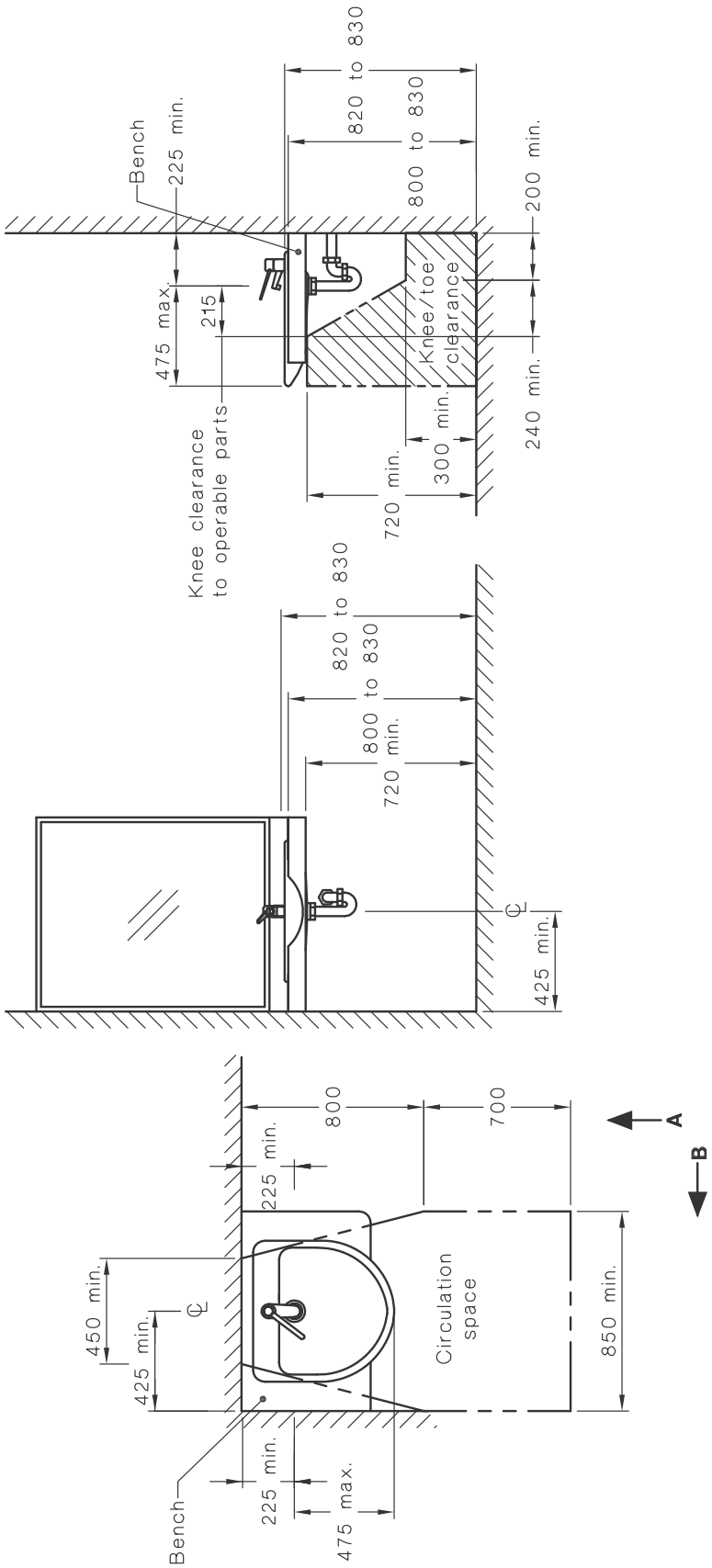


DIMENSIONS IN MILLIMETRES

FIGURE 45 WASHBASIN FOR ACCESSIBLE SOLE-OCCUPANCY UNIT

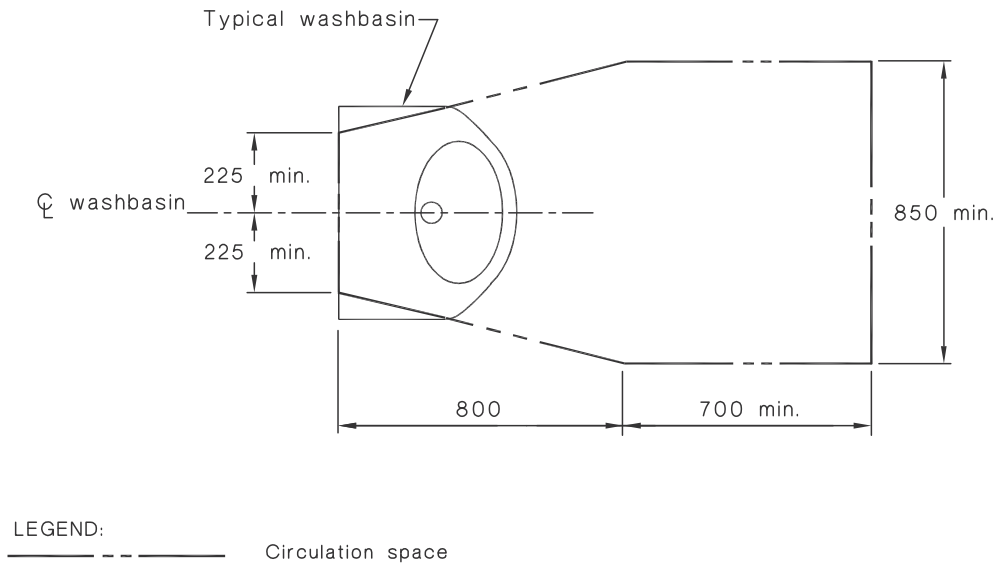


DIMENSIONS IN MILLIMETRES

FIGURE 46 CIRCULATION SPACE FOR WASHBASINS

## 15.4 Fixtures and fittings within a sanitary facility

### 15.4.1 *Mirrors*

In all sanitary facilities, the mirror shall be located either above or adjacent to the washbasin.

Where provided, a vertical mirror with a reflective surface not less than 350 mm wide shall extend from a height of not more than 900 mm to a height of not less than 1850 mm above the plane of the finished floor. Where provided, a second vertical mirror shall extend from a height of not less than 600 mm to a height of not less than 1850 mm above the plane of the finished floor.

NOTE: Angled or tilted mirrors should not be used since they do not work for all users or accessible facilities.

In an accessible sole occupancy unit, the mirror shall be centred over the washbasin.

### 15.4.2 *Shelves*

Shelf space shall be provided adjacent to the washbasin in one of the following ways:

(a) As a vanity top at a height of 800 mm to 830 mm and a minimum width of 120 mm and depth of 300 mm to 400 mm without encroaching into any circulation space.

(b) As a separate fixture—

(i) within any circulation space at a height of 900 mm to 1000 mm with a width of 120 mm to 150 mm and length of 300 mm to 400 mm; and

(ii) external to all circulation spaces at a height of 790 mm to 1000 mm with a minimum width of 120 mm and minimum length of 400 mm.

**15.4.3** *Soap dispensers, towel dispensers and similar fittings*

Where provided, soap dispensers, towel dispensers, hand dryers and similar fittings shall be operable by one hand, and shall be installed with the height of their operative component or outlet not less than 900 mm and not more than 1100 mm above the plane of the finished floor, and no closer than 500 mm from an internal corner.

**15.4.4** *Clothes-hanging devices*

A clothes-hanging device shall be installed 1200 mm to 1350 mm above the plane of the finished floor and not less than 500 mm out from any internal corner.

**15.4.5** *Sanitary disposal unit*

Where provided, the sanitary disposal unit shall be located as follows:

(a) Portable unit as shown in Figure 43.

(b) Recessed unit within 500 mm from the pan.

**15.4.6** *Switches and general purpose outlets*

Where provided near the washbasin, switches and general purpose outlets shall be located in accordance with Clause 14 and as close to the shelf or worktop as practicable.

**15.5 Showers**

**15.5.1** *General*

The general requirements for showers are as follows:

(a) Shower recesses and the circulation space for each shower recess from the finished floor to a height of not less than 900 mm shall be as shown in Figure 47. Grabrails, shower hose fittings; taps, soap holder, shelf (if provided) and the folding seat are the only fixtures permitted in these spaces.

(b) Shower recess fittings shall be provided as shown in Figures 47 and 48. Not less than two clothes-hanging devices, as specified in Clause 15.4.4, shall be fitted outside the shower recess. One such device shall be located within 400 ±10 mm and the other within 600 ±10 mm of the folding seat.

(c) If two or more shower recesses are provided, at least one shall be of the opposite hand.

**15.5.2** *Floor and waste outlet*

The requirements for the floor and waste outlet are as follows:

(a) The floor of the shower recess and associated circulation space shall be self-draining and without a step-down, raised step kerb or hob at the entry to the recess.

(b) The waste outlet for the shower shall be provided in accordance with Figure 47.

(c) The slope of the floor of the shower recess shall have a gradient between 1 in 60 and 1 in 80, as shown in Figure 49.

(d) The slope of floor of the remainder of the sanitary facility shall have a gradient between 1 in 80 and 1 in 100, as shown in Figure 49.

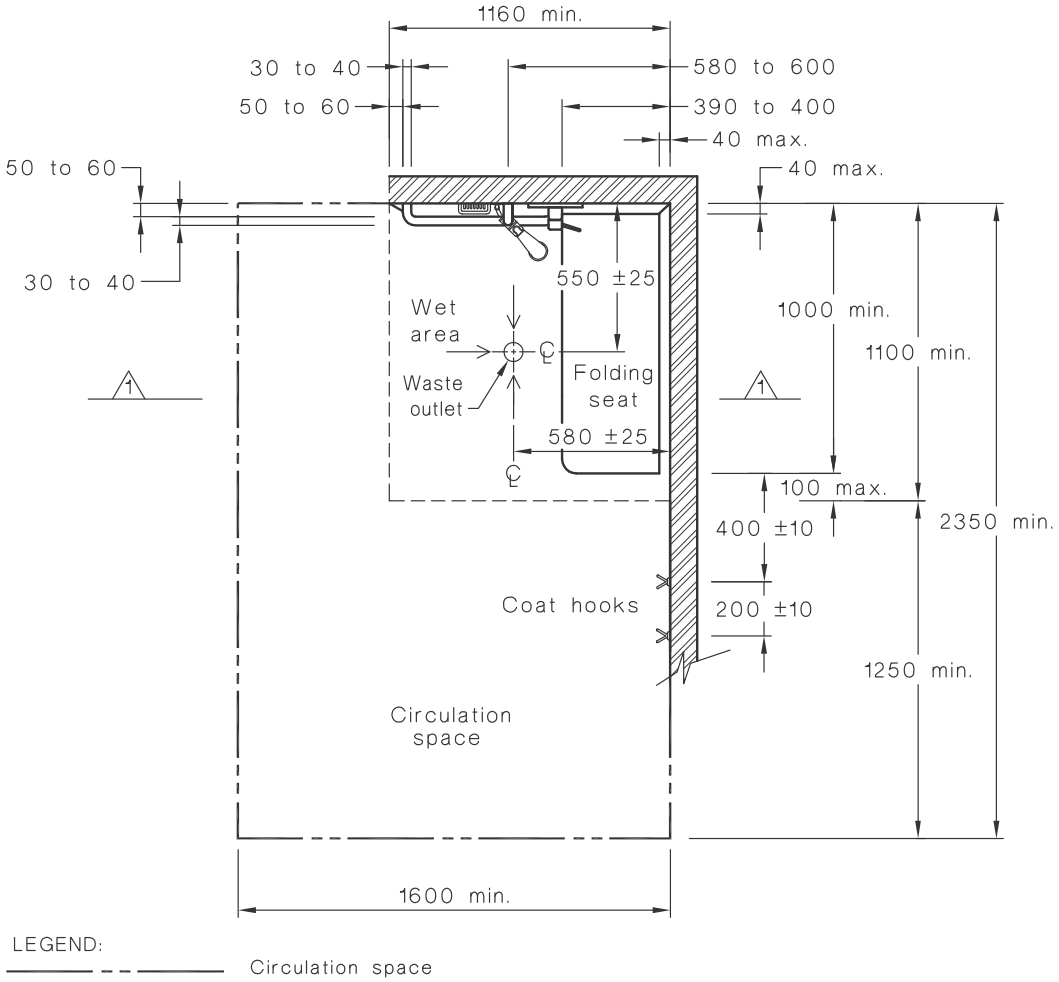


(a) Shower recess with two walls

DIMENSIONS IN MILLIMETRES

FIGURE 47 (in part) SHOWER RECESS AND CIRCULATION SPACE—PLAN

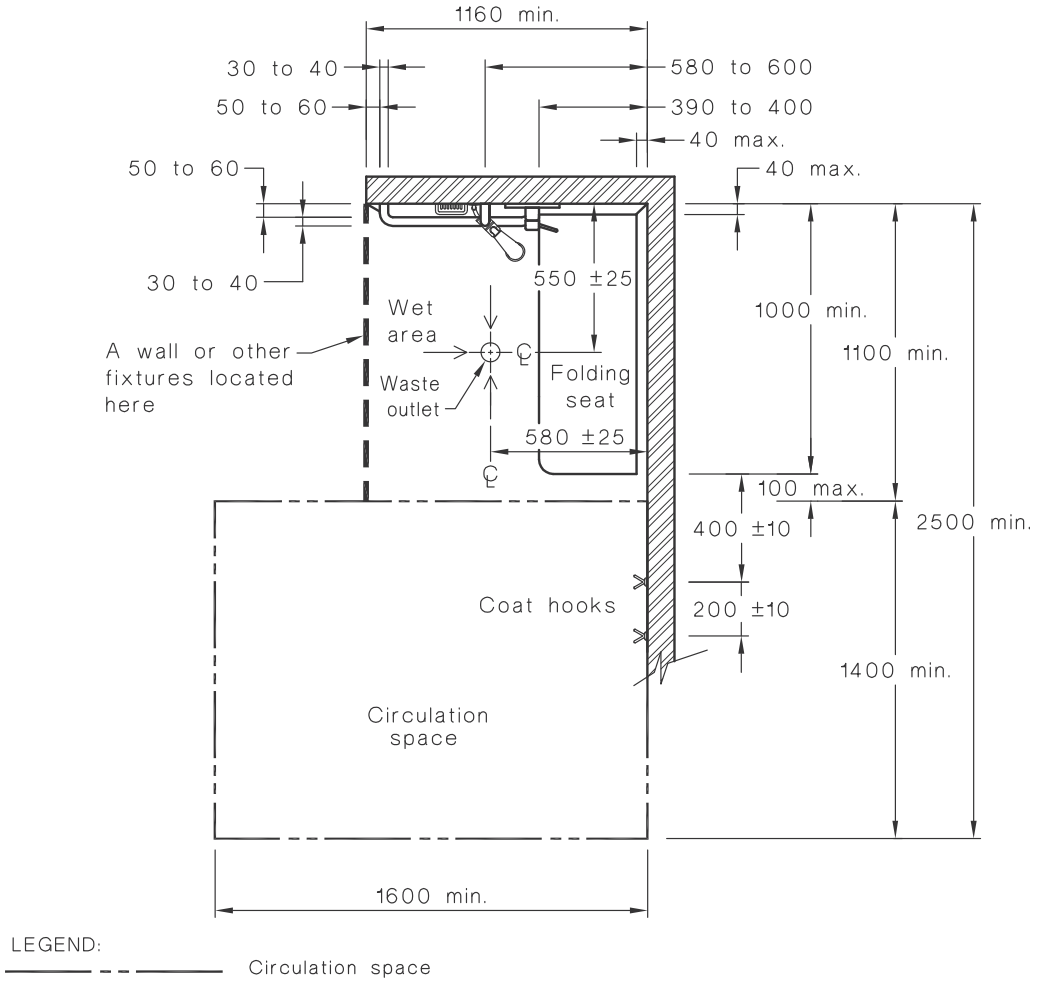


(b) Shower recess with a third side provided by a wall or other fixtures

FIGURE 47 (in part) SHOWER RECESS AND CIRCULATION SPACE—PLAN

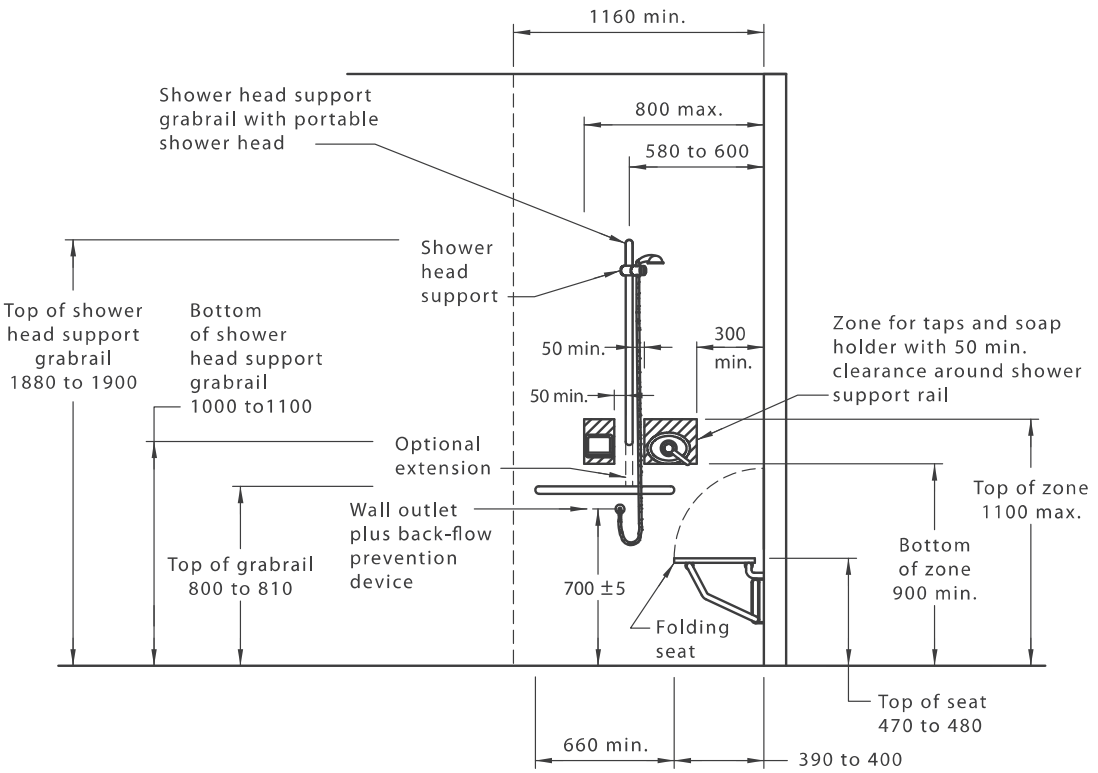


DIMENSIONS IN MILLIMETRES

FIGURE 48 SHOWER RECESS FITTINGS—ELEVATION

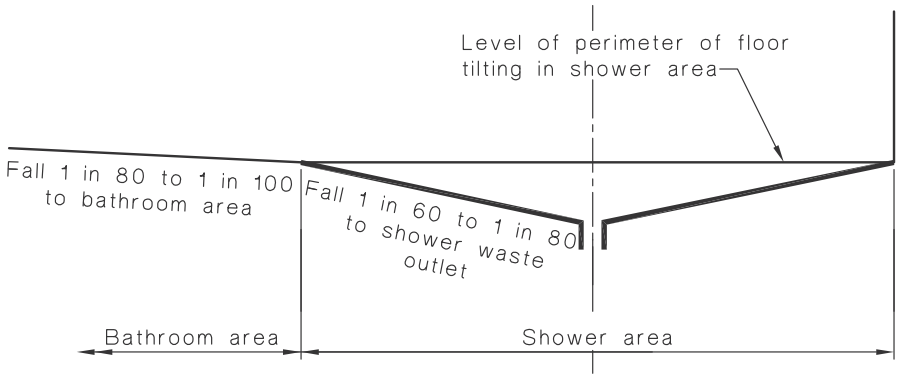


FIGURE 49 GRADES FOR BATHROOM AND SHOWER FLOORS

**15.5.3** *Opening shower screens*

The means of screening a shower recess shall be either by a curtain or a door system that maintains the required circulation space of 1600 mm × 2350 mm.

**15.5.4** *Grabrails*

Grabrails, as specified in Clause 17, shall be fixed on the walls in the positions shown in Figures 47 and 48. Taps, soap holder and shower head support grabrail, as shown in Figures 47 and 48 may encroach into the 600 mm clearance above the grabrail required by Clause 17(e).

**15.5.5** *Shower head support grabrail*

A shower head support grabrail, as specified in Clause 17, shall be fixed on the wall in the position shown in Figure 48.

**15.5.6** *Shower head*

A hand-held shower head shall be provided, which shall have a flexible hose of a minimum length of 1500 mm.

An adjustable shower head holder shall be provided to support the shower head and shall—

(a) be installed on the shower head holder support grabrail as shown in Figure 48;

(b) allow the graspable portion of the shower head to be positioned at various angles and heights;

(c) allow the graspable portion of the shower head to be located at heights between 1000 mm and 1800 mm above the plane of the finished floor; and

(d) allow access and adjustment from a seated position.

**15.5.7** *Soap holder*

The soap holder shall be located within the zone shown in Figure 48.

**15.5.8** *Taps*

Taps, as specified in Clause 15.2.1, shall be located within the zone shown in Figure 48.

**15.5.9** *Folding seat*

A foldable seat shall be provided inside the shower recess, as shown in Figures 47 and 48, and shall—

(a) be self-draining;

(b) be slip-resistant;

(c) have front corners that are rounded to a radius of 10 to 15 mm;

(d) have top edges that are rounded with a minimum radius of 2 to 3 mm; and

(e) shall fold in an upwards direction and when folded the grabrail shall be accessible.

Where drainage is provided by holes or slots in single unit seats or by gaps between slats in compound seats, the diameter of the holes, the width of the slots and the gaps between slats shall be between 4 to 6 mm.

The fastenings, materials and construction of the seat shall be able to withstand a force of 1100 N applied at any position and in any direction without failing or loosening of fastenings.

A1 **15.5.10** *Clothes hanging devices*

Two clothes hooks shall be installed within reach of the shower seat, as shown in Figure 47.

### 15.6 Circulation spaces in accessible sanitary facilities

The circulation spaces in accessible sanitary facilities shall be in accordance with Clause 15.2.8 and Figures 43 to 47 and 50. The following also apply:

(a) Circulation spaces, including door circulation spaces, may be overlapped.

(b) With the following exceptions, fixtures shall not encroach into circulation spaces:

A1 (i) The washbasin may encroach into the WC circulation space in accordance with Figure 43 and 50.

A1 (ii) *'deleted'*

(iii) The washbasin may encroach into the circulation space of the door in accordance with Figures 51(A) and 51(B).

NOTE: An example of an overlapping circulation space in a sanitary compartment is shown in Figure 52.

Clearances beneath the washbasin shall be in accordance with Clause 15.3 and door circulation spaces shall be in accordance with Clause 13.3 modified in accordance with Item (b)(ii) or (b)(iii) of this Clause, if appropriate.

A1

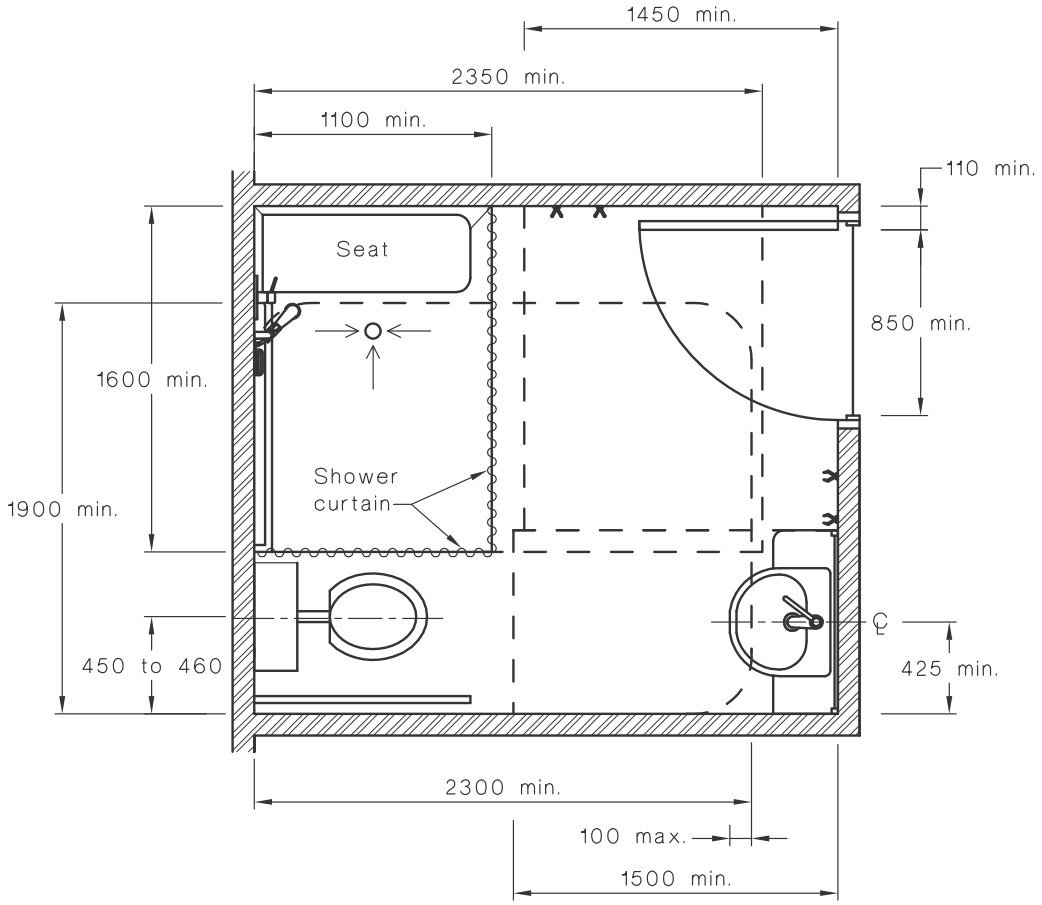


DIMENSIONS IN MILLIMETRES

FIGURE 50 SANITARY COMPARTMENT SHOWING OVERLAP OF WASHBASIN FIXTURE INTO SHOWER CIRCULATION SPACE

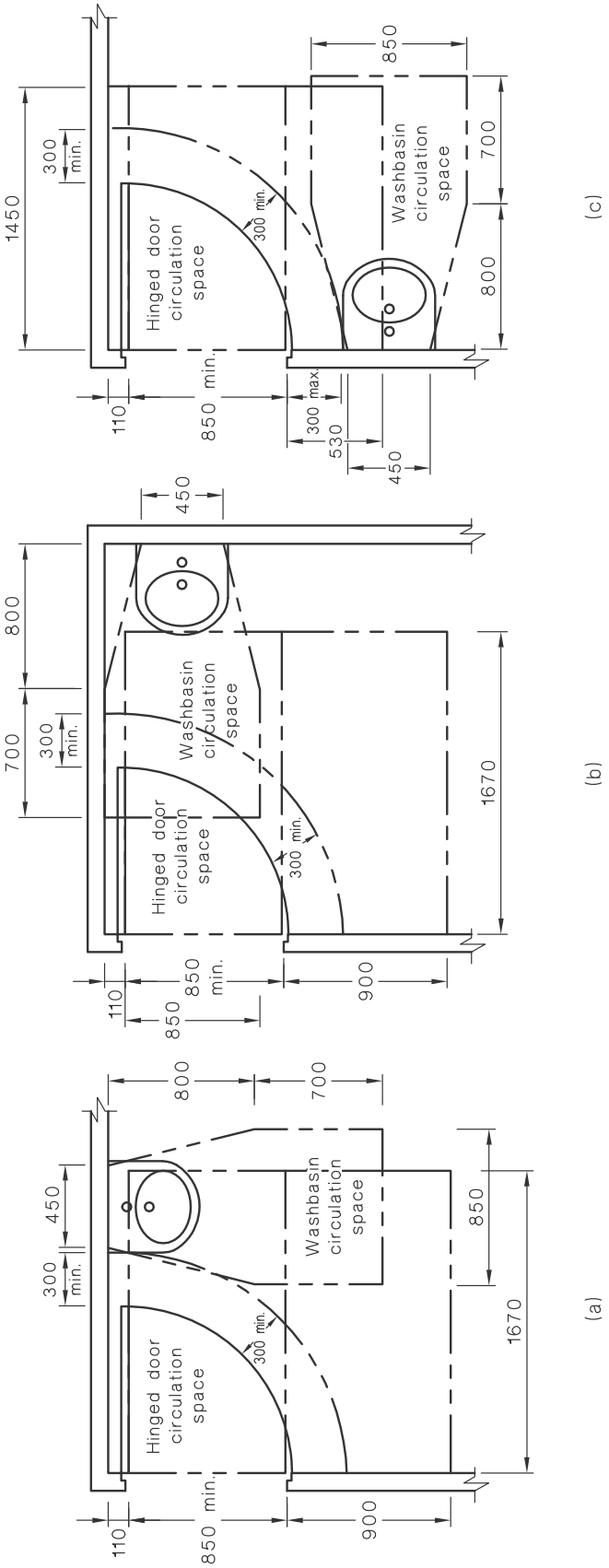


DIMENSIONS IN MILLIMETRES

FIGURE 51(A) ALLOWABLE ENCROACHMENT OF A WASHBASIN INTO HINGED DOOR CIRCULATION SPACE

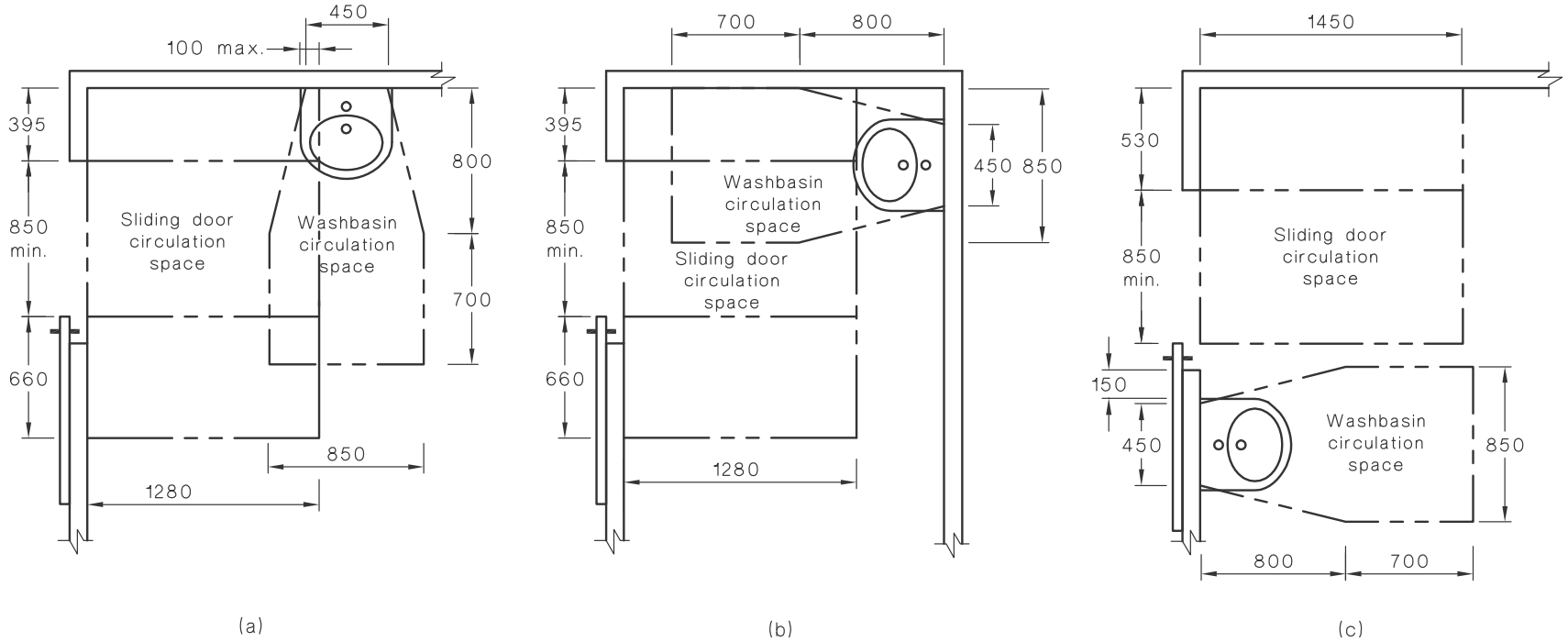


DIMENSIONS IN MILLIMETRES

FIGURE 51(B) OVERLAP OF WASHBASIN FIXTURE INTO DOOR CIRCULATION SPACE WHERE WASHBASIN IS LOCATED OPPOSITE A SLIDING DOOR

A1

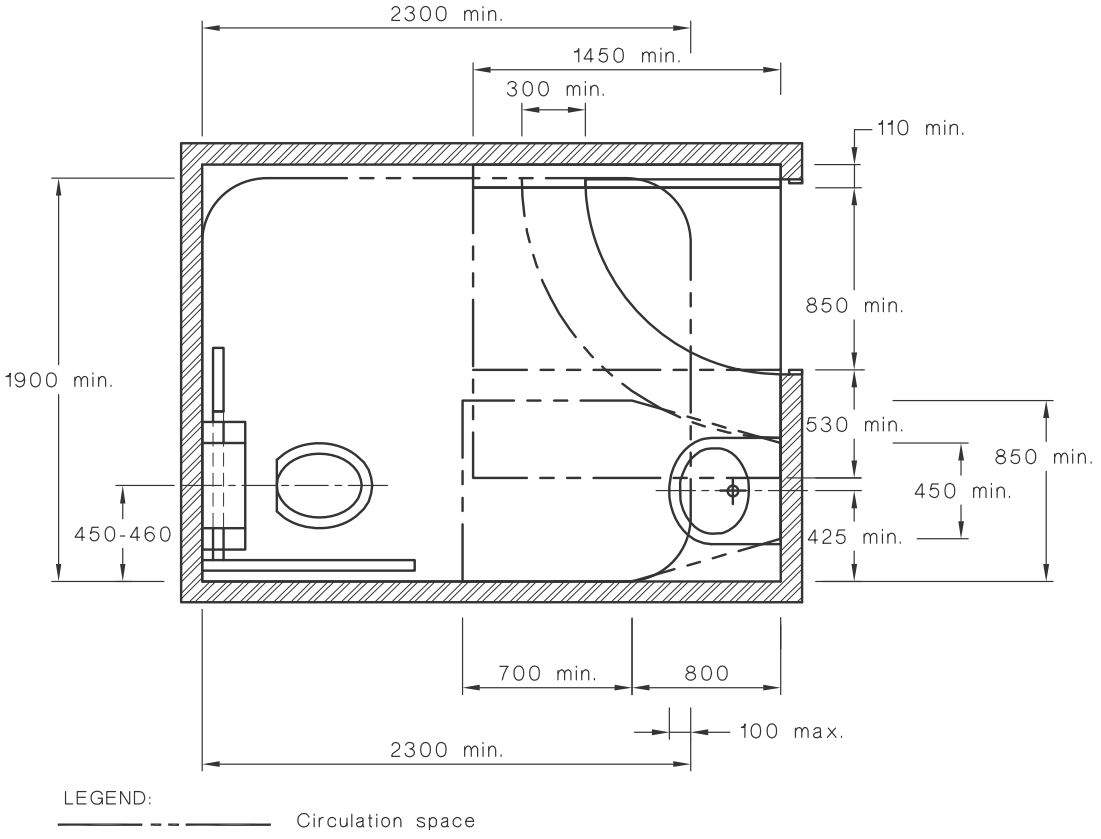


DIMENSIONS IN MILLIMETRES

FIGURE 52 EXAMPLE OF OVERLAPPING CIRCULATION SPACES IN A SANITARY COMPARTMENT

## 16 SANITARY COMPARTMENT FOR PEOPLE WITH AMBULANT DISABILITIES

### 16.1 General

Sanitary compartment for people with ambulant disabilities shall be in accordance with Figures 53(A) and 53(B).

### 16.2 Grabrails

Grabrails shall be installed in accordance with Clause 17 and Figure 53(A).

### 16.3 Doors

Doors to sanitary compartments for people with ambulant disabilities shall have openings with a minimum clear width of 700 mm, and shall comply with Figure 53(B).

Doors shall be provided with an in-use indicator and a bolt or catch. Where a snib catch is used, the snib handle shall have a minimum length of 45 mm from the centre of the spindle. In an emergency, the latch mechanism shall be openable from the outside.

### 16.4 Signage

Sanitary compartment for people with ambulant disabilities shall be identified by symbol or words, as specified in Clause 8.

### 16.5 Coat hook

A coat hook shall be provided within the sanitary compartment and at a height between 1350 mm to 1500 mm from the floor.

A1

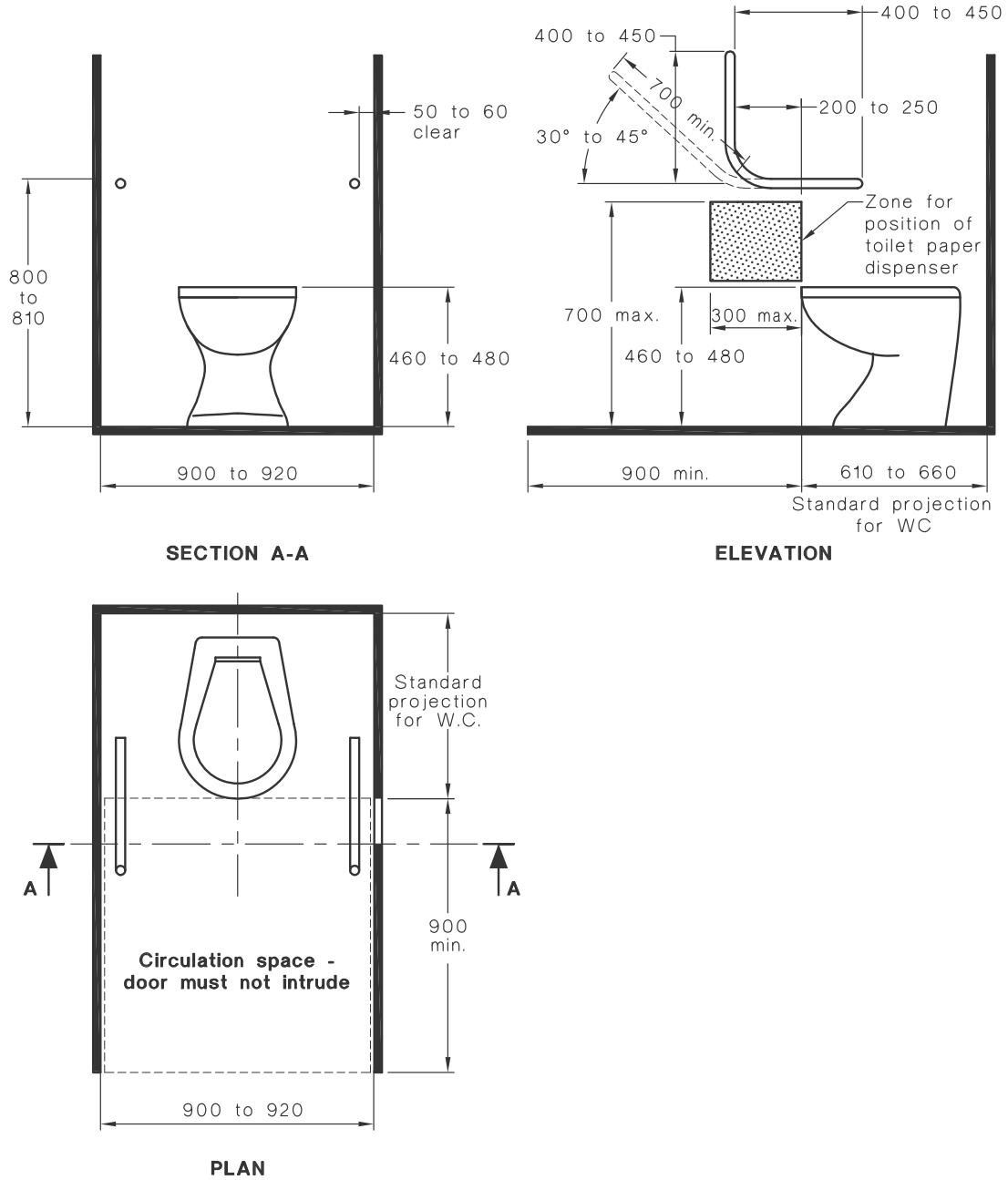


DIMENSIONS IN MILLIMETRES

FIGURE 53(A) SANITARY COMPARTMENT FOR PEOPLE WITH AMBULANT DISABILITIES—PLAN AND ELEVATION

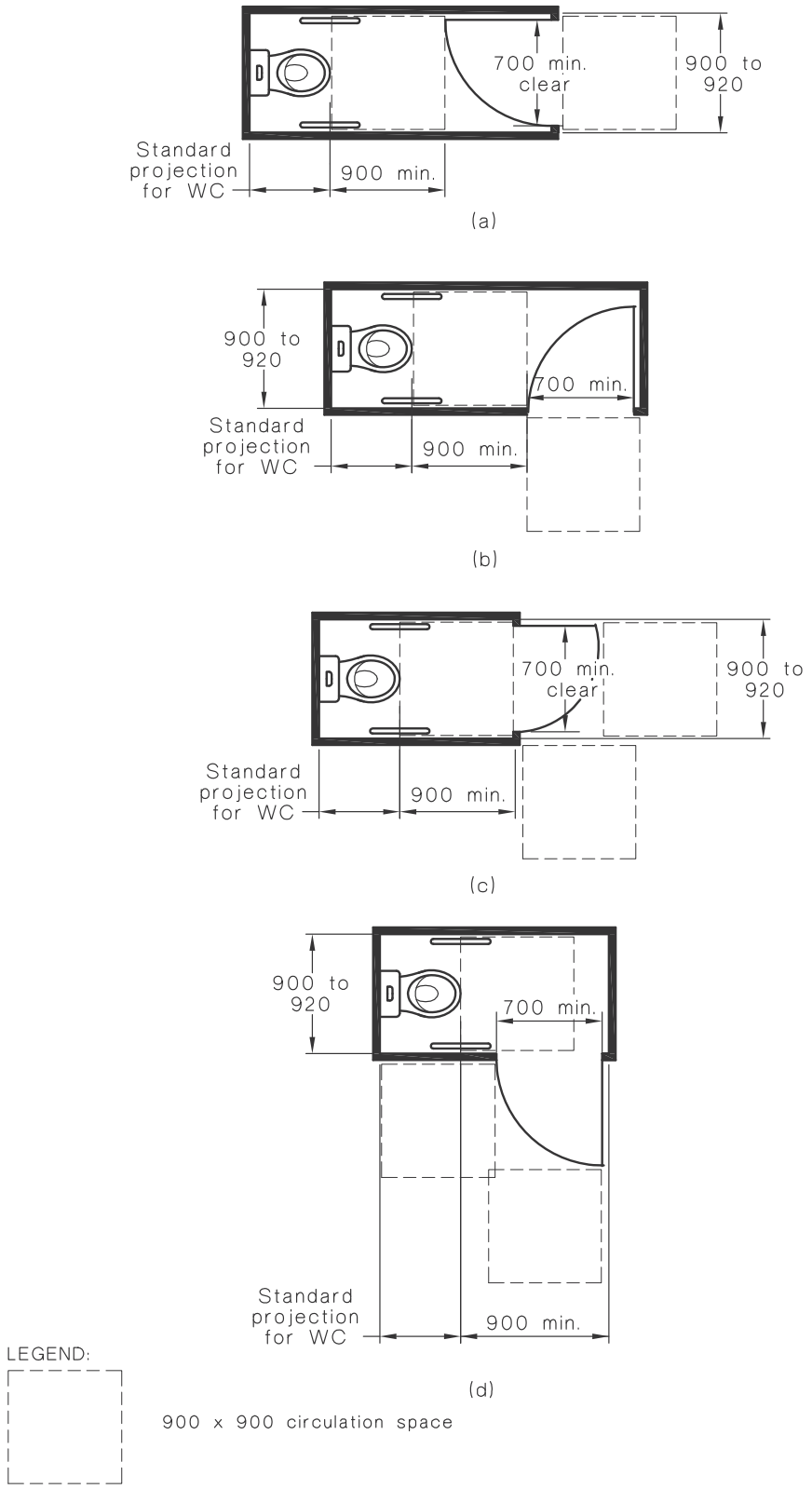


DIMENSIONS IN MILLIMETRES

FIGURE 53(B) SANITARY COMPARTMENT FOR PEOPLE WITH AMBULANT DISABILITIES—DOORWAY OPTIONS

# Minister's Specification

## SA 76D
## Swimming Pool Safety—new prescribed requirements for upgrading prescribed swimming pools

May 2014

Government of South Australia

Published by:
Building Policy Unit, Planning Division
Department of Planning, Transport and Infrastructure

**Minister's Specification SA 76D** May 2014

**Swimming Pool Safety**

## SCOPE

This Minister's Specification relates to any *prescribed swimming pool,* as defined in section 71AA of the Development Act 1993.

This Minister's Specification must be read in conjunction with section 71AA of the Development Act 1993 and regulation 76D of the Development Regulations 2008.

## INTERPRETATION

***child-resistant doorset*** has the same meaning as the definition in AS 1926.1.

***new prescribed requirements*** has the same meaning as the definition in section 71AA of the Development Act 1993.

***prescribed swimming pool*** has the same meaning as the definition in section 71AA of the Development Act 1993.

***swimming pool*** has the same meaning as the definition in section 71AA of the Development Act 1993.

## REFERENCED STANDARDS

**Table 1: Schedule of Referenced Standards**

| No. | Date | Title |
|---|---|---|
| **AS 1926** | | Swimming pool safety |
| Part 1 | 2012 | Safety barriers for swimming pools |
| Part 2 | 2007 | Location of safety barriers for swimming pools<br>Amdt 1<br>Amdt 2 |

## 1.0 Application

This Minister's Specification sets out the *new prescribed requirements* for the purpose of regulation 76D(1)(a) of the Development Regulations 2008.

## 2.0 New prescribed requirements

(a) Subject to (b), a *prescribed swimming pool* complies with the *new prescribed requirements* if it has safety barriers installed in accordance with AS 1926 Parts 1 and 2.

(b) A *child-resistant doorset* must not be used in a barrier for an outdoor *swimming pool*, except in situations specified in **3.0**.

## 3.0 Situations where a child-resistant doorset can form part of a barrier for an outdoor swimming pool

### 3.1 In-ground swimming pools

A *child-resistant doorset* can only be used to form part of a barrier for an outdoor *swimming pool* if the distance from the nearest part of the *swimming pool* to the door is less than 1.8 metres (Figure 1).

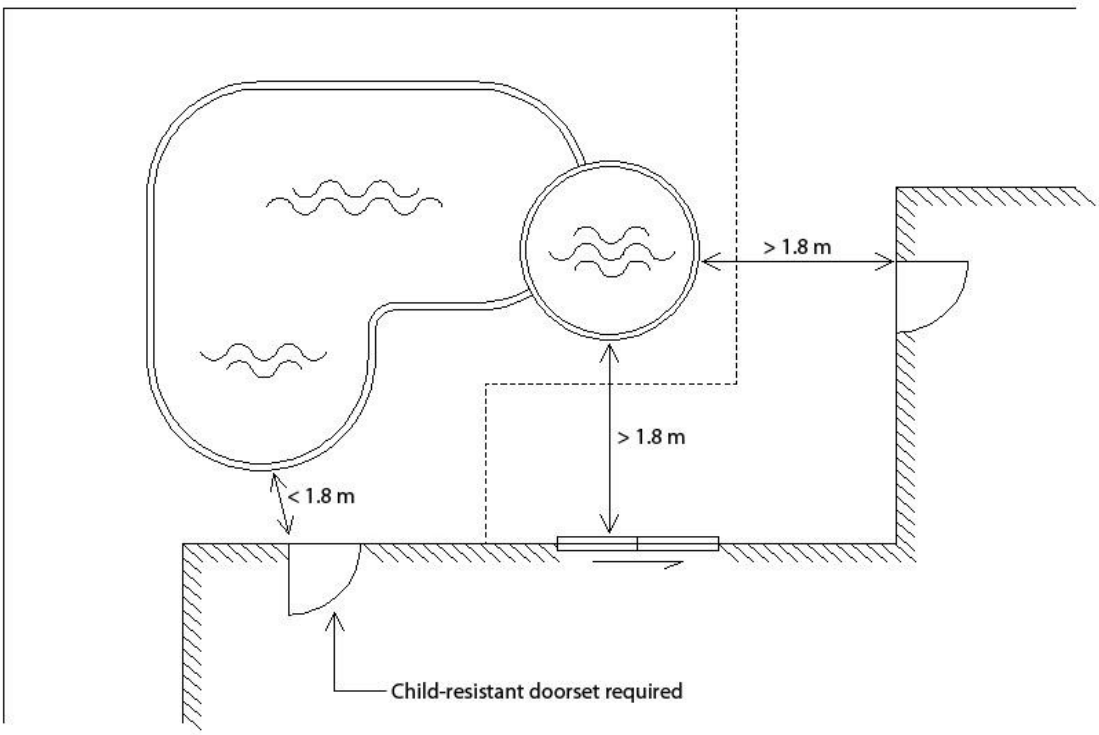


**Figure 1** In-ground swimming pools (including spa pools)

### 3.2 Aboveground swimming pools

A *child-resistant doorset* can only be used to form part of a barrier for an outdoor *swimming pool* if the distance from the nearest part of the *swimming pool* to the door, after the *swimming pool* has been re-positioned as far as possible away from the door, is less than 1.8 metres (Figure 2).

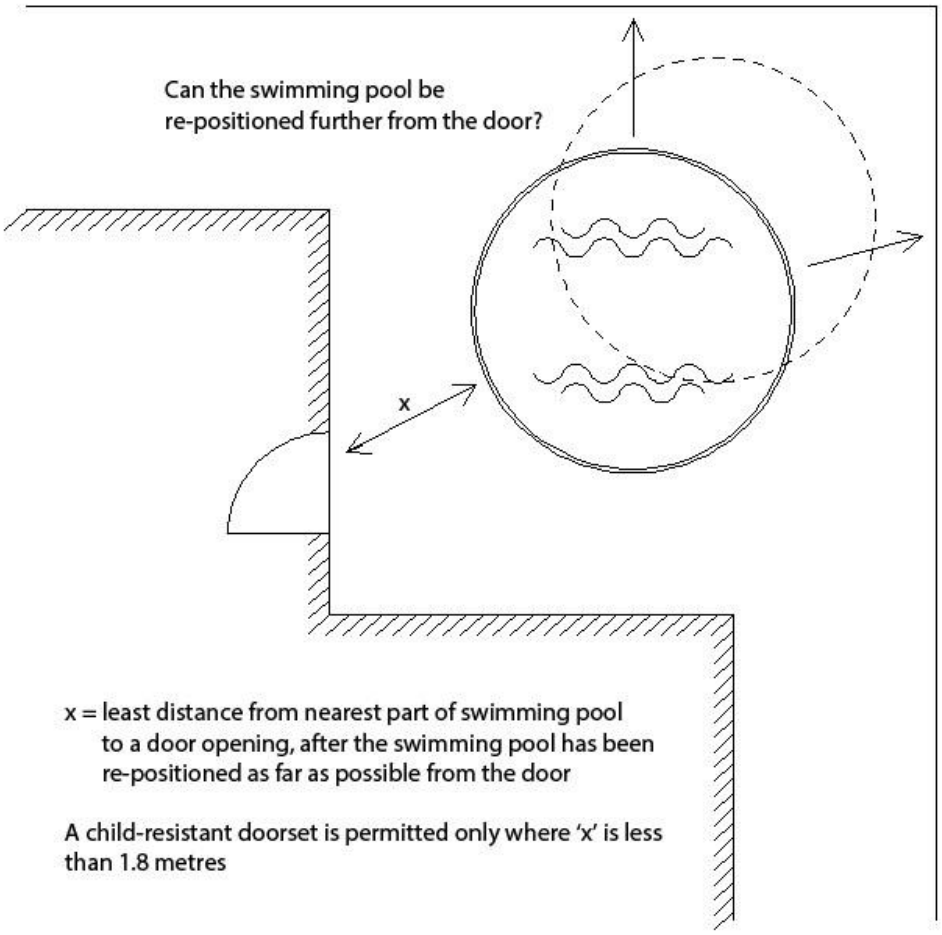


**Figure 2** Aboveground swimming pools (including spa pools)

A1

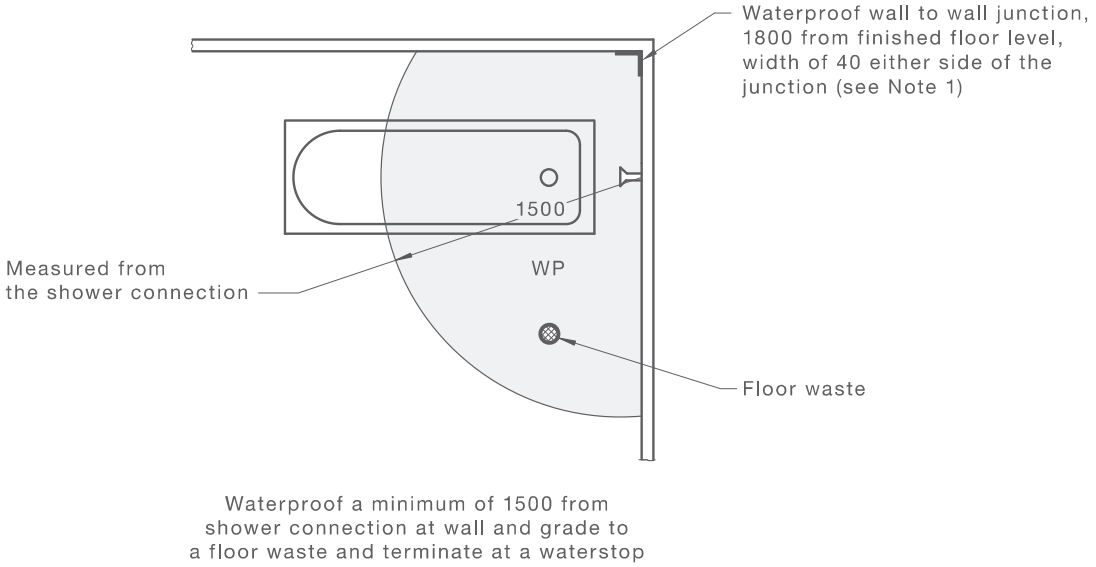


(a) Plan view

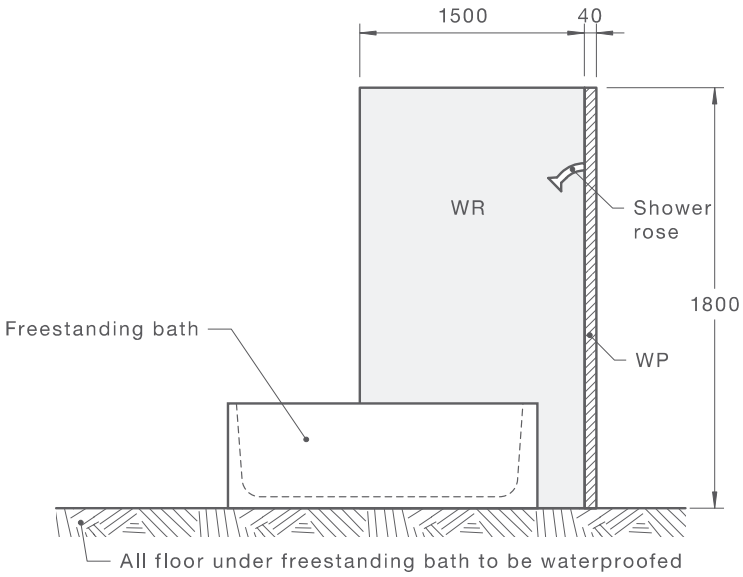


(b) Elevation

NOTES:

1 Waterproofing of all wall junction is only required if shower rose is located within 1500 from junction.

2 All floor waterproofing to terminate at a waterstop.

3 For timber floors, entire floor to be waterproofed.

DIMENSIONS IN MILLIMETRES

FIGURE 3.1A FREESTANDING BATHS

A1

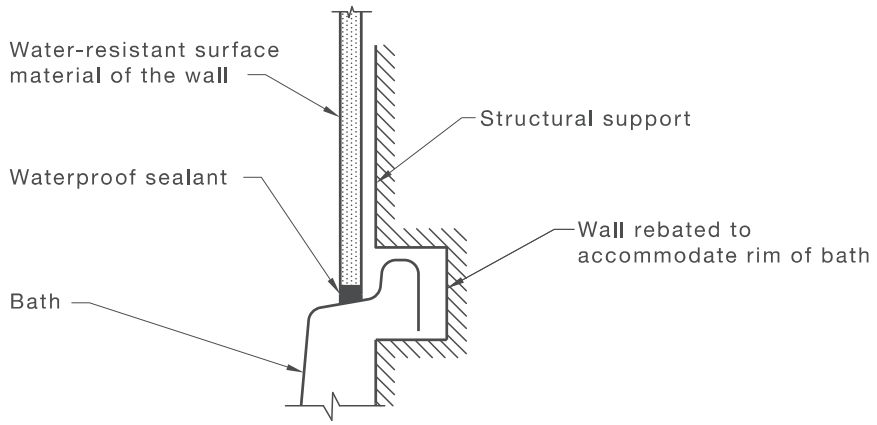


(a) Bath/wall junction—Recessed

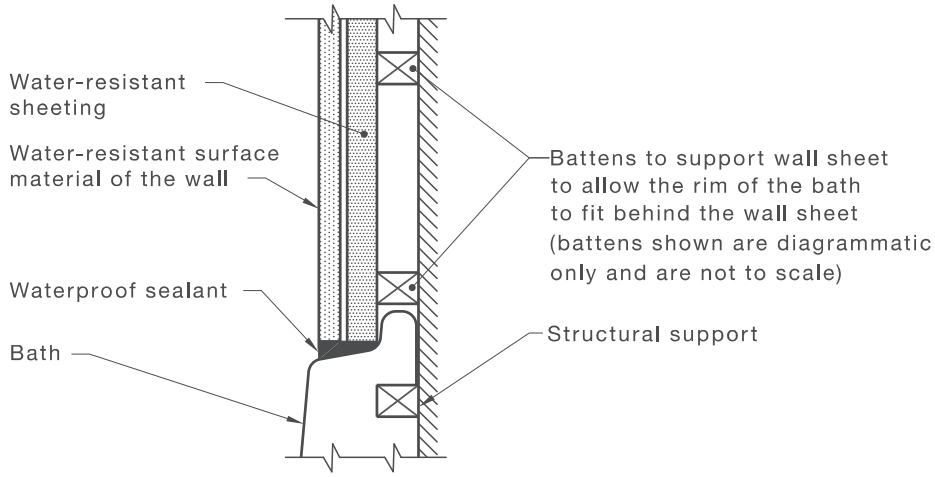


(b) Bath/wall junction—Battened

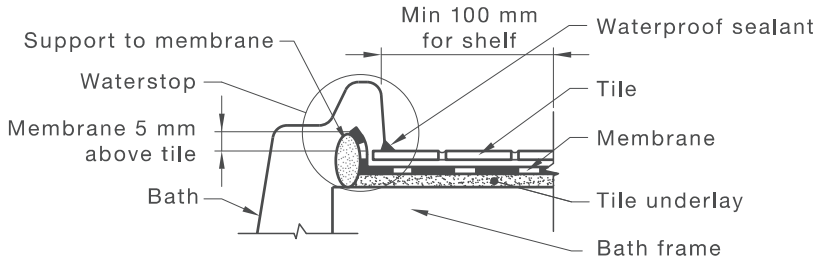


(i) Bath with rim

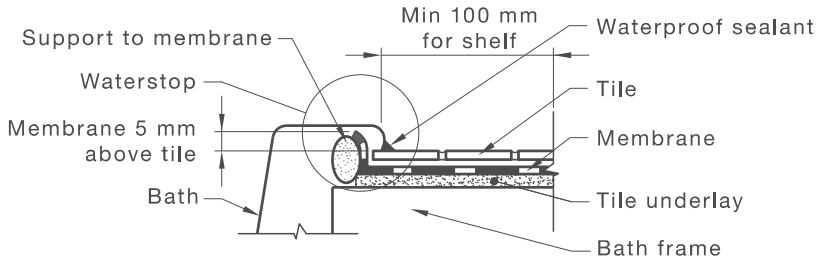


(ii) Bath without rim

(c) Bath/shelf junction (insert bath)

FIGURE 3.2 TYPICAL BATH JUNCTIONS

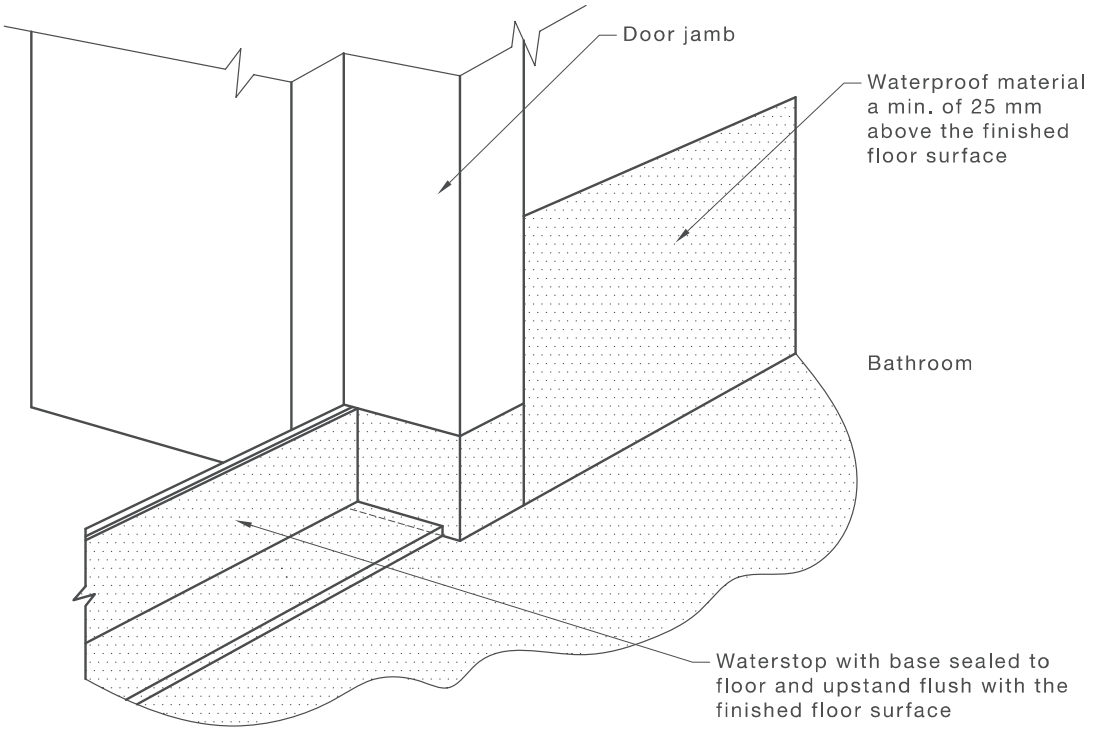


(a) Prior to installation of architrave

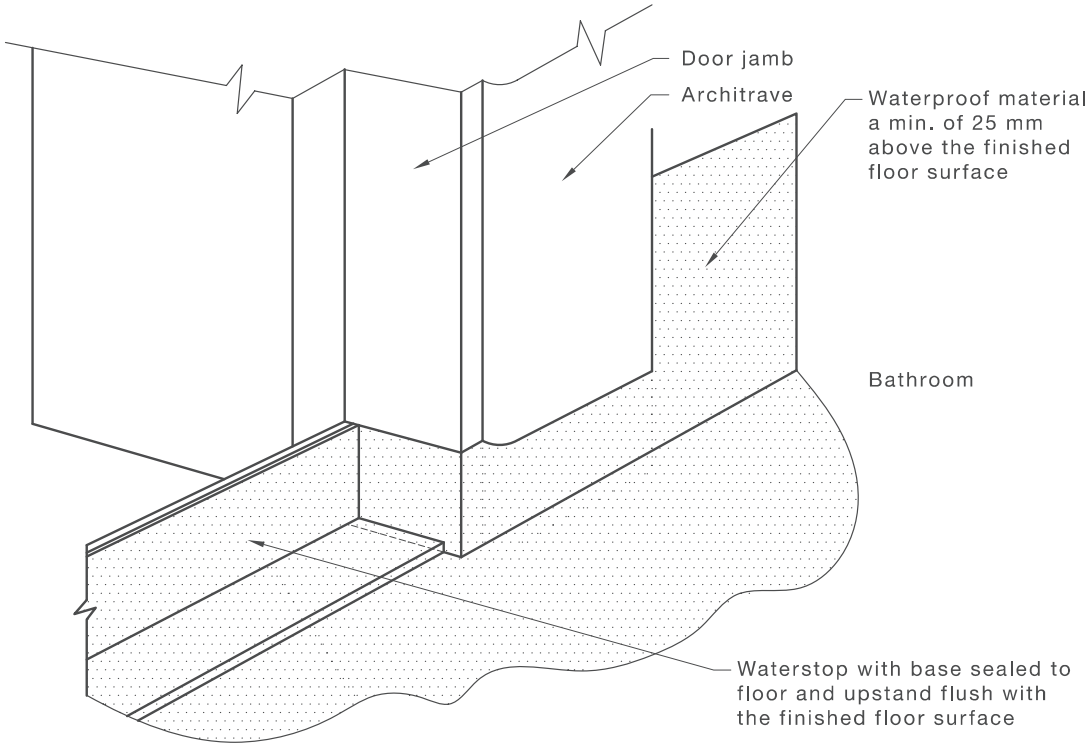


(b) After installation of architrave

FIGURE 3.3 TYPICAL BATHROOM DOOR DETAIL FOR WHOLE BATHROOM WATERPROOFING

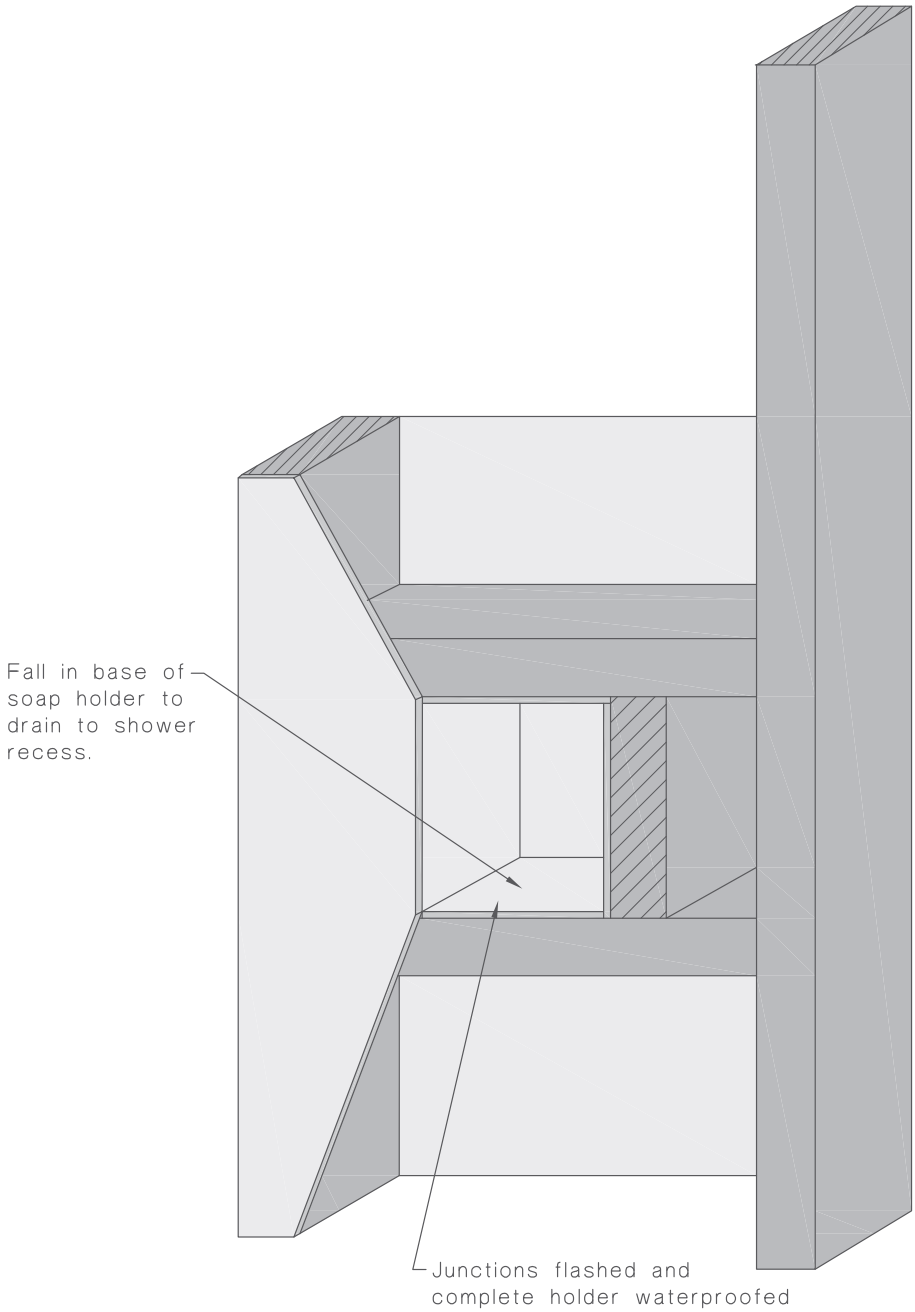


FIGURE 3.4 TYPICAL DETAIL FOR RECESSED SOAP HOLDERS

### 3.10.2 Tap penetrations through horizontal surfaces

Tap penetrations on horizontal surfaces surrounding baths and spas shall be waterproofed by sealing with proprietary flange systems or the tap body to the membrane, or substrate where a membrane is not required.

## 3.11 REQUIRED FLOOR WASTES FOR WET AREA FLOORS

Where a floor waste is required, the floor finish shall be constructed so that water flows to the waste without water being retained on the finished surface with the exception of residual water remaining due to surface tension.

NOTE: For additional information on floor gradients, see Appendix B.

A1

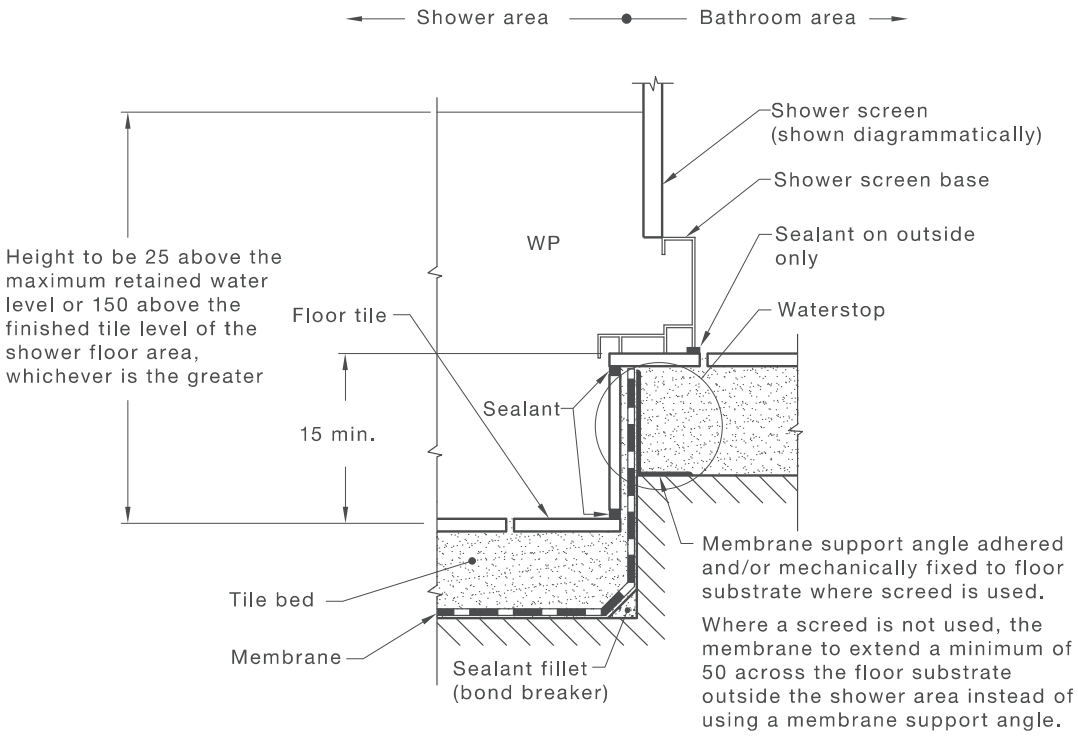


(a) Enclosed shower—Membrane below tile bed

A1

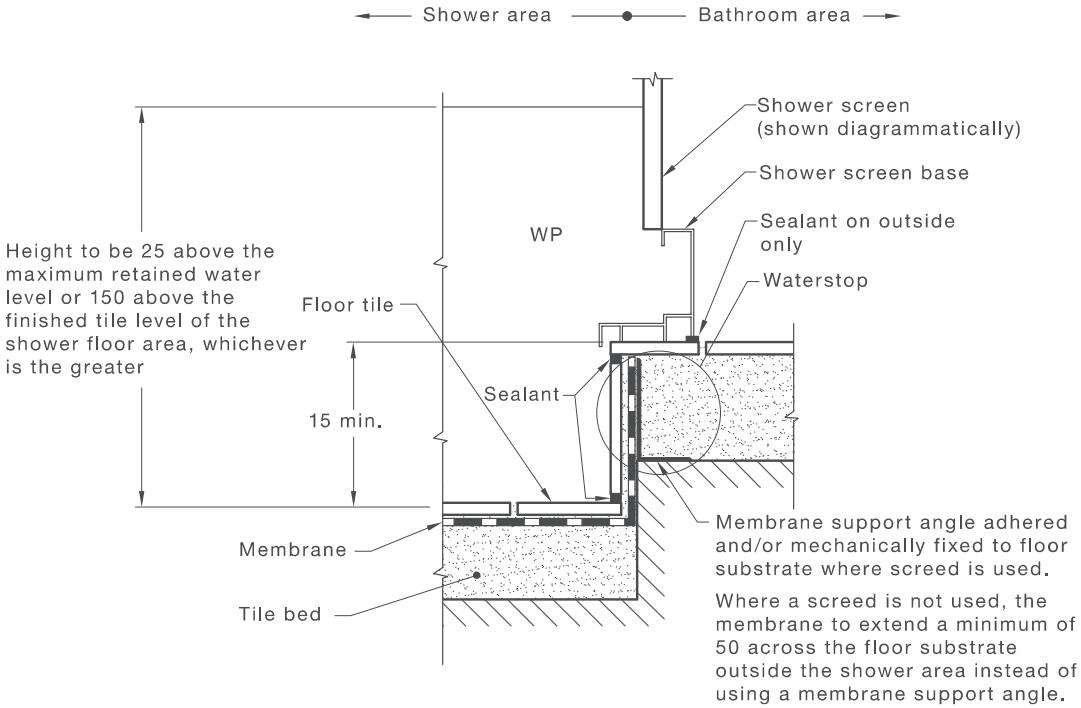


(b) Enclosed shower—Membrane above tile bed

DIMENSIONS IN MILLIMETRES

FIGURE 3.5 (in part) TYPICAL STEPPED DOWN SHOWER CONSTRUCTION

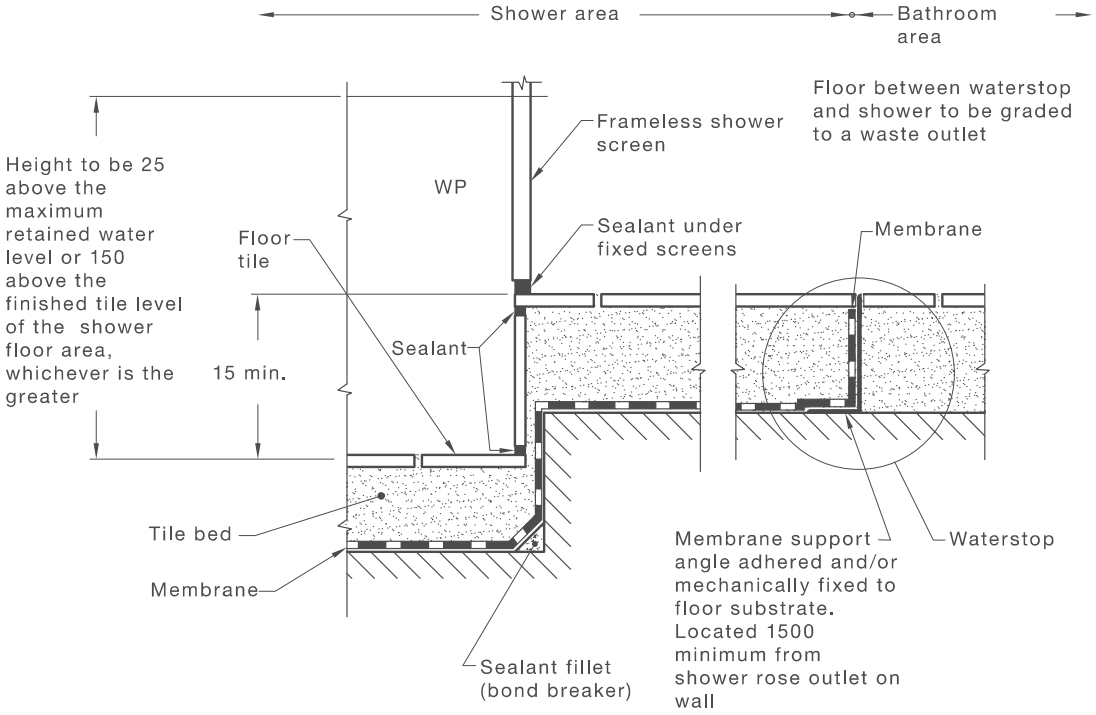


(c) Unenclosed shower—Membrane below tile bed

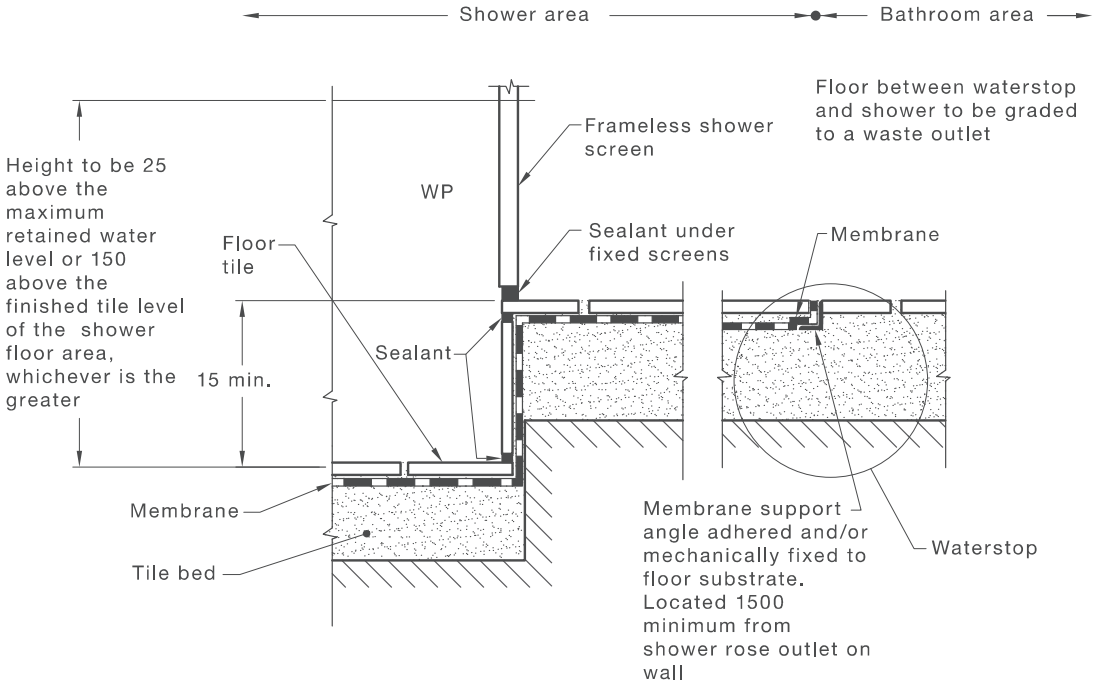


(d) Unenclosed shower—Membrane above tile bed

DIMENSIONS IN MILLIMETRES

FIGURE 3.5 (in part) TYPICAL STEPPED DOWN SHOWER CONSTRUCTION

### 3.13.3 Hob construction

Substrate for hobs shall be constructed of masonry, concrete, corrosion-resistant metal or similar material. Autoclaved aerated concrete may be used for internal membrane systems but shall not be used for external membrane systems. Where used, autoclaved aerated concrete shall be primed before the application of the membrane. All gaps, joints and intersections of the hob substrate shall be made flush before application of the membrane. The hobs shall be adequately secured to the floor and sealed against the wall prior to applying an internal membrane.

Timber shall not be used for hob construction.

### 3.13.4 Enclosed showers without hobs or set-downs

At the extremity of the shower area—

(a) where a shower screen is to be installed, a water stop shall be positioned so that its vertical leg will finish a minimum of 5 mm above the finished floor level (see Figure 3.6); and

(b) where the water stop intersects with a wall or is joined, the junction shall be waterproof.

NOTE: For a typical hobless construction, see Figure 3.6.

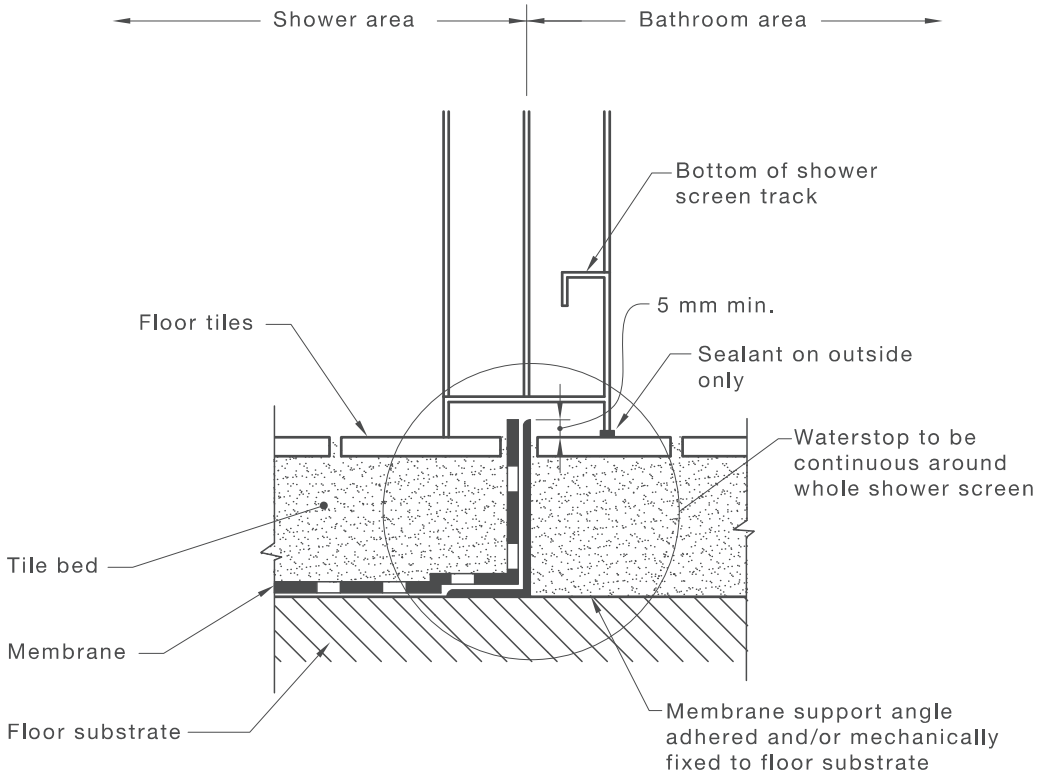


NOTE: Some shower screen extrusions may not permit the water stop extending into a rebate. A channel section may be needed to be installed over the water stop angle with the shower screen placed on top of the channel including return panels.

FIGURE 3.6 TYPICAL HOBLESS CONSTRUCTION

### 3.13.5 Unenclosed showers

This Clause sets out requirements for two types of unenclosed showers, as follows.

NOTE: See also Clause 3.18.1.1.

(a) *Type 1* A Type 1 unenclosed shower has a device that will restrict splashing during use (see Note 1).

A water stop shall be placed under the device and across the opening of the shower of a Type 1 shower screen.

NOTES:

1 A example of a Type 1 unenclosed shower is a frameless glass shower screen.

2 It is advisable to have either the screed drained or a membrane placed on the top of the screed to prevent water retention in the screed beyond the water stop.

(b) *Type 2* A Type 2 unenclosed shower does not have a device that will restrict splashing.

NOTE: An example of a Type 2 unenclosed shower is a shower for people with disabilities.

The water stop of a Type 2 shower shall be a distance of a minimum of 1500 mm from the wall connection of the shower rose.

For Type 1 and Type 2 unenclosed showers, the water stop shall have the vertical leg finish flush with the finish surface of the floor and, where the water stop intersects with or joins a wall, the junction shall be waterproof.

NOTE: If absorbent types of stone are used for flooring, they may discolour from shower water out to 1500 mm water stop. Efflorescence may also form in tile joints outside the shower area, and building elements such as vanity skirtings on the floor within the water stop area may deteriorate.

### 3.13.6 Additional requirements for bath end walls abutting a shower

Where a bath end wall is within a shower area, it shall be treated as a shower area wall.

### 3.13.7 Bond breaker installation for bonded membranes

Bond breakers shall be included at all wall/floor, hob/wall junctions and at movement joints where the membrane is bonded to the substrate. Bond breakers shall be of the type compatible with the flexibility class of the membrane to be used.

NOTES:

1 For appropriate bond breakers, see Table 3.2.

2 Typical details for bond breakers are shown in Figure 3.7.

3 Additional information on bond breakers is given in Appendix A.

## TABLE 3.2

## APPROPRIATE BOND BREAKER

| Membrane class | Elongation at break | Minimum bond breaker/tape width to bridge joints opening up by 5 mm |
|---|---|---|
| I | <60% | 75 mm with backing rod |
| II | 60% to 300% | 35 mm |
| III | >300% | 12 mm |

NOTES:

1 Bond breakers for Class I membranes (low extensibility) allow the membrane to flex rather than stretch.

2 Bond breakers for Class II membranes (medium extensibility) allow the membrane to stretch. If a tape is used as a bond breaker, either the membrane will not bond to the tape or the tape will have elastic properties similar to the membrane; for example, for a Class II membrane, a 35 mm wide bond breaker/tape should be applied over a joint to accommodate the joint opening up by up to 5 mm.

3 Bond breakers for Class III membranes (high extensibility) allow the membrane to have even thickness.

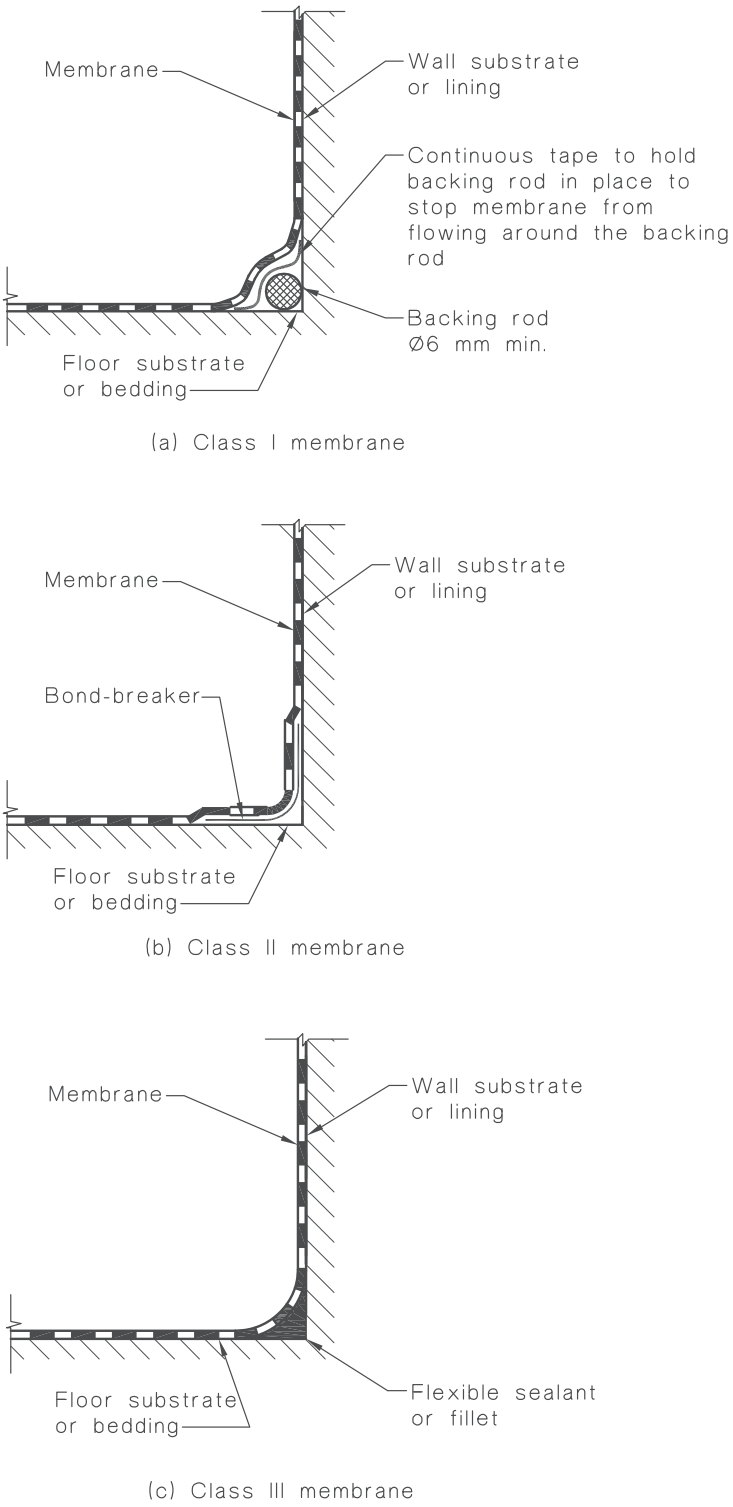


FIGURE 3.7 TYPICAL BOND BREAKER DETAILS

### 3.13.8 Vertical membrane termination

The membrane shall be applied over the floor substrate and up the vertical face of the wall—

(a) for showers with hobs and step-downs, a minimum height of 150 mm above the finished tile level of the floor or 25 mm above the maximum retained water level, whichever is the greater;

(b) for hobless showers, a minimum height of 150 mm above the highest finished tile level of the floor within the shower area; and

(c) for vertical flashing in shower areas, as specified in Clause 3.9.2.

## 3.14 MEMBRANE TO DRAINAGE CONNECTION

### 3.14.1 Termination to a drainage flange

For membrane drainage connections in other floors, any one of the following shall apply:

(a) A drainage flange shall be installed with the waterproofing membrane terminated at/in the drainage flange to provide a waterproof connection.

NOTES:

1 For typical membrane termination at drainage outlet, see Figure 3.8.

2 Drainage flanges may be set into the floor or fixed to the top surface of the floor substrate or tile bed.

(b) Where a prefabricated shower tray is used, provision shall be made to drain the tile bed and provide a waterproof connection to the drain.

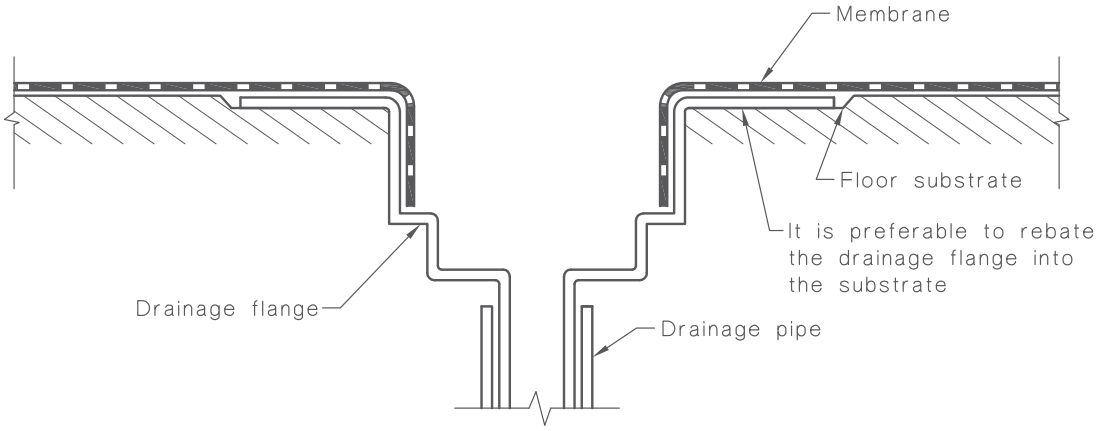


FIGURE 3.8 TYPICAL MEMBRANE TERMINATION AT DRAINAGE FLANGE

### 3.14.2 Floor waste

The floor waste shall be of sufficient height to suit the thickness of the tile and tile bed at the outlet position. The drainage flange/floor waste shall drain at the membrane level.

### 3.14.3 Termination to a drainage channel

The waterproof drainage shall be continuous for the membrane into the drainage outlet. Where the drainage channel does not have an integral horizontal surface of 50 mm for termination of the membrane, the membrane shall be continuous underneath the drainage channel, terminating at a recessed drainage flange.

NOTE: For a typical application of a membrane termination to a drainage channel, see Figure 3.9.

When the drainage channels are installed against a wall, they shall not compromise the waterproofing requirements of the wall/floor junctions.

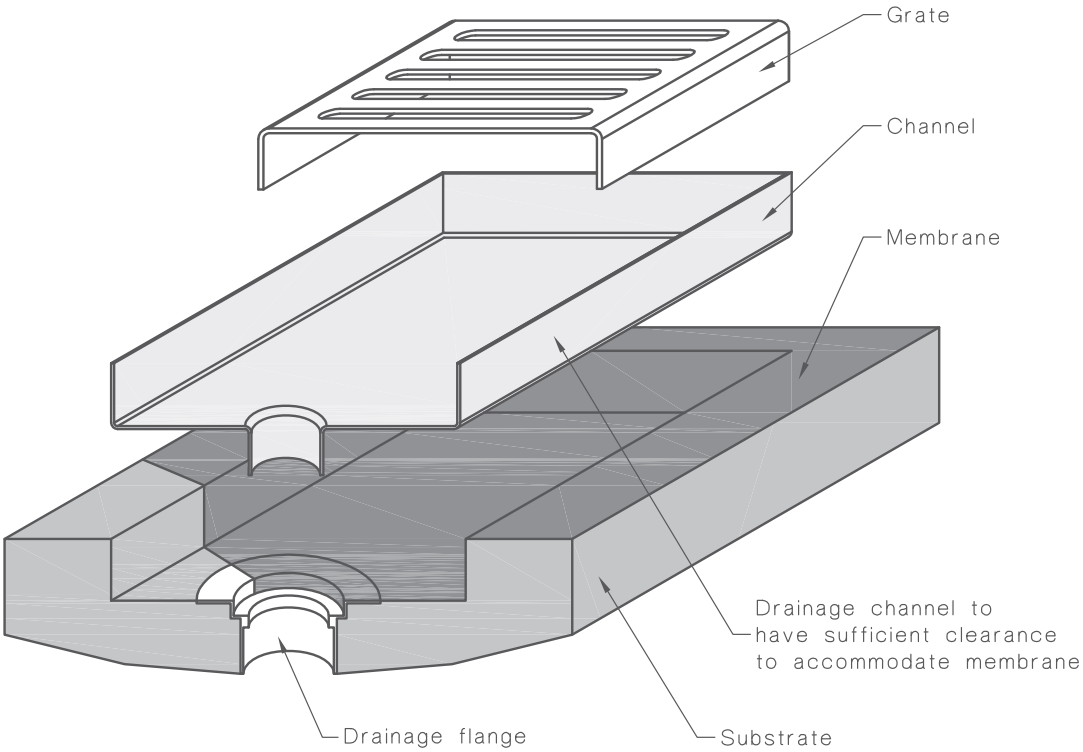


FIGURE 3.9 TYPICAL MEMBRANE TERMINATION AT DRAINAGE CHANNEL

## 3.15 INSTALLATION OF AN INTERNAL MEMBRANE

### 3.15.1 Membrane application

**3.15.1.1** *General*

In addition to the requirements of Clauses 3.12 and 3.13, the requirements of this Clause shall apply also for internal membranes.

**3.15.1.2** *Termination of membranes at showers with hobs*

With the exception of metal angle hobs, the membrane shall be brought up over the top of the hob, down the outside face and terminate a minimum 50 mm onto the floor.

NOTE: For a typical application, see Figure 3.10.

For metal angle hobs, the membrane shall be terminated within 5 mm from the top of the angle, and any gap between the shower screen and the angle shall be filled with a sealant.

The extent of the membrane for an internal shower tray shall be as shown in Figure 3.11(a).

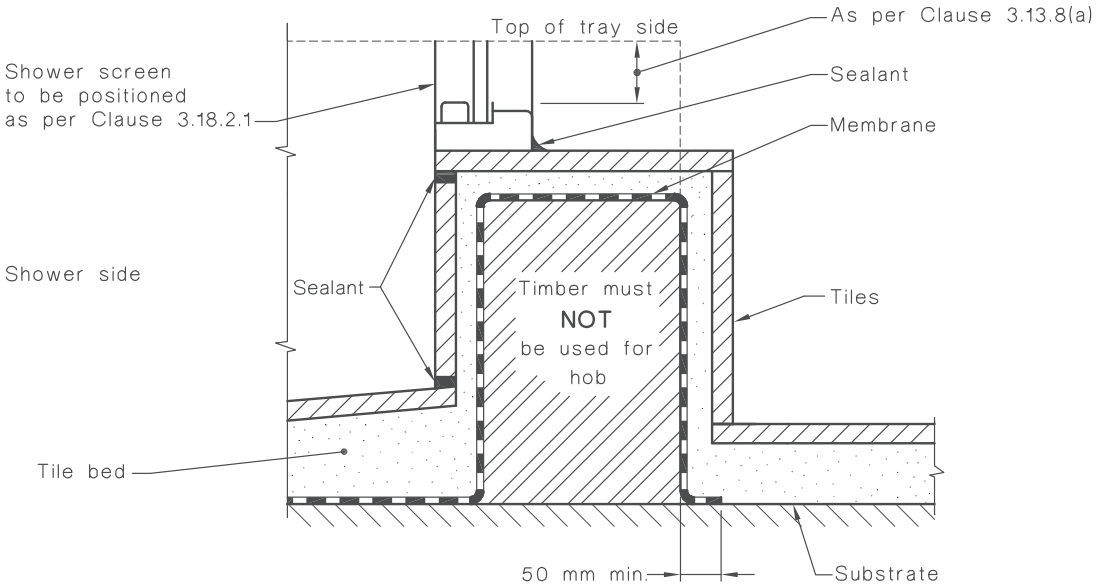


(a) Enclosed shower with hob

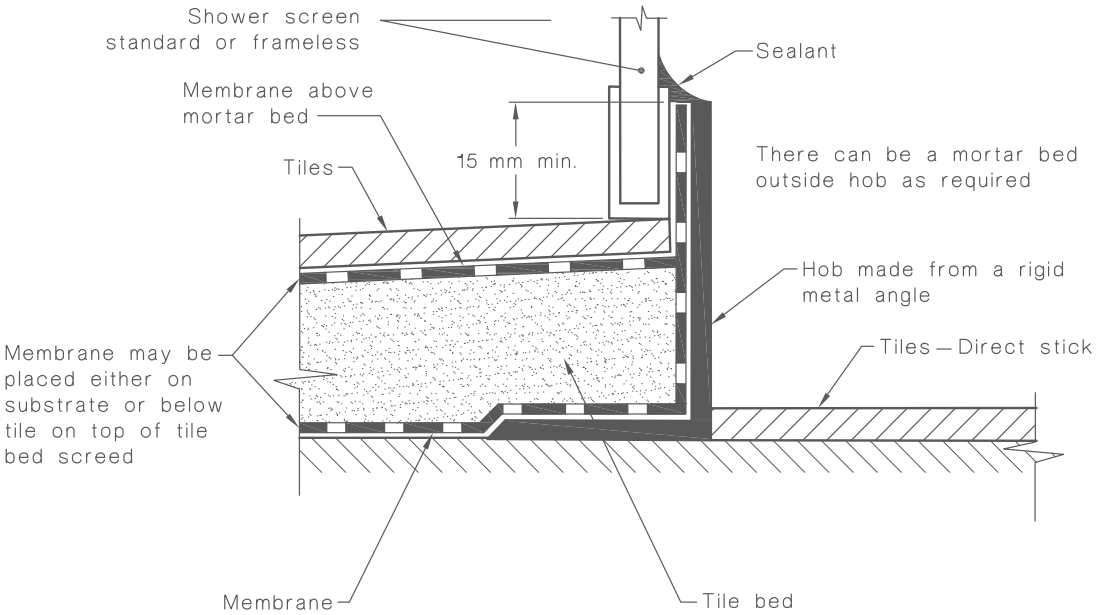


(b) Enclosed shower on flat substrate

NOTE: Membrane shown on substrate and above the tile bed for diagrammatic purposes only.

FIGURE 3.10 TYPICAL HOB CONSTRUCTION—INTERNAL MEMBRANE

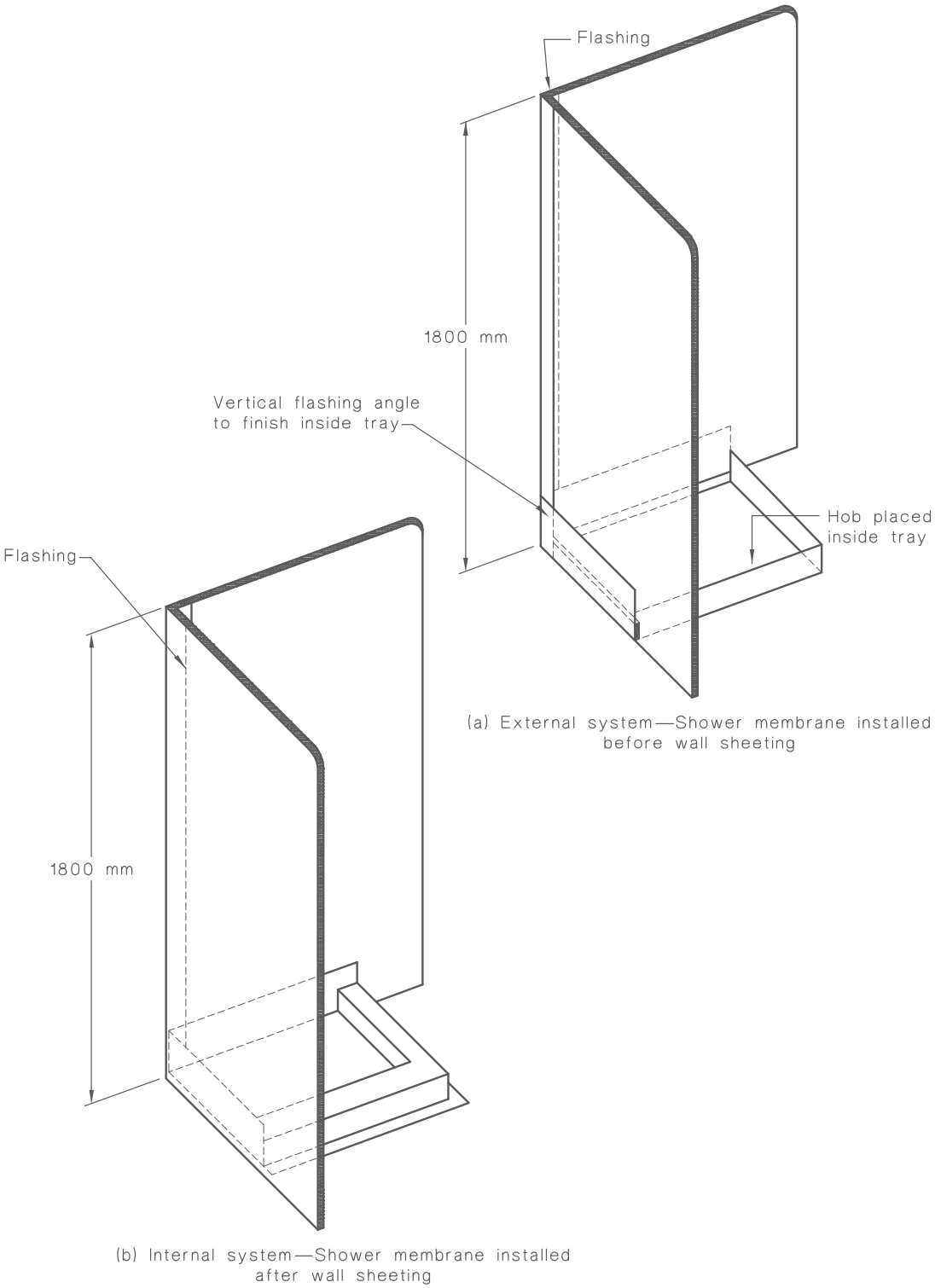


FIGURE 3.11 SHOWER CONSTRUCTION

**3.15.1.3** *Termination of membranes at enclosed showers without hobs*

The membrane shall be brought to the top of the floor finish, except where it is under a shower screen where it shall terminate a minimum of 5 mm above the finished tile surface.

NOTE: For a typical application, see Figure 3.6.

## 3.16 INSTALLATION OF AN EXTERNAL MEMBRANE

### 3.16.1 Membrane application

**3.16.1.1** *General*

Where the membrane is fabricated from a flexible material, the top edges shall be fixed to the wall. Fixing penetrations shall be a minimum of 100 mm above the finished tile level of the shower area. All fixings shall be compatible with the membrane and shall be non-corrosive.

**3.16.1.2** *Showers with hobs*

The hob shall be included within the finished size of the shower membrane and the membrane shall finish at the underside of the tile that forms the top of the hob.

NOTE: Typical hob construction for an external membrane is shown in Figure 3.12.

The extent of the membrane for an external shower tray shall be as shown in Figure 3.11.

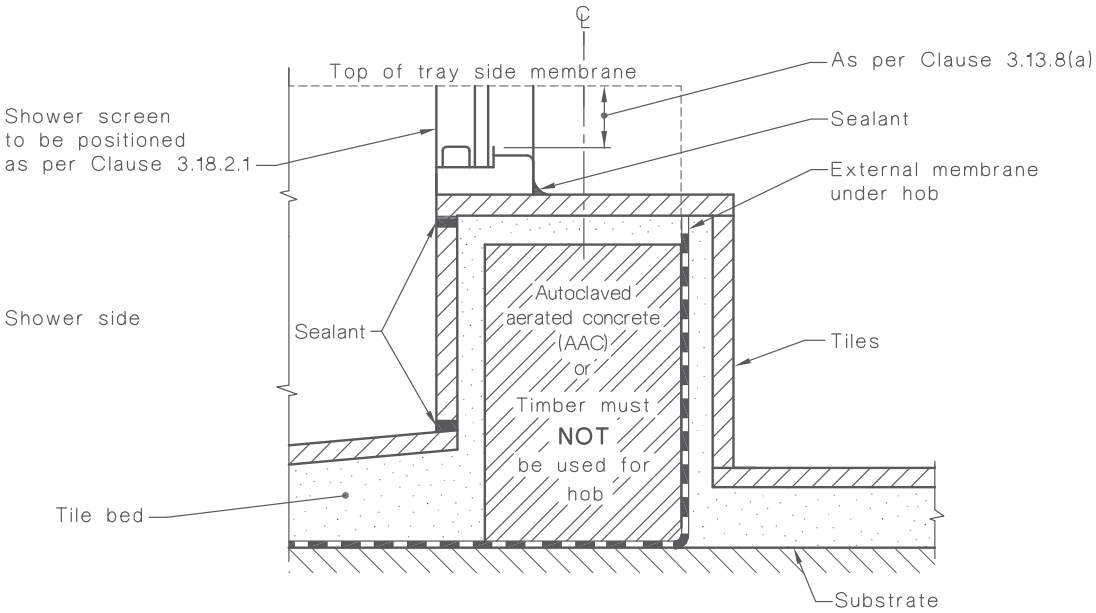


FIGURE 3.12 TYPICAL HOB CONSTRUCTION—EXTERNAL (PREFORMED) MEMBRANE

### 3.16.2 Base termination of vertical flashing

Vertical flashings in internal corners shall extend into the external membrane by a minimum of 25 mm.

### 3.16.3 Drainage riser connection

**3.16.3.1** *Preformed trays*

The drainage riser shall be connected to the tray with a waterproof joint.

**3.16.3.2** *Made in situ shower trays*

A drainage flange shall be installed with the waterproofing membrane terminating in the drainage flange at not less than 20 mm.

The membrane shall be able to form a permanent seal to the drainage flange.

NOTE: For a typical membrane extension, see Figure 3.8.

## 3.17 DOORJAMBS AND ARCHITRAVES

Where the bottom of doorjambs and architraves do not finish above the floor tiling, the portion of the doorframes and architraves below the floor tiling shall be waterproofed to provide a continuous seal between the perimeter flashing and the water stop.

NOTES:

1 For typical door detail, see Figure 3.3.

2 Where possible, the doorjambs and architraves should be installed above the floor tiling.

## 3.18 SHOWER SCREEN

### 3.18.1 General

**3.18.1.1** *Unenclosed shower screen*

An unenclosed shower screen consists of—

(a) a frameless shower screen, unless the shower screen is fitted with seals and deflectors, all of which control the spread of water from the shower area; or

(b) a shower screen less than 900 mm long over a bath; or

(c) a shower area where a curtain is hung on a rod.

Unenclosed shower areas are not suitable for use directly adjacent to doorways unless the doorway is protected against water exiting through the doorway.

**3.18.1.2** *Enclosed shower screen*

For an enclosed shower, the shower screen shall be designed and installed to prevent the spread of water from the shower enclosure.

An enclosed shower screen consists of—

(a) a fully framed (including sill) shower screen where the water from the shower rose is controlled to within the shower area; or

(b) a partly or semi frameless shower screen where the vertical edges of the unframed panels are fitted with suitable seals or where panels overlap one another (and where a sill is included); or

(c) a frameless shower screen that is fitted with seals and deflectors, to control the spread of water within the shower area.

NOTE: Where a shower screen is classified as unenclosed, the water stop and the positioning of the waterproofing of the floor should be as specified in Clause 3.13.5.

### 3.18.2 Enclosed shower screen placement

**3.18.2.1** *Showers with hobs*

The shower screen shall be installed so as to ensure it is—

(a) flush with the shower area side of the hob;

(b) overhanging in to the shower area; or

(c) inside the hob.

NOTE: A self-draining sub-sill is considered to be part of the shower screen.

**3.18.2.2** *Showers with step-downs*

The shower screen shall be installed so as to ensure it is—

(a) flush with the finished vertical surface of the step-down

(b) overhanging into the shower area; or

(c) inside the step-down of the shower area.

**3.18.2.3** *Showers without hobs or step-downs*

The shower screen shall incorporate or be mounted on an inverted channel, and positioned over the top of the water stop that defines the shower area.

NOTE: For a typical hobless construction, see Figure 3.6.

**3.18.2.4** *Bath end walls and nib walls abutting a shower*

The shower screen shall be positioned so that the bottom edge within the shower area is either flush with the outside edge of the bath or overhanging into the shower area.

NOTE: A self-draining sub-sill is considered to be part of the shower screen.

A1

# APPENDIX C

# EXTENT OF WATERPROOFING

(Informative)

This Appendix is based on Table F1.7 (BCA, Volume 1) and Table 3.8.1.1 (BCA, Volume 2) of the National Construction Code (NCCA).

Table C1 is reproduced from Table F1.7, which lists the NCC requirements for waterproofing and water resistance for building elements in wet areas. Figures C1 and C4 provide a diagrammatic representation of the extent of waterproofing stipulated in Tables F1.7 and 3.8.1.1 of the NCC.

Where the shower shown in the Figures is not enclosed, the wet area is to be taken as 1500 mm from the shower connection.

NOTE: User of this Standard should refer to the current edition of the NCC for any changes to the Tables.

A1

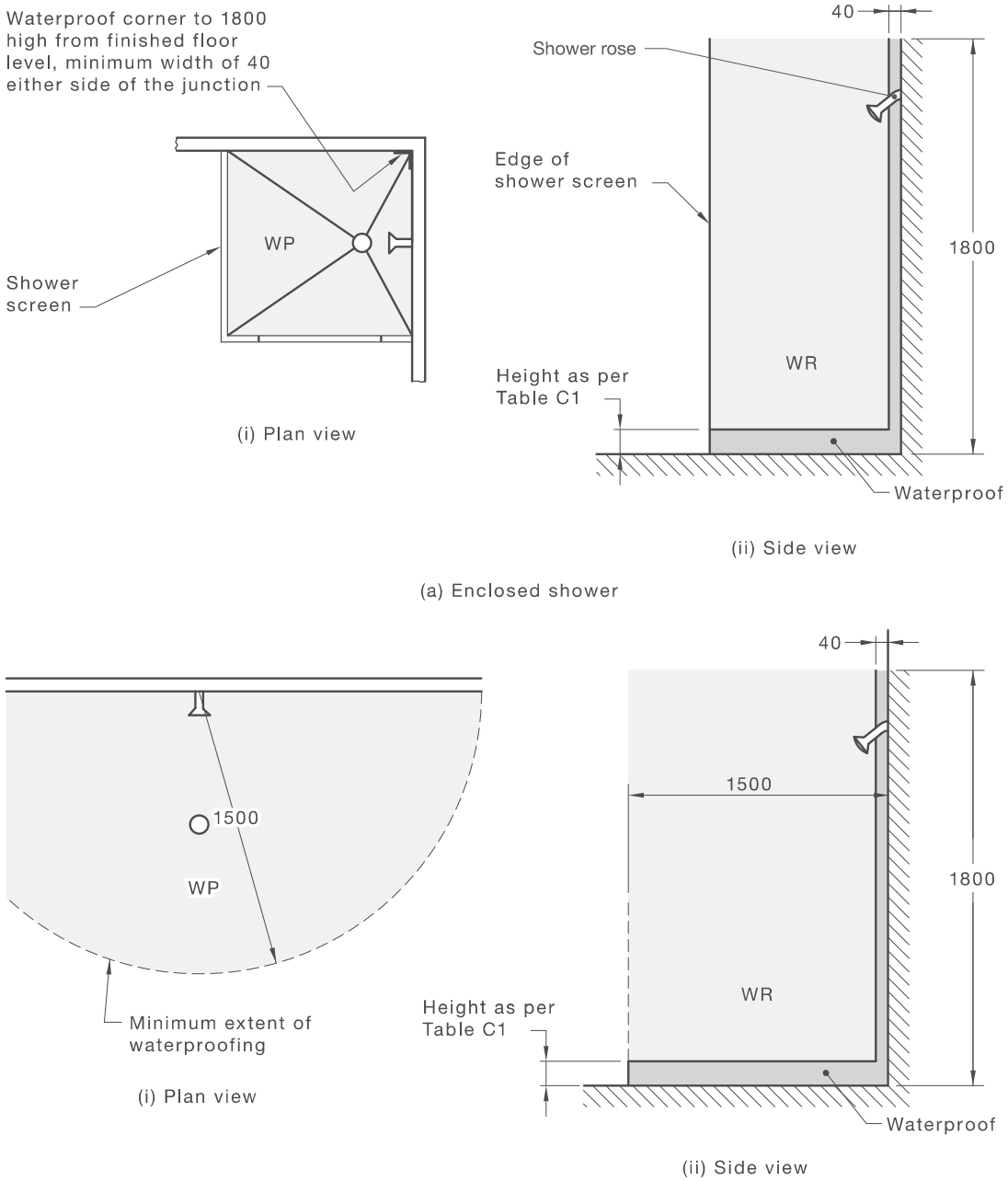


NOTE: All floor waterproofing to terminate at a waterstop.

DIMENSIONS IN MILLIMETRES

FIGURE C1 EXTENT OF THE TREATMENT FOR SHOWER AREAS—CONCRETE AND COMPRESSED FIBRE-CEMENT SHEET FLOORS

A1

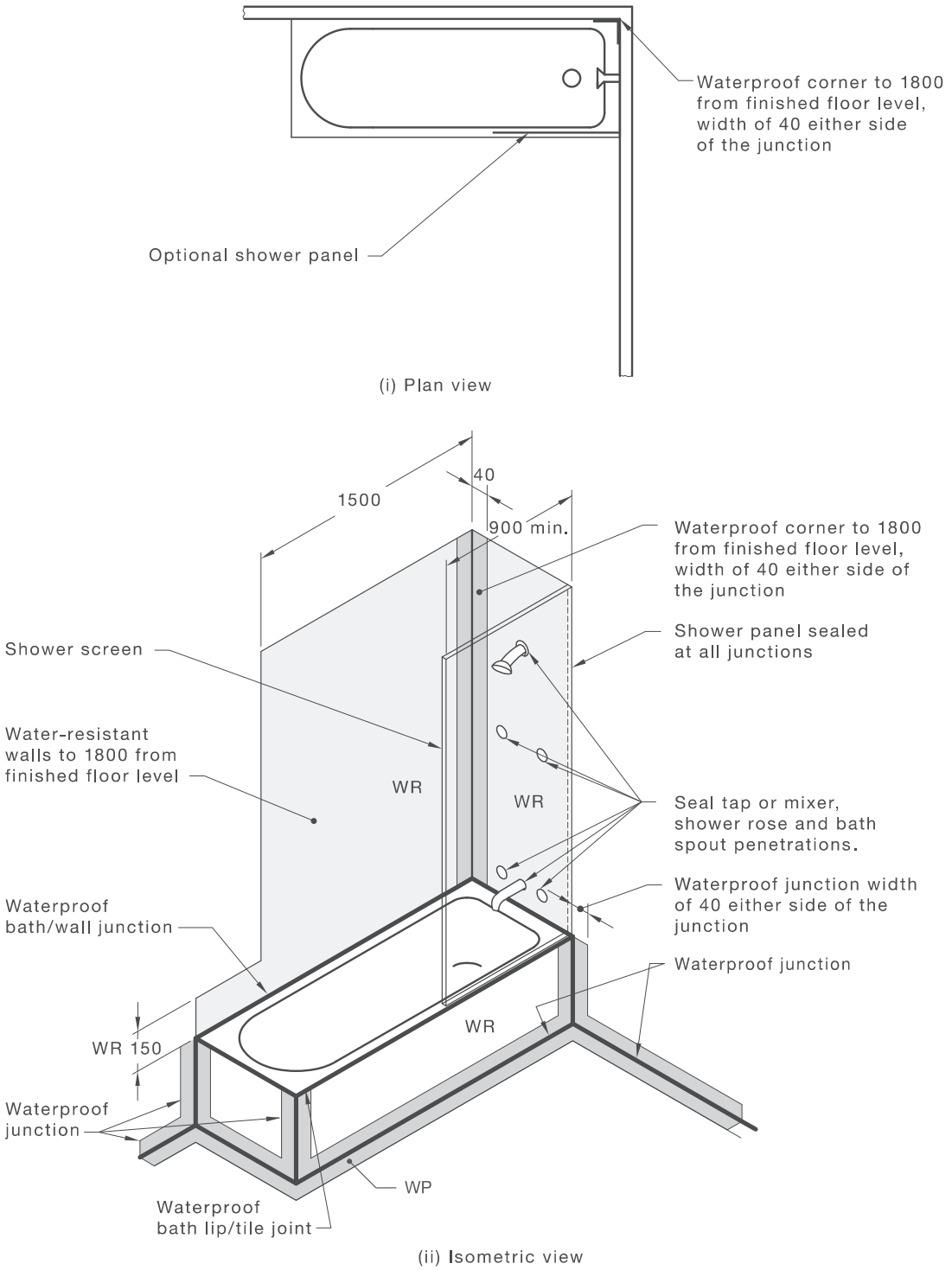


(a) 900 mm shower panel

DIMENSIONS IN MILLIMETRES

FIGURE C2 (in part) UNENCLOSED SHOWERS ABOVE BATHS—AREA PROTECTED FOR CONCRETE AND COMPRESSED FIBRE-CEMENT SHEET FLOORING

A1

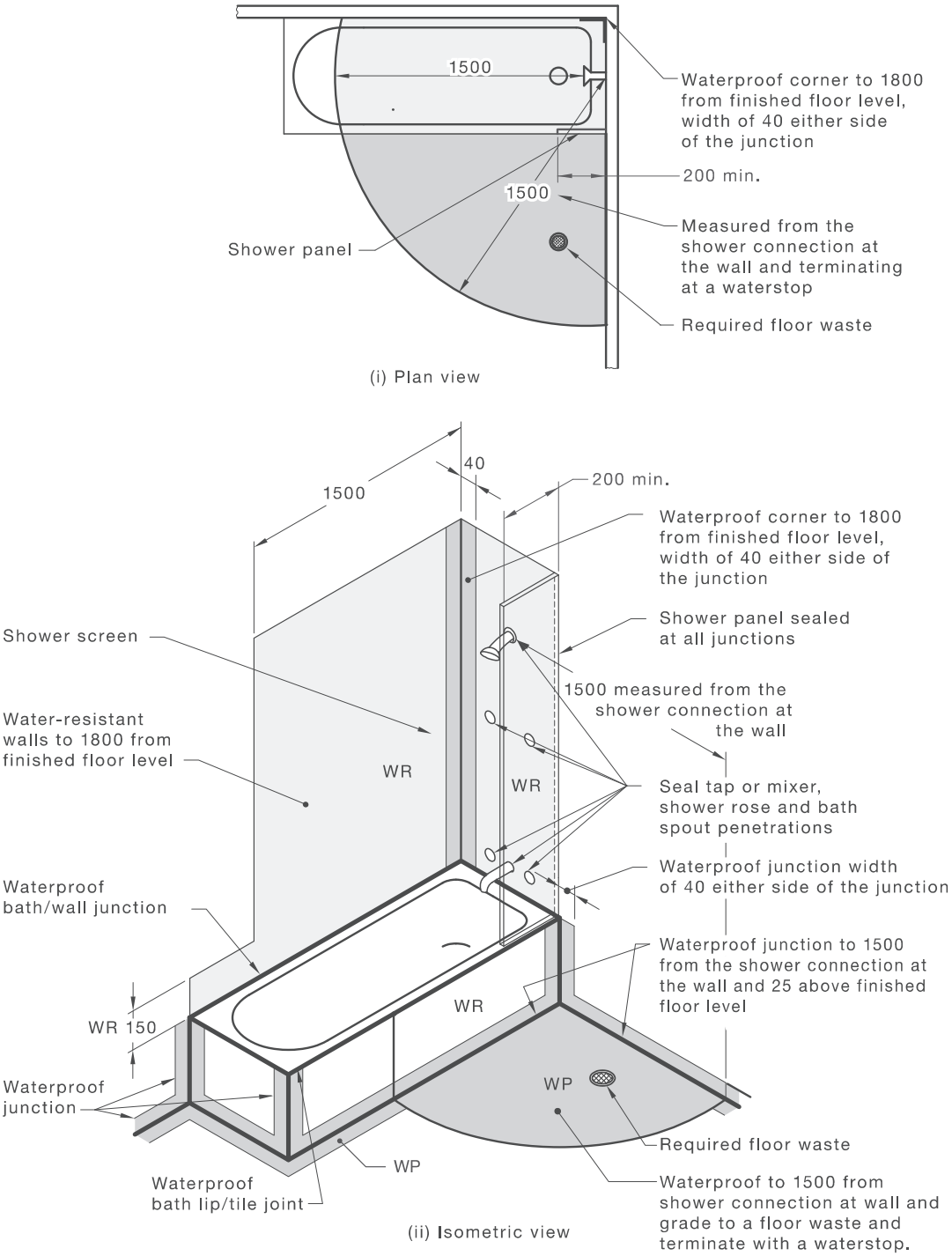


NOTE: All floor waterproofing to terminate at a waterstop.

(b) Shower panel less than 900 mm

DIMENSIONS IN MILLIMETRES

FIGURE C2 (in part) UNENCLOSED SHOWERS ABOVE BATHS—AREA PROTECTED FOR CONCRETE AND COMPRESSED FIBRE-CEMENT SHEET FLOORING

A1

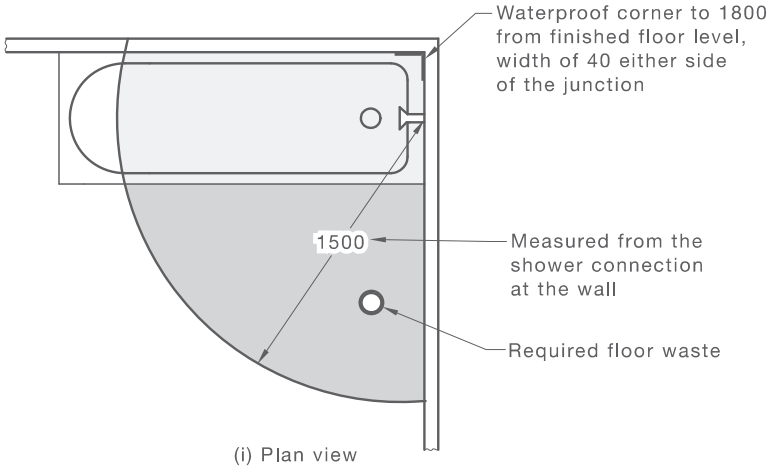


(i) Plan view

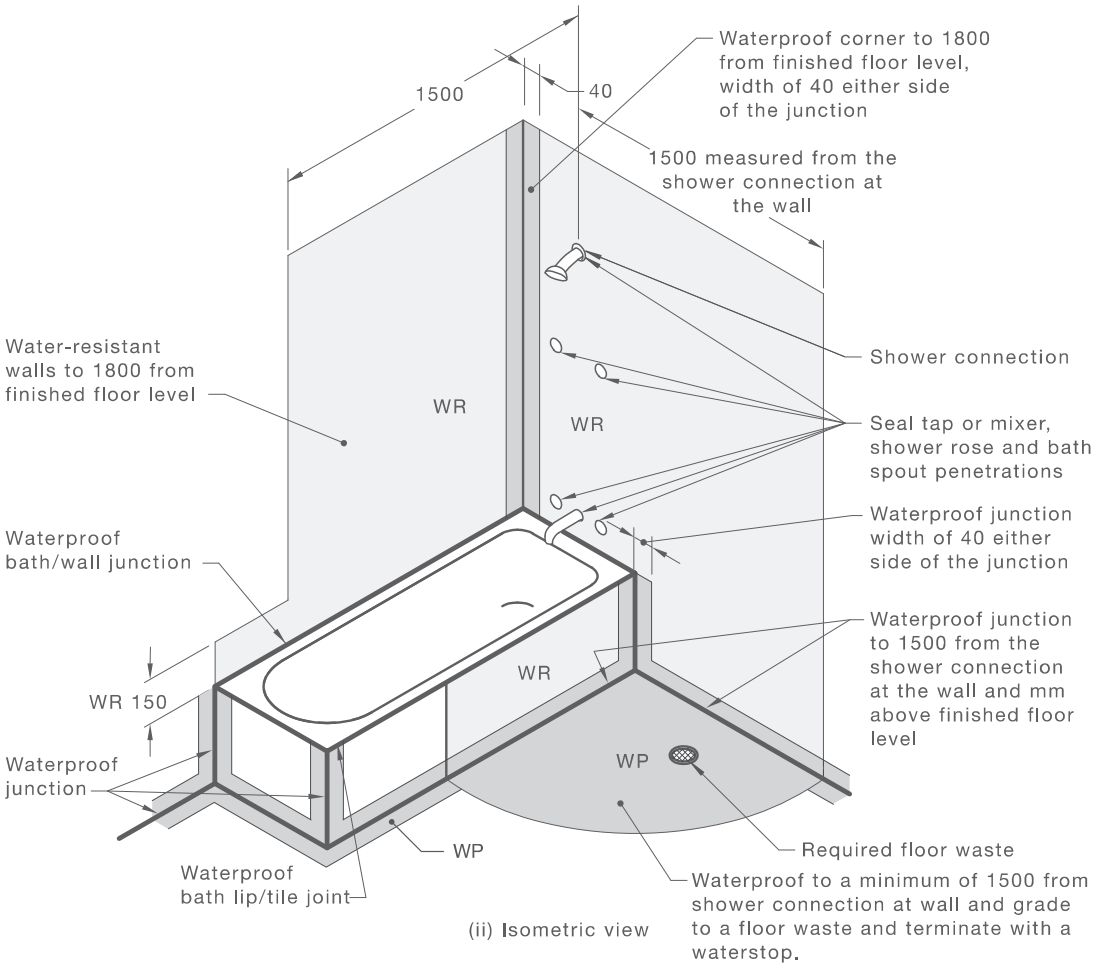


(ii) Isometric view

NOTE: All floor waterproofing to terminate at a waterstop.

(c) No shower panel

DIMENSIONS IN MILLIMETRES

FIGURE C2 (in part) UNENCLOSED SHOWERS ABOVE BATHS—AREA PROTECTED FOR CONCRETE AND COMPRESSED FIBRE-CEMENT SHEET FLOORING

A1

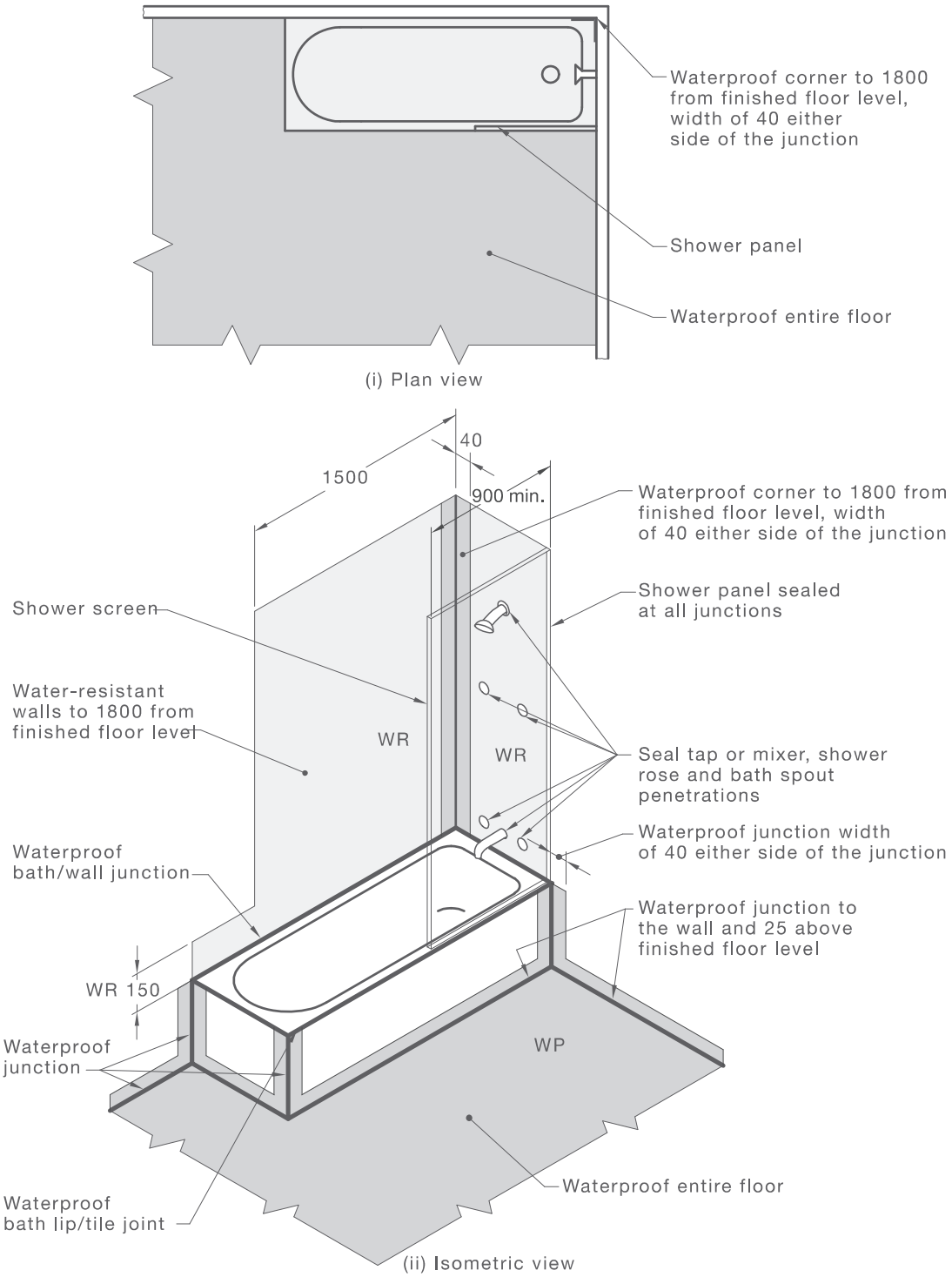


(a) 900 mm shower panel

DIMENSIONS IN MILLIMETRES

FIGURE C3 (in part) UNENCLOSED SHOWERS ABOVE BATHS—AREA PROTECTED FOR TIMBER FLOORS INCLUDING PARTICLEBOARD, PLYWOOD AND OTHER FLOOR MATERIALS

A1

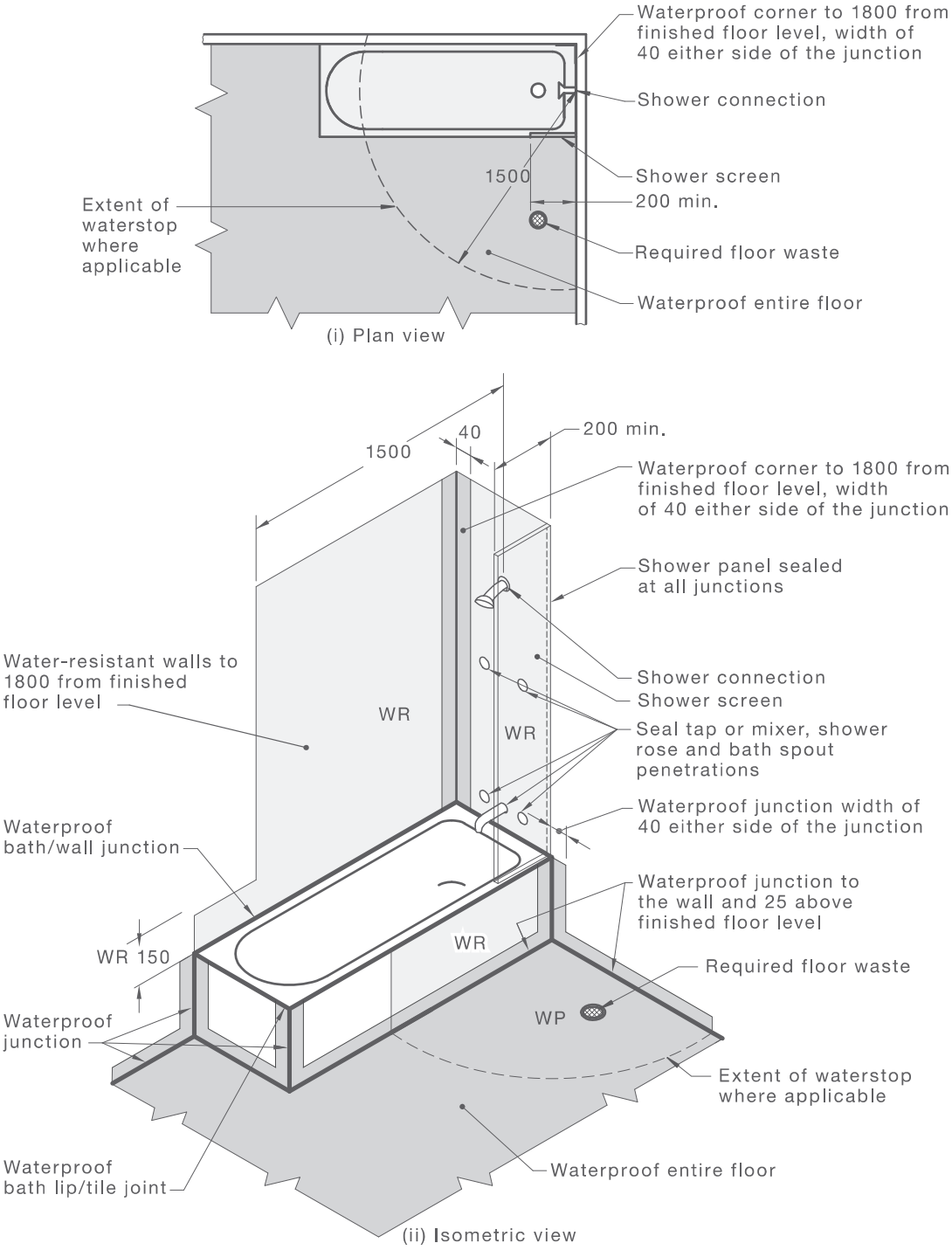


NOTE: All floor waterproofing to terminate at a waterstop.

(b) Shower panel less than 900 mm

DIMENSIONS IN MILLIMETRES

FIGURE C3 (in part) UNENCLOSED SHOWERS ABOVE BATHS—AREA PROTECTED FOR TIMBER FLOORS INCLUDING PARTICLEBOARD, PLYWOOD AND OTHER FLOOR MATERIALS

A1

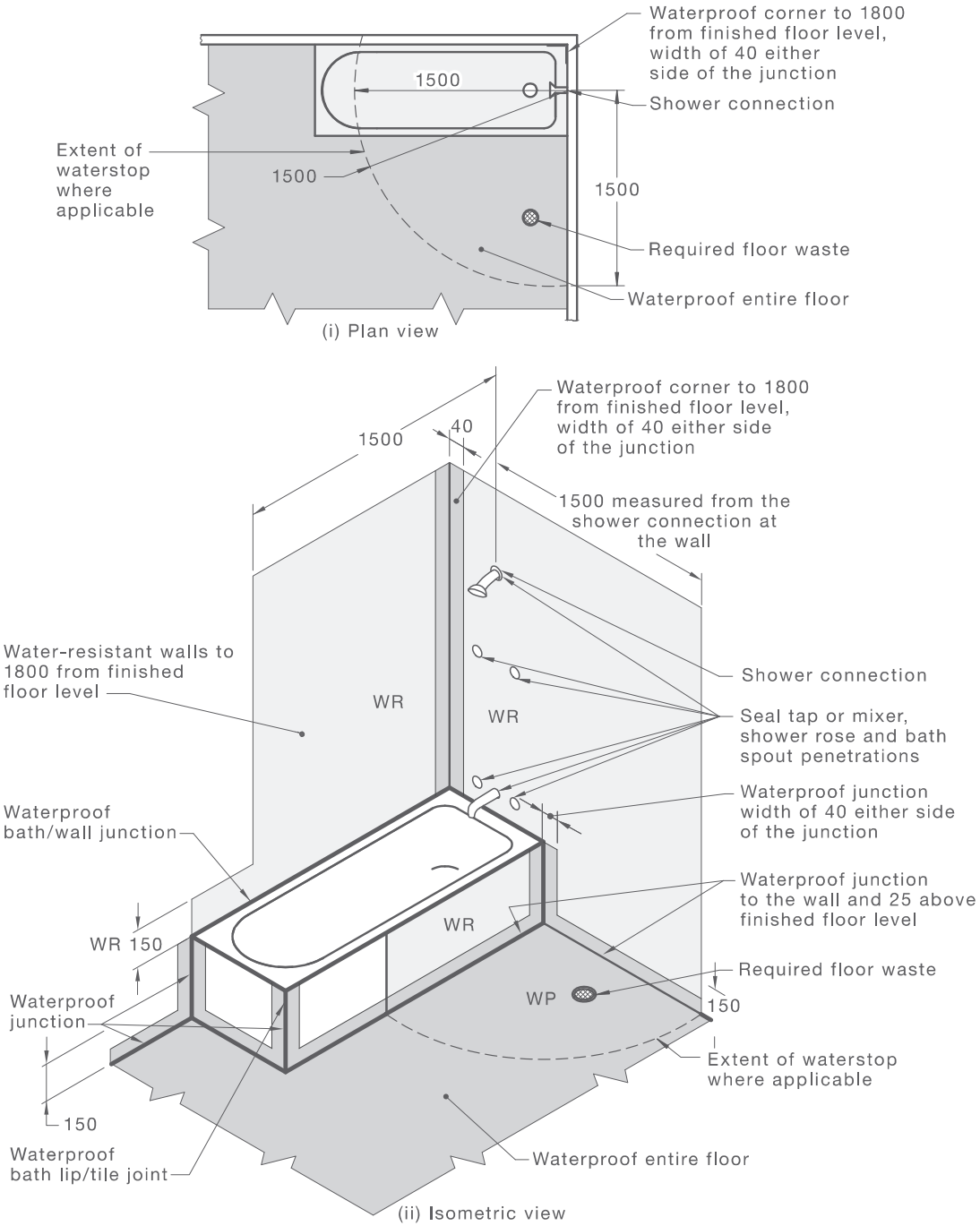


NOTE: All floor waterproofing to terminate at a waterstop.

(c) No shower panel

DIMENSIONS IN MILLIMETRES

FIGURE C3 (in part) UNENCLOSED SHOWERS ABOVE BATHS—AREA PROTECTED FOR TIMBER FLOORS INCLUDING PARTICLEBOARD, PLYWOOD AND OTHER FLOOR MATERIALS

A1

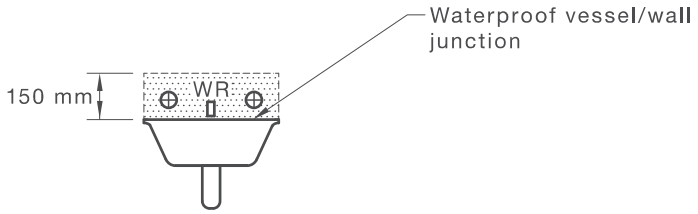


(a) Vessel abutting wall

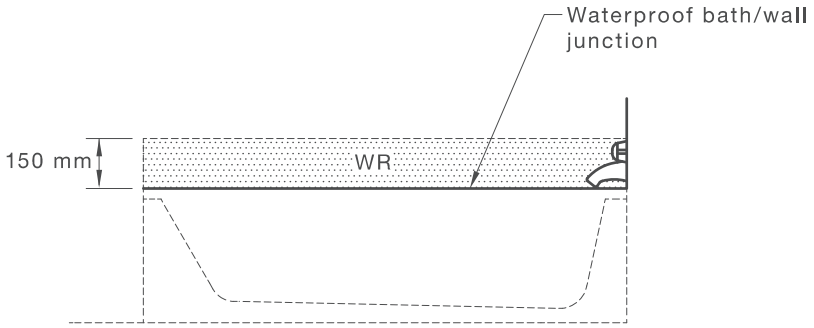


(b) Wall/bath junctions without shower

FIGURE C4 BATH AND VESSEL ABUTTING WALL—AREAS TO BE PROTECTED

A1

## TABLE C1

## WATERPROOFING AND WATER RESISTANCE REQUIREMENTS FOR BUILDING ELEMENTS IN WET AREAS

| Vessels or area where the fixture is installed | Floors and horizontal surfaces | Walls | Wall junctions and joints | Wall/floor junctions | Penetrations |
|---|---|---|---|---|---|
| **Shower area (enclosed and unenclosed)** | | | | | |
| With hob | Waterproof floor in shower area (including any hob or step-down) | (a) Waterproof all walls in shower area to a height the greater of—<br>(i) not less than 150 mm above floor substrate; or<br>(ii) not less than 25 mm above maximum retained water level; and<br>(b) Water resistant walls in shower area to not less than 1800 mm above finished floor level of the shower | Waterproof wall junctions within shower area | Waterproof wall/floor junctions within shower area | Waterproof penetrations in shower area |
| With step-down | | | | | |
| Without hob or step-down | | | | | |
| With preformed shower base | N/A | Water-resistant walls in shower area to not less than 1800 mm above finished floor level of the shower | Waterproof wall junctions within shower area | Waterproof wall/floor junctions within shower area | Waterproof penetrations in shower area |
| **Area outside shower area** | | | | | |
| For concrete and compressed fibre-cement sheet flooring | Water-resistant floor of the room | N/A | N/A | Waterproof wall/floor junctions | N/A |
| For timber floors, including particleboard, plywood and other timber-based flooring materials | Waterproof floor of the room | | | | |

(*continued*)

A1

**TABLE C1** (*continued*)

| Vessels or area where the fixture is installed | Floors and horizontal surfaces | Walls | Wall junctions and joints | Wall/floor junctions | Penetrations |
|---|---|---|---|---|---|
| **Area adjacent to baths and spas (see Note 1)** | | | | | |
| For concrete and compressed fibre-cement sheet flooring | Water-resistant floor of the room | (a) Water-resistant to a height of not less than 150 mm above the vessel, for the extent of the vessel, where the vessel is within 75 mm of a wall<br>(b) Water-resistant all exposed surfaces below vessel lip | Water-resistant junctions within 150 mm above a vessel for the extent of the vessel | Water-resistant wall/floor junctions for the extent of the vessel | Waterproof tap and spout penetrations where they occur in horizontal surfaces |
| For timber floors, including particleboard, plywood and other timber-based flooring materials | Waterproof floor of the room | | | | |
| Inserted baths and spas | (a) Waterproof shelf area, incorporating waterstop under the bath lip<br>(b) No requirement under bath | (a) Waterproof to not less than 150 mm above lip of bath or spa<br>*and*<br>(b) No requirement under bath | (a) Waterproof junctions within 150 mm above bath or spa<br>and<br>(b) No requirement under bath | N/A | Waterproof tap and spout penetrations where they occur in horiziontal surfaces |
| Walls adjoining other vessel (e.g. sink, basin or laundry tub) | N/A | Water-resistant to a height of not less than 150 mm above the vessel, for the extent of the vessel, where the vessel is within 75 mm of a wall | Waterproof wall junctions where a vessel is fixed to a wall | N/A | Waterproof tap and spout penetrations where they occur in surfaces required to be waterproof or water resistant |
| Laundries and WCs | Water-resistant floor of the room | N/A | N/A | Waterproof wall/floor junctions | Waterproof penetrations where they occur in surfaces required to be waterproof |

(*continued*)

A1

**TABLE C1** (*continued*)

| Vessels or area where the fixture is installed | Floors and horizontal surfaces | Walls | Wall junctions and joints | Wall/floor junctions | Penetrations |
|---|---|---|---|---|---|
| Bathrooms and laundries required to provide a floor waste | Waterproof floor of the room | N/A | N/A | Waterproof wall/floor junctions | Waterproof penetrations where they occur through the floor |

LEGEND:
N/A = not applicable

NOTES:

1 Where a shower is above a bath or spa, use requirements for shower.

2 This Table has been reproduced from the National Construction Code (NCC), (BCA, Volume One – 2012, Table F1.7), with the permission of the Australian Building Codes Board (ABCB).

3 Users of the Standard should check that the NCC Table has not changed before using its reproduction.

4 Where a penetration passes through waterproof or water-resistant construction, the penetration should be made waterproof.

```
ERROR: undefined
OFFENDING COMMAND: eexec

STACK:

/quit
-dictionary-
-mark-
```

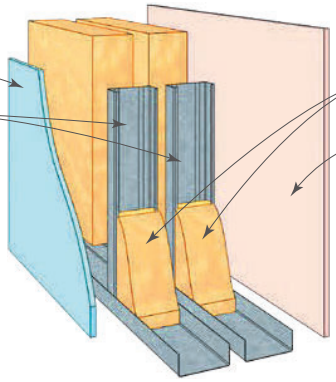


NOTE: * ACR = Axial Capacity Reduction. Acoustic performance valid for studs with BMT stated in table.

| SYSTEM SPECIFICATION<br>Refer to GYP548 Gyprock Commercial Installation Guide for further information | | | ACOUSTIC OPINION: PKA Predictor V16<br>Discontinuous Construction | | | | |
|---|---|---|---|---|---|---|---|
| | | | CAVITY WIDTH mm | 148 | 200 | 250 | 300 |
| | | | STUD DEPTH/BMT mm | 64/Any | | | |
| FRL<br>Report/Opinion | SYSTEM Nº | WALL LININGS | CAVITY INFILL<br>(Refer to TABLE B13) | $R_w$ / $R_w$+$C_{tr}$ | | | |
| – /90/90<br>30/30/30<br>(from both sides)<br>FAR 2357 | CSR 1382 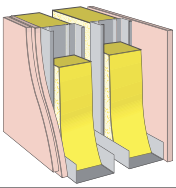 | SIDE ONE<br>• 2 x 13mm Gyprock Fyrchek Plasterboard.<br>SIDE TWO<br>• 1 x 13mm Gyprock Fyrchek Plasterboard. | (a) Nil | 47/41 | 48/42 | 49/43 | 50/44 |
| | | | (b) 2 x 50 GW Acoustigard 11kg | 60/**51** | 60/**51** | 61/**52** | 62/**53** |
| | | | (c) 2 x 75 GW Acoustigard 11kg | 62/**53** | 63/**54** | 64/**55** | 64/**55** |
| | | | (d) 2 x MSB3 Polyester | 57/48 | 57/49 | 58/**50** | 58/**50** |
| | | | (e) 2 x 60 Soundscreen 1.7 | 63/**53** | 64/**54** | 64/**54** | 65/**55** |
| | | | Wall Thickness mm | 187 | 239 | 289 | 339 |
| – /90/90<br>30/30/30<br>(from both sides)<br>FAR 2357 | CSR 1383 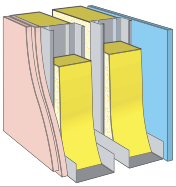 | SIDE ONE<br>• 2 x 13mm Gyprock Fyrchek Plasterboard.<br>SIDE TWO<br>• 1 x 13mm Gyprock Fyrchek MR Plasterboard. | (a) Nil | 47/41 | 48/42 | 49/43 | 50/44 |
| | | | (b) 2 x 50 GW Acoustigard 11kg | 60/**51** | 60/**51** | 61/**52** | 62/**53** |
| | | | (c) 2 x 75 GW Acoustigard 11kg | 62/**53** | 63/**54** | 64/**55** | 64/**55** |
| | | | (d) 2 x MSB3 Polyester | 56/48 | 57/49 | 58/**50** | 58/**50** |
| | | | (e) 2 x 60 Soundscreen 1.7 | 63/**53** | 64/**54** | 64/**54** | 65/**55** |
| | | | Wall Thickness mm | 187 | 239 | 289 | 339 |
| – /90/90<br>30/30/30<br>(from both sides)<br>FAR 2357 | CSR 1384 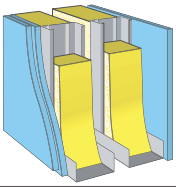 | SIDE ONE<br>• 2 x 13mm Gyprock Fyrchek MR Plasterboard.<br>SIDE TWO<br>• 1 x 13mm Gyprock Fyrchek MR Plasterboard. | (a) Nil | 47/41 | 48/42 | 49/43 | 50/44 |
| | | | (b) 2 x 50 GW Acoustigard 11kg | 60/**51** | 60/**51** | 61/**52** | 62/**53** |
| | | | (c) 2 x 75 GW Acoustigard 11kg | 62/**53** | 63/**54** | 64/**55** | 64/**55** |
| | | | (d) 2 x MSB3 Polyester | 56/48 | 57/49 | 58/**50** | 58/**50** |
| | | | (e) 2 x 60 Soundscreen 1.7 | 63/**53** | 64/**54** | 64/**54** | 65/**55** |
| | | | Wall Thickness mm | 187 | 239 | 289 | 339 |
| – /90/90<br>60/60/60<br>90/90/90*<br>(from both sides)<br>*ACR 15%<br>FAR 2357 | CSR 1385 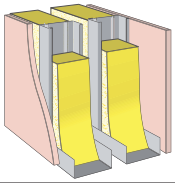 | BOTH SIDES<br>• 1 x 16mm Gyprock Fyrchek Plasterboard. | (a) Nil | 42/36 | 43/37 | 44/38 | 45/39 |
| | | | (b) 2 x 50 GW Acoustigard 11kg | 56/47 | 56/47 | 57/48 | 58/49 |
| | | | (c) 2 x 75 GW Acoustigard 14kg | 59/**50** | 60/**51** | 61/**52** | 61/**52** |
| | | | (d) 2 x MSB3 Polyester | 52/44 | 53/45 | 54/46 | 54/46 |
| | | | (e) 2 x 60 Soundscreen 1.7 | 59/49 | 60/**50** | 60/**50** | 61/**51** |
| | | | Wall Thickness mm | 180 | 232 | 282 | 332 |
| – /90/90<br>60/60/60<br>90/90/90*<br>(from both sides)<br>*ACR 15%<br>FAR 2357 | CSR 1386 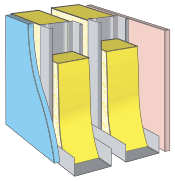 | SIDE ONE<br>• 1 x 16mm Gyprock Fyrchek MR Plasterboard.<br>SIDE TWO<br>• 1 x 16mm Gyprock Fyrchek Plasterboard. | (a) Nil | 43/37 | 44/38 | 45/39 | 46/40 |
| | | | (b) 2 x 50 GW Acoustigard 11kg | 57/48 | 57/48 | 58/49 | 59/**50** |
| | | | (c) 2 x 75 GW Acoustigard 11kg | 59/**50** | 60/**51** | 61/**52** | 61/**52** |
| | | | (d) 2 x MSB3 Polyester | 53/45 | 54/46 | 55/47 | 55/47 |
| | | | (e) 2 x 60 Soundscreen 1.7 | 60/**50** | 61/**51** | 61/**51** | 62/**52** |
| | | | Wall Thickness mm | 180 | 232 | 282 | 332 |
| – /90/90<br>60/60/60<br>90/90/90*<br>(from both sides)<br>*ACR 15%<br>FAR 2357 | CSR 1387 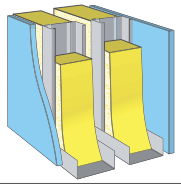 | BOTH SIDES<br>• 1 x 16mm Gyprock Fyrchek MR Plasterboard. | (a) Nil | 44/38 | 45/39 | 46/40 | 47/41 |
| | | | (b) 2 x 50 GW Acoustigard 11kg | 58/49 | 58/49 | 59/**50** | 60/**51** |
| | | | (c) 2 x 75 GW Acoustigard 11kg | 60/**51** | 61/**52** | 62/**53** | 62/**53** |
| | | | (d) 2 x MSB3 Polyester | 54/46 | 55/47 | 56/48 | 56/48 |
| | | | (e) 2 x 60 Soundscreen 1.7 | 61/**51** | 62/**52** | 62/**52** | 63/**53** |
| | | | Wall Thickness mm | 180 | 232 | 282 | 332 |

## Hebel PowerPanel System for Facades - Hidden Slab Edge

This is an alternative system to edge beam detailing where the panels are positioned in front of the slab edge. Locating the panels proud of the slab edge produces a single rebated external line at slab level, and provides a more flexible slab edge tolerance.

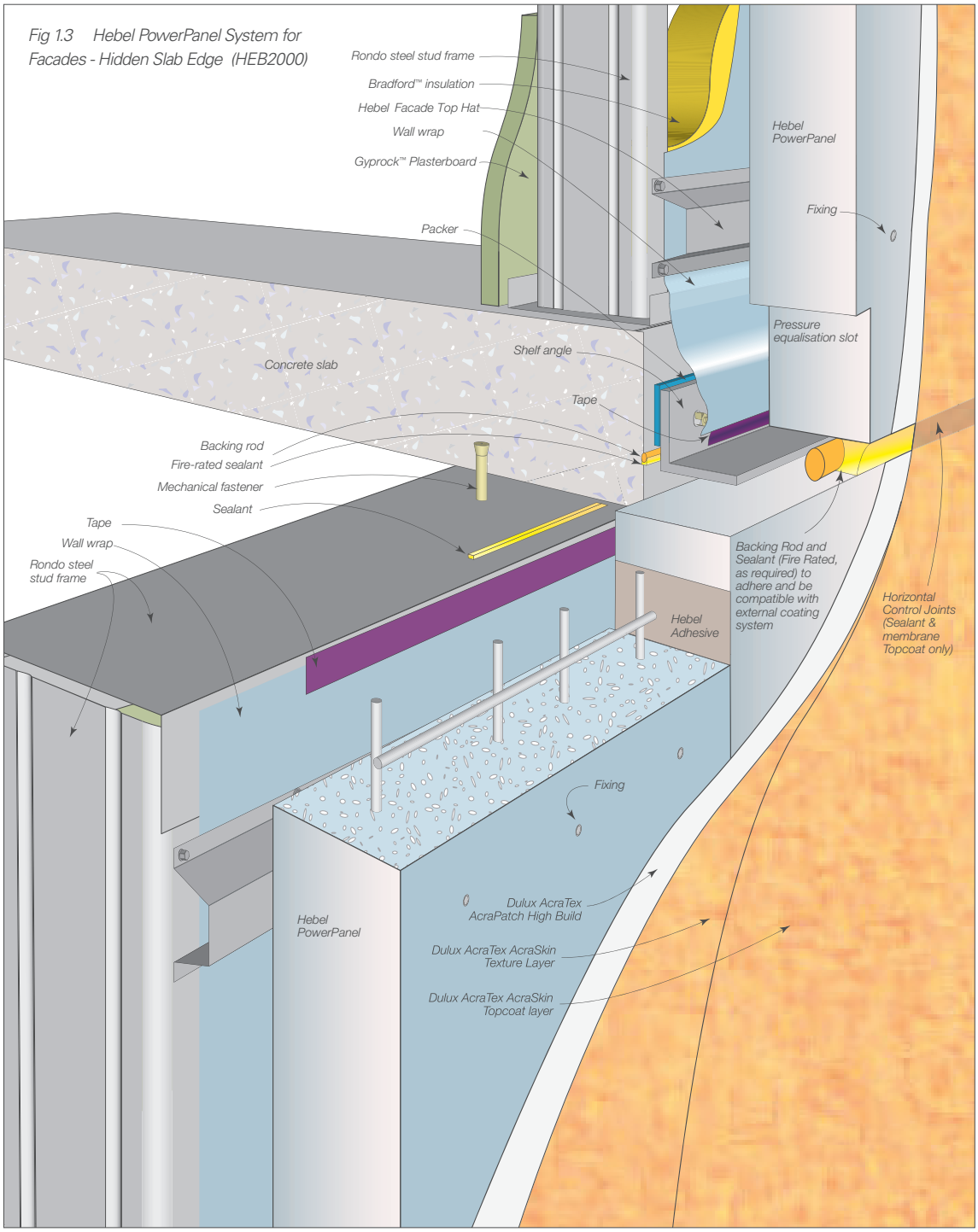


*Fig 1.3 Hebel PowerPanel System for Facades - Hidden Slab Edge (HEB2000)*

*IMPORTANT NOTE: Always refer to current details available in the AutoCAD and pdf versions on the website: www.hebel.com.au*

## 2.3 Design for weather tightness

The primary goal in facade design is the provision of a building solution that manages the environmental conditions that the facade is subjected to during its design life. Of the various environmental conditions, the prevention of water ingress is critical.

The Hebel PowerPanel System for Facades is a high quality rain screen, and adopts the concept of pressure equalisation to provide a system that eliminates water being drawn through the rain screen due to a pressure differential.

When wind pressures act on the external surface of the facade, a pressure difference is generated between the external side and cavity space side of the Hebel PowerPanel cladding. The combination of a pressure differential; a penetration in the external coating and sealing system; and water, can result in water being drawn through the penetration and into the cavity.

The principal of pressure equalisation is, where wind pressure acting on the external surface of the facade can gain access to the cavity side, thus allowing the pressures on both sides of the cladding to become similar.

The elimination of a pressure differential significantly reduces the process of water being drawn through a penetration in the external coating/sealing system and cladding.

Additionally, the slots provided for pressure equalisation allow for drainage of water from the cavity if ingress occurs.

A compulsory part of the Hebel PowerPanel System for Facades is the wall wrap, which is installed on the external side of the stud frame to seal the cavity space.

*Fig 2.5 Hidden Slab Edge Detail (HEB2000)*

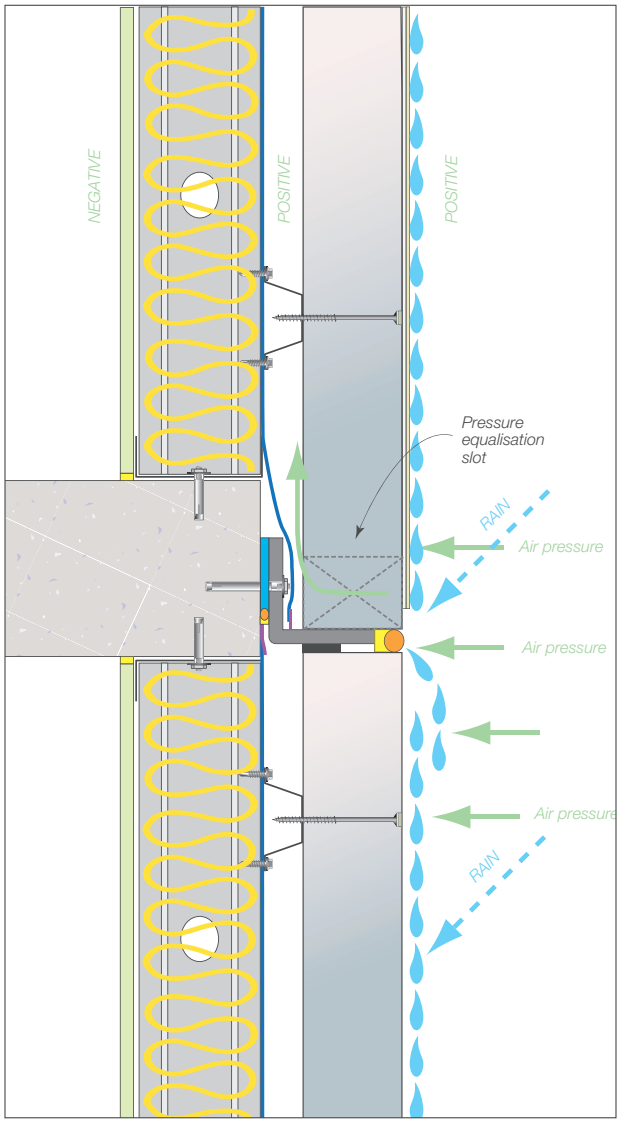


*Fig 2.6 Exposed Slab Edge Detail (HEB2001)*

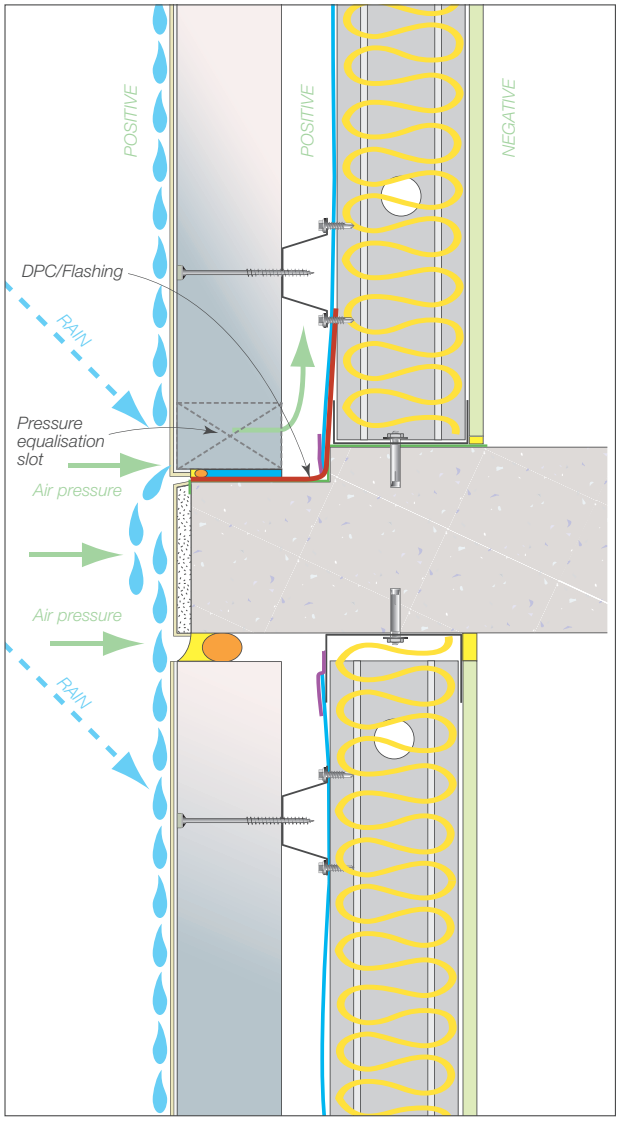

# 3.3 Construction details and drawings – General

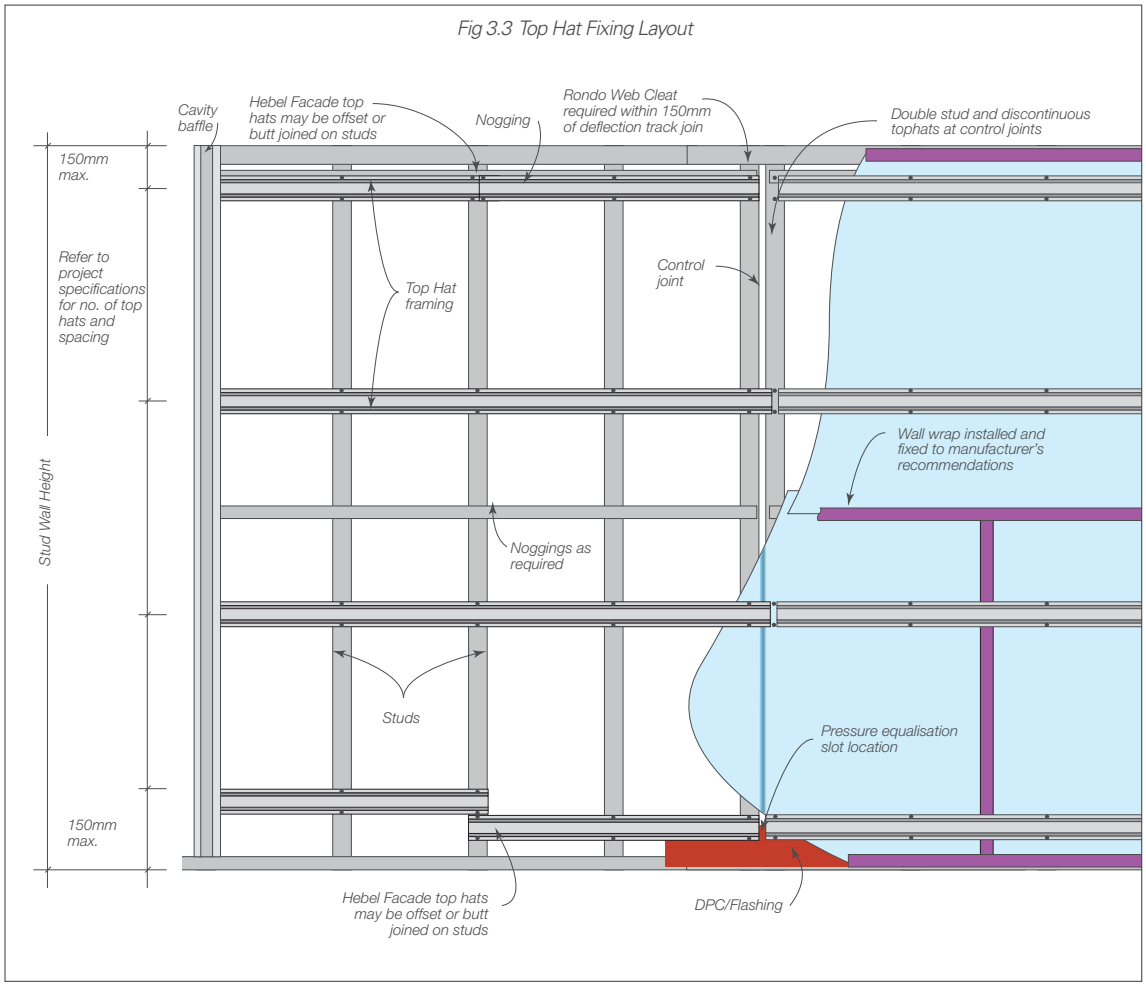


*Fig 3.3 Top Hat Fixing Layout*

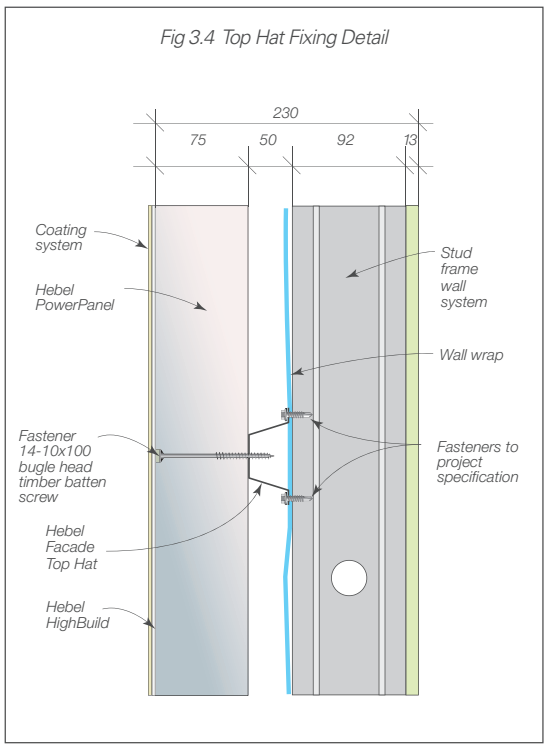


*Fig 3.4 Top Hat Fixing Detail*

*Fig 3.5 Hebel PowerPanel Fixing Detail (Visible Edge Beam shown)*

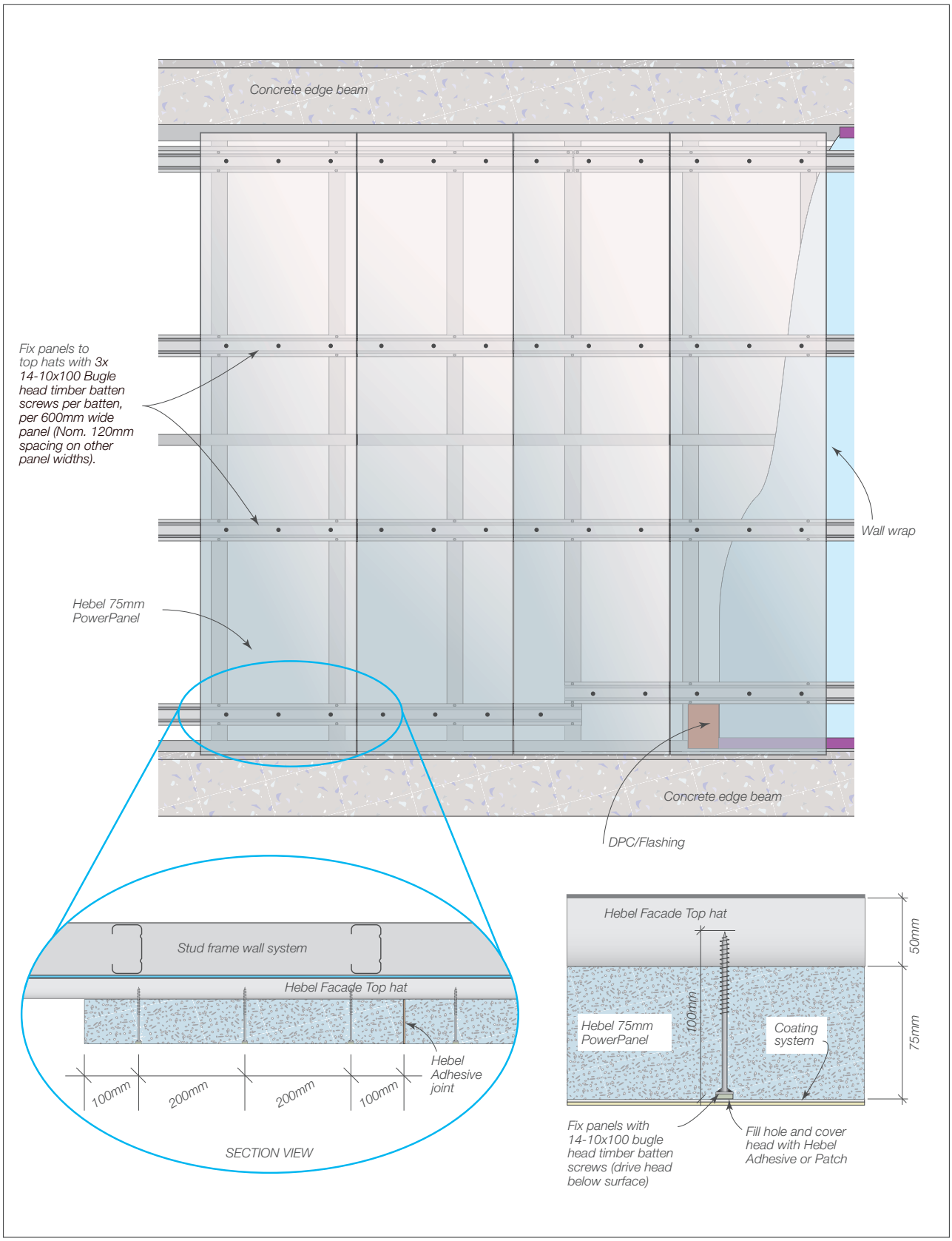

*Fig 3.6 Window Opening Detail (Visible Edge Beam shown)*

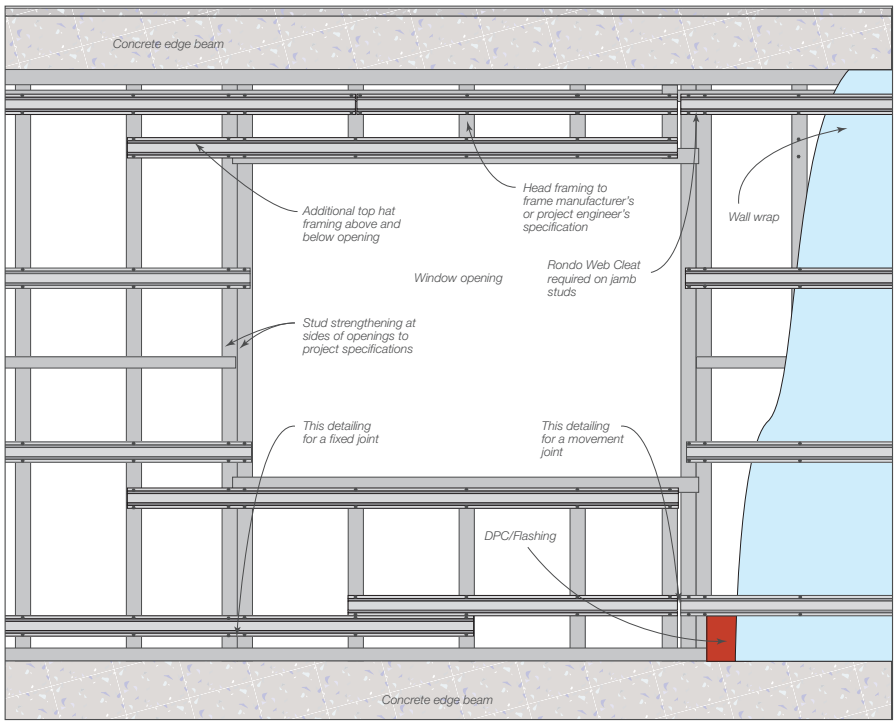


*Fig 3.7 Window Opening Detail (Visible Edge Beam shown)*

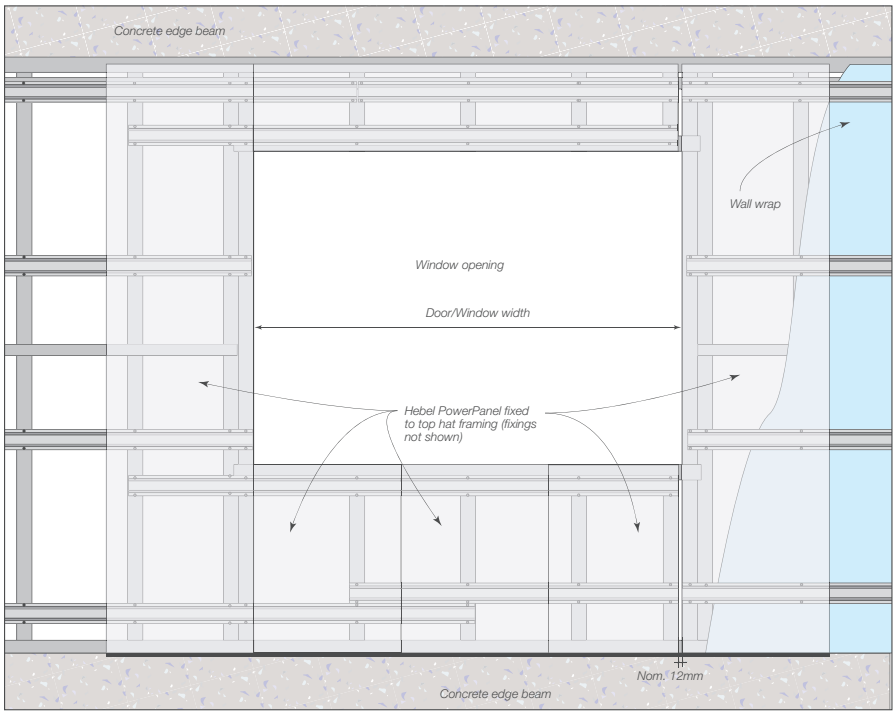


*NOTE: For major openings in the Hebel PowerPanel System for Facades, CSR Hebel recommends locating movement joints adjacent to the opening.*

*Control joints at door/window openings:*

- *Door/windows width ≤ 2400mm – a control joint is to be provided to one side of the opening (minimum must be provided)*
- *Door/windows width > 2400mm – control joints to both sides of the opening must be provided*

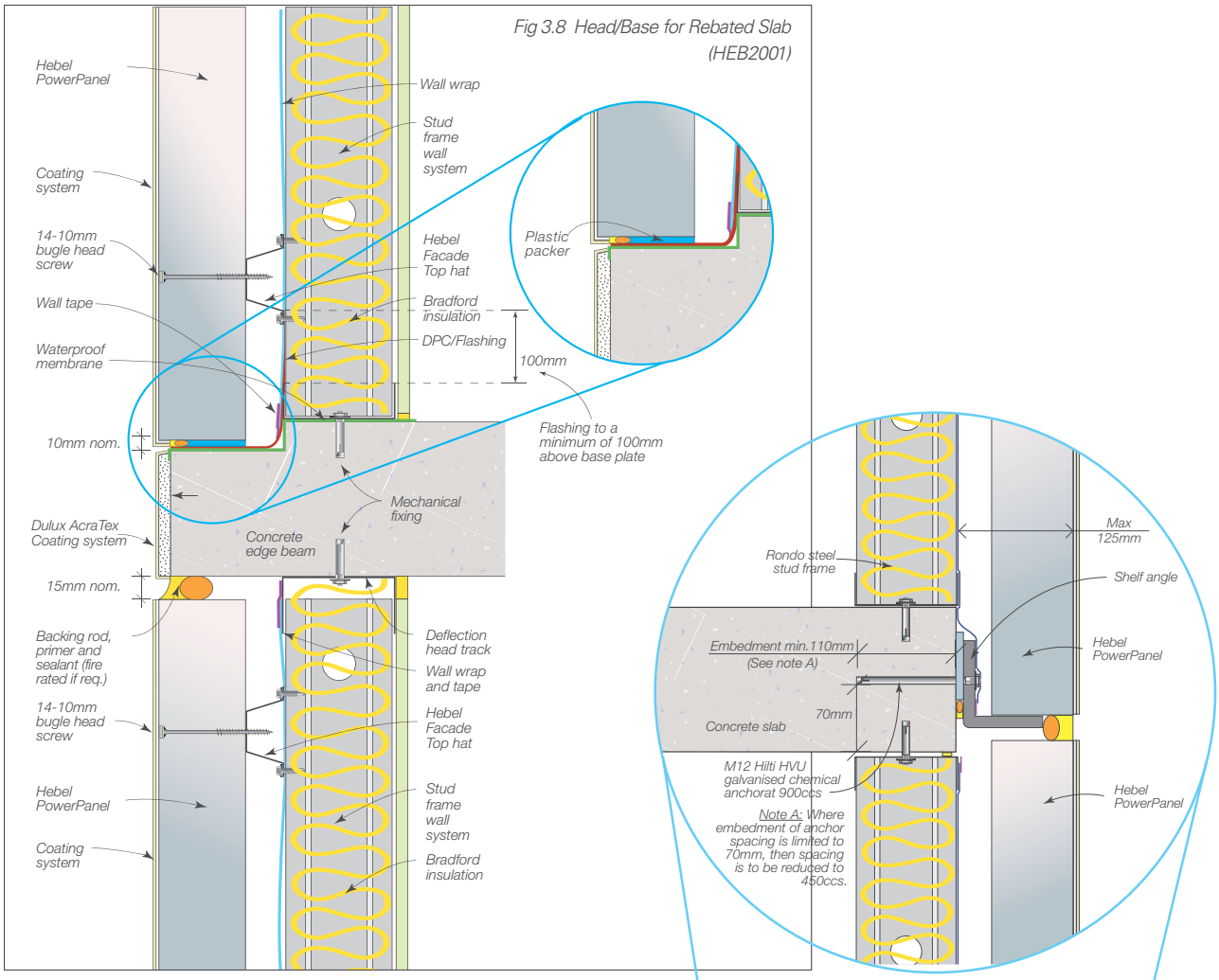


Fig 3.8 Head/Base for Rebated Slab (HEB2001)

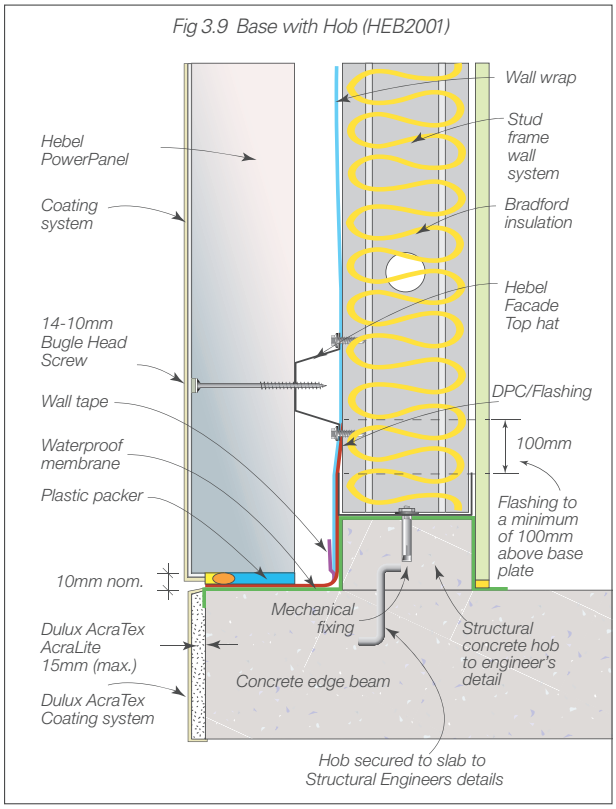


Fig 3.9 Base with Hob (HEB2001)

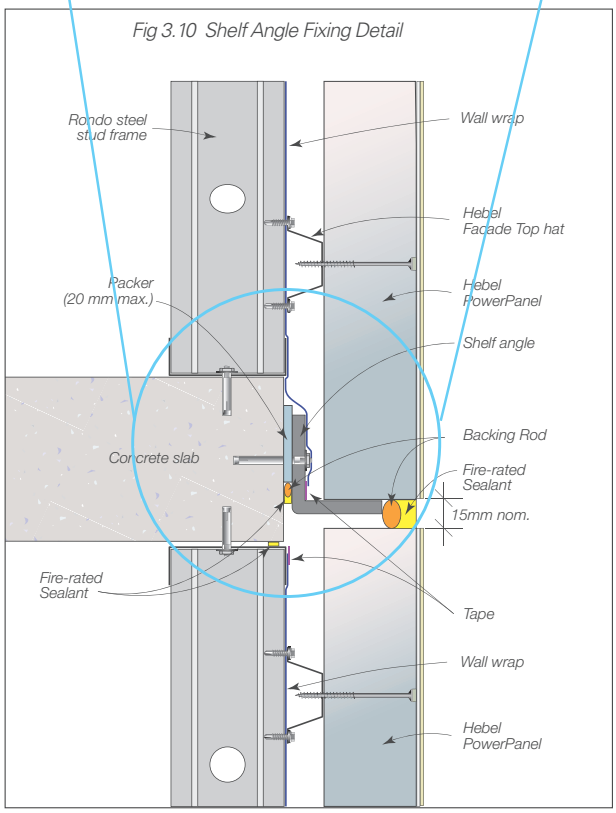


Fig 3.10 Shelf Angle Fixing Detail

Fig 3.11 Control Joint

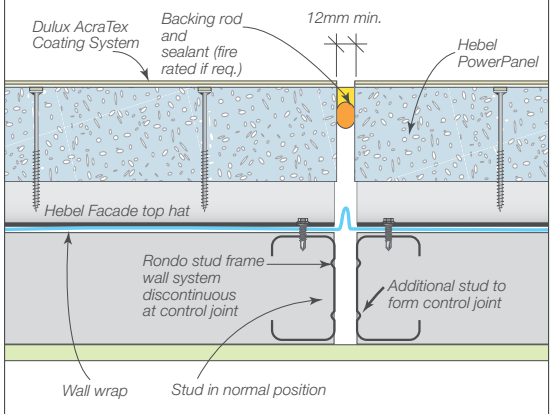


Note: Control Joints in internal plasterboard linings to be installed in accordance with plasterboad manufacturers details.

Fig 3.12 Junction with Concrete Column

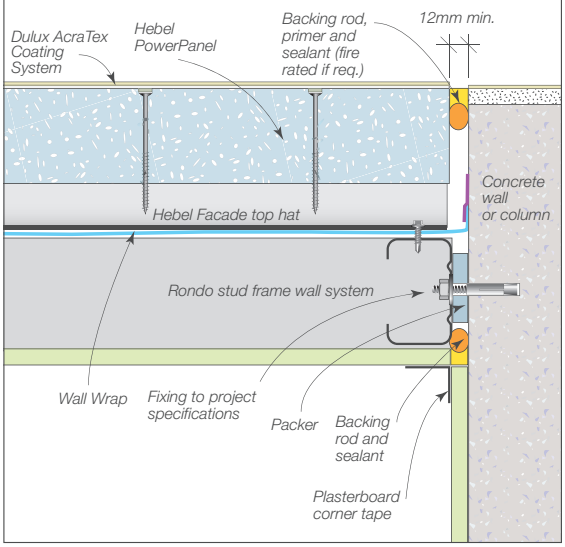


Fig 3.13 External Corner

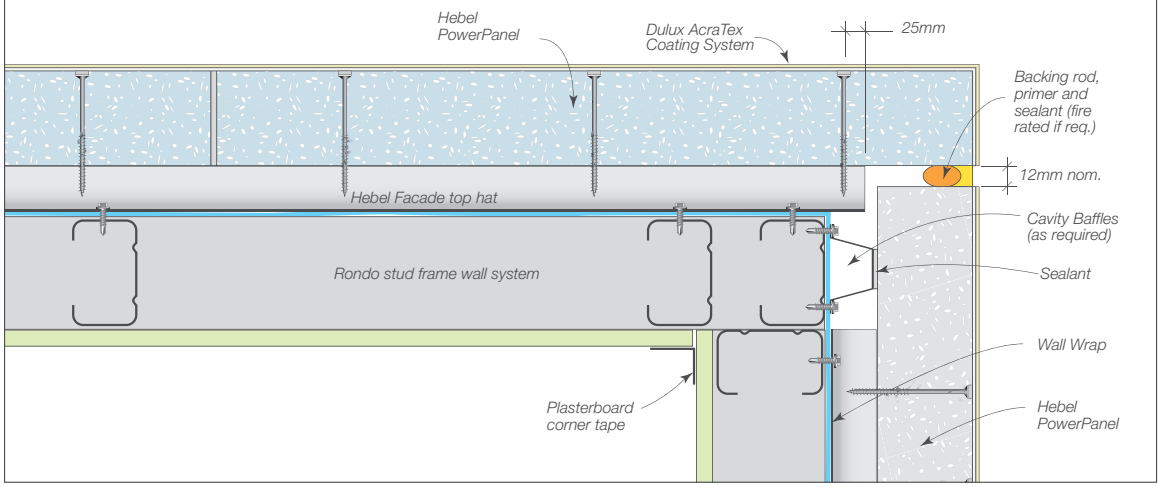


Fig 3.14 Angled Corner

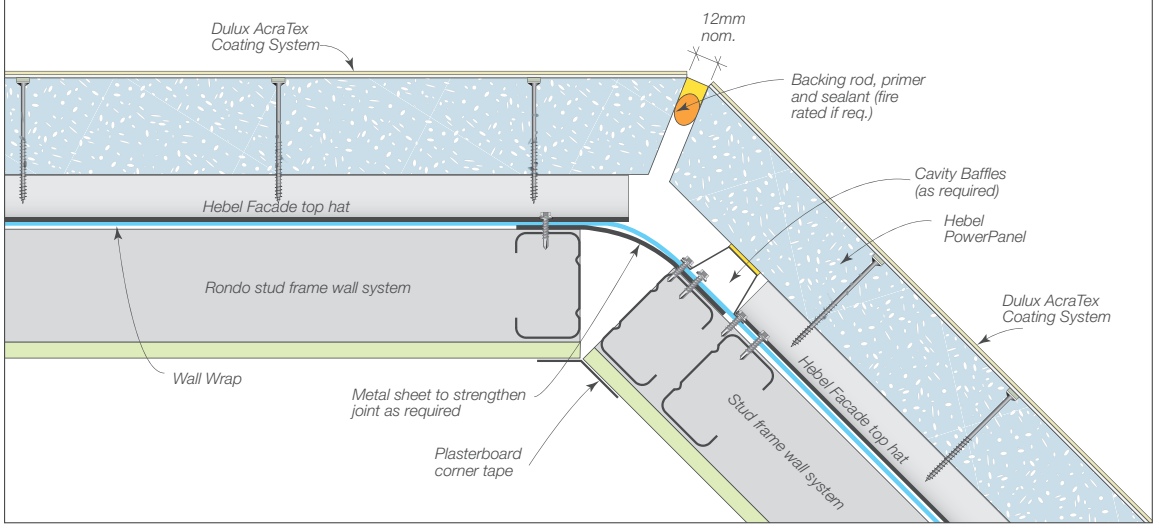

**IMPORTANT NOTES:**

- Window/door frames are not to vent into the wall cavity. Provide air seal as required.
- Weather bar and brace flashing are integral to performance and must always be provided as described.
- Perimeter of openings to provide air-seal to plasterboard. Cover/seal holes in studs, seal all corner joints and wrap wall wrap and flashing tape around inside to face of frame.
- Window frame connections are to be in accordance with the window frame manufacturer's specifications.
- Windows are to be structurally supported by the stud frame wall system. No loads are to be transferred to the Hebel PowerPanel cladding.
- Provide support to studs/deflection tracks using Rondo Web Cleat P/N SWC3 as required and as per Rondo Technical Bulletin 30.
- Sealant type and configuration are to be in accordance with the window frame manufacturer's specifications and compatible with the substrates (waterproofing membranes or other sealants). Always prime surfaces to be sealed.

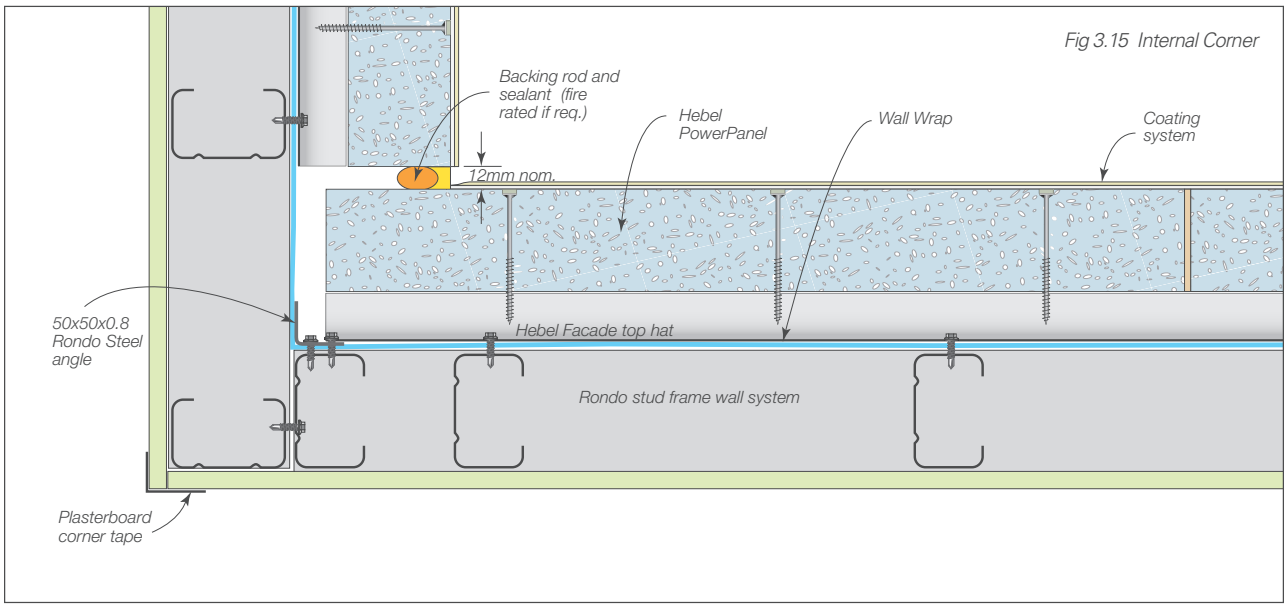


*Fig 3.15 Internal Corner*

*Fig 3.16 Window Head*

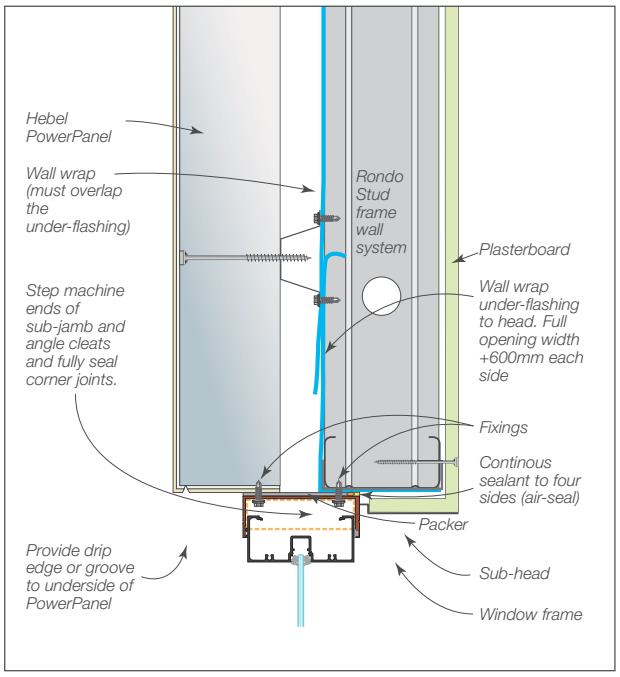


*Fig 3.17 Window Sill*

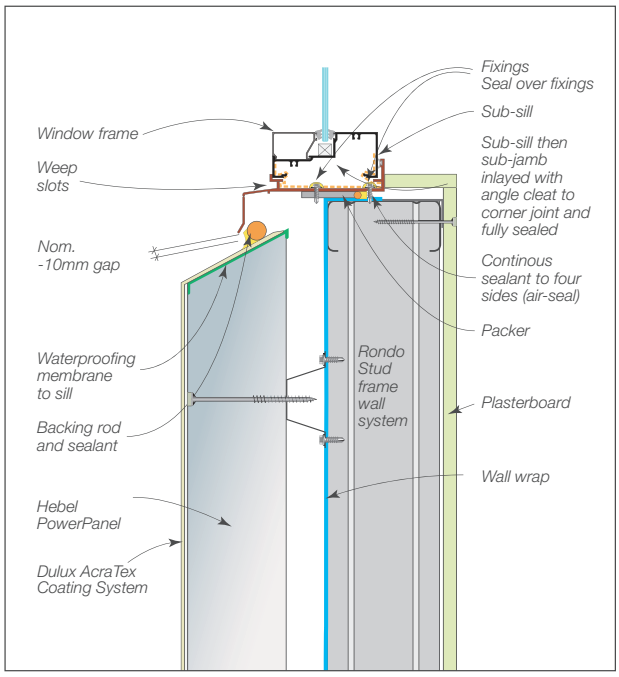

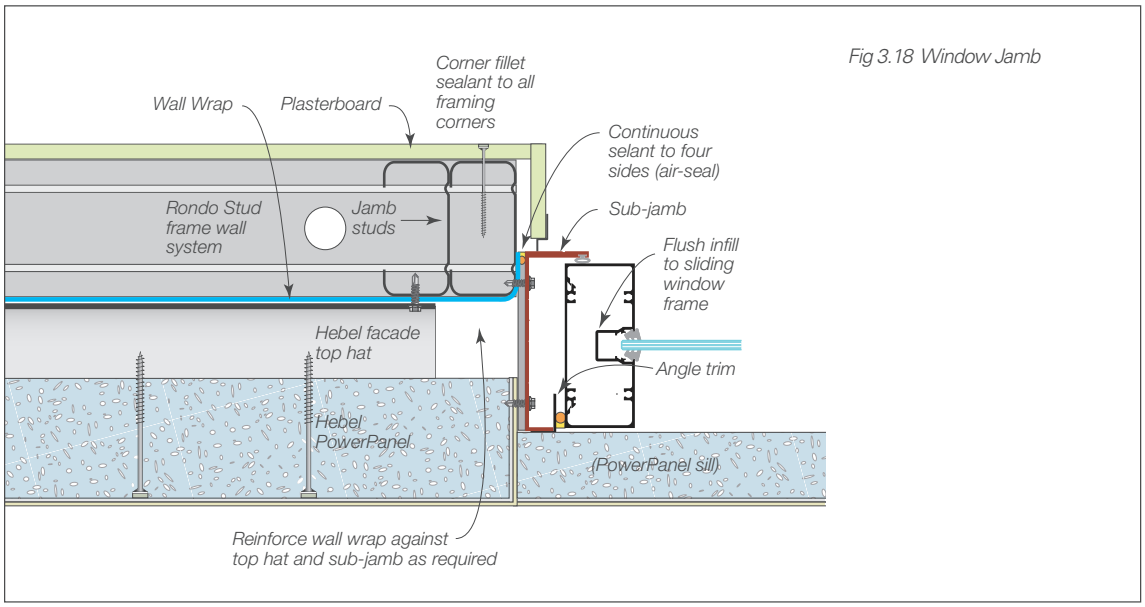


Fig 3.18 Window Jamb

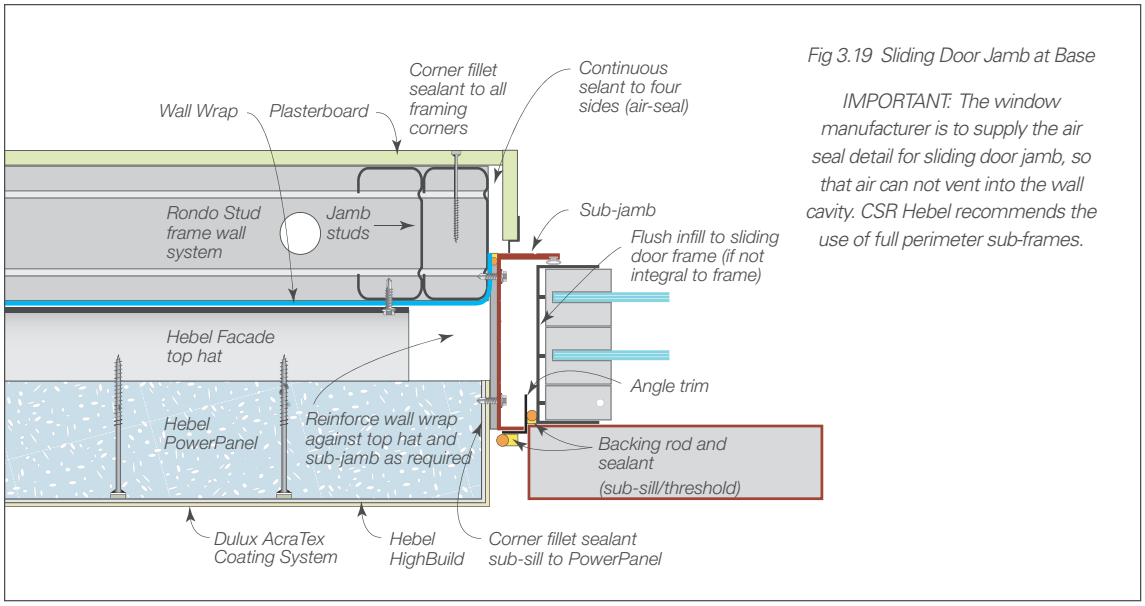


Fig 3.19 Sliding Door Jamb at Base

*IMPORTANT: The window manufacturer is to supply the air seal detail for sliding door jamb, so that air can not vent into the wall cavity. CSR Hebel recommends the use of full perimeter sub-frames.*

Fig 3.20 Sliding Door Head

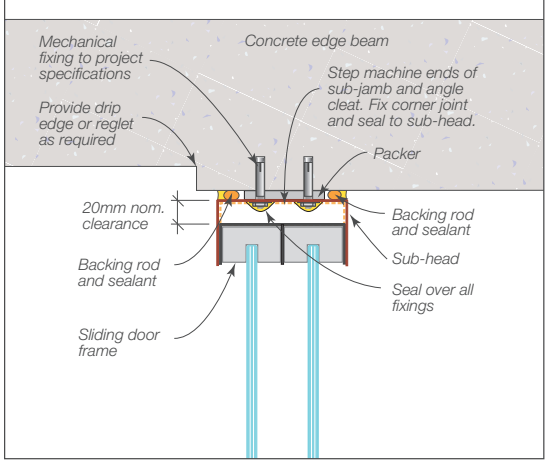


Fig 3.21 Sliding Door Base – side elevation

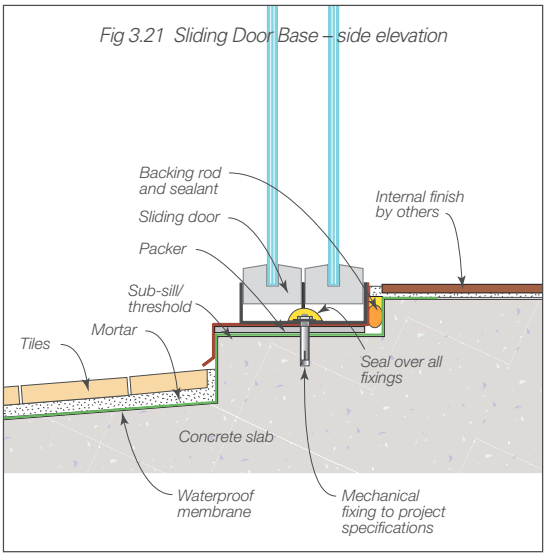

*Fig 3.22 Party Wall Intersection*

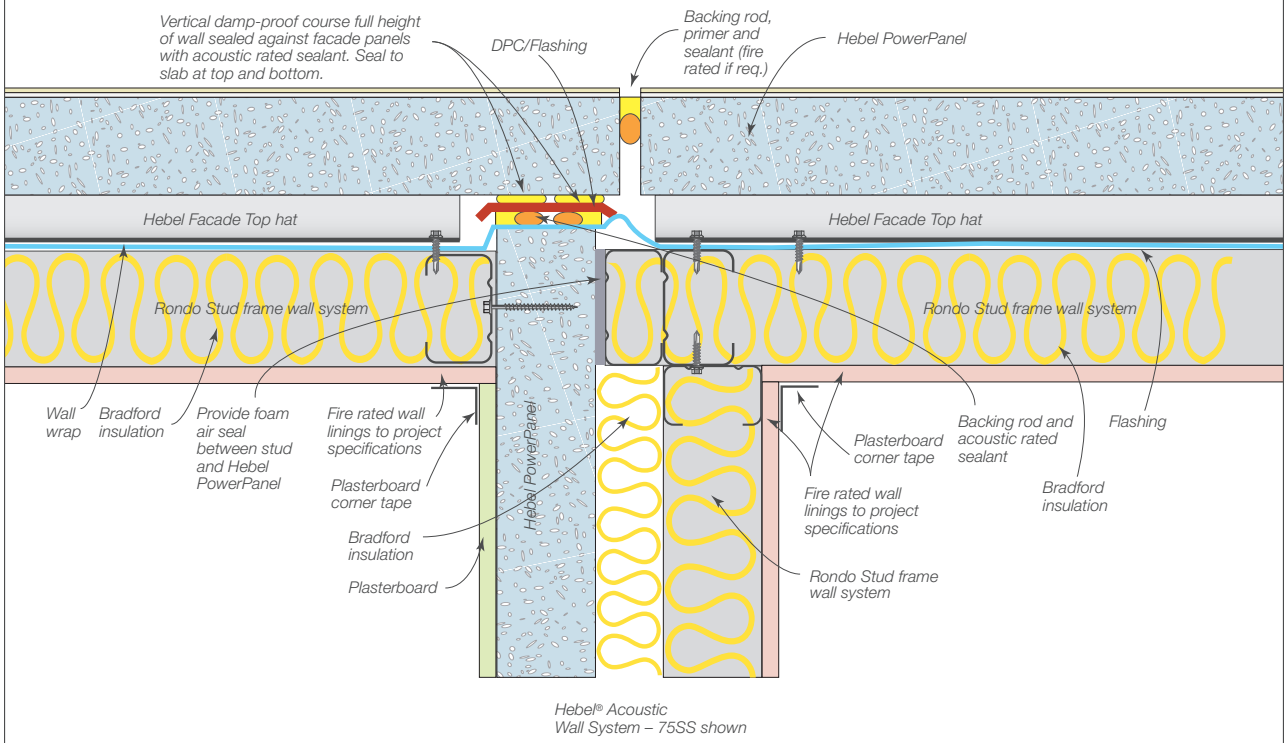


*IMPORTANT: Treatment of party wall junctions requires specific project design and approval by structural, fire, acoustic and other project consultants.*

*Fig 3.23 Balcony Detail*

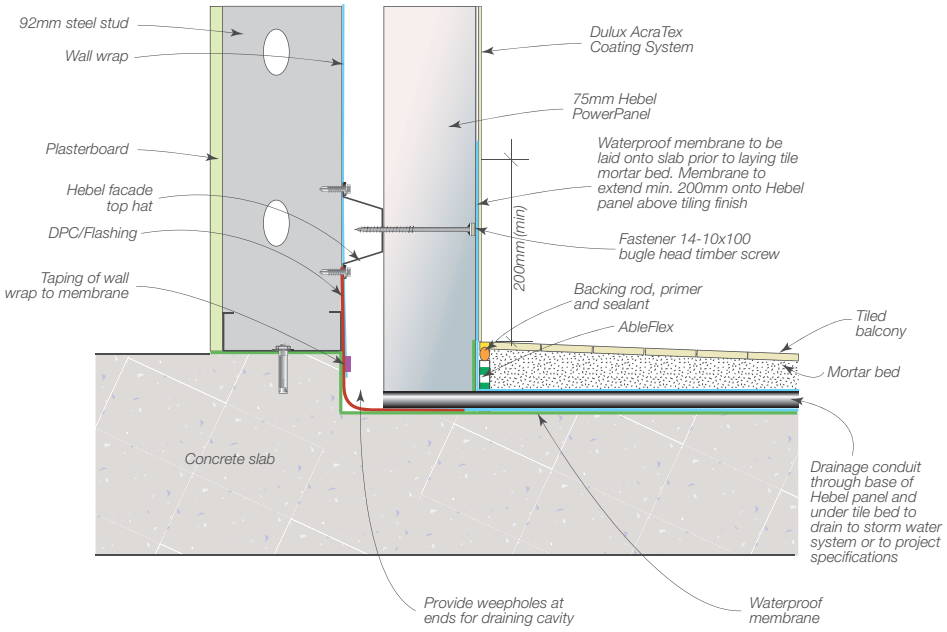


*NOTE: Pressure equalisation slots are to be installed at the tops of panels at a max. 3.0m CTRs over balconies greater than 3m in width.*

Fig 3.24 Intertenancy Facade Junction Detail

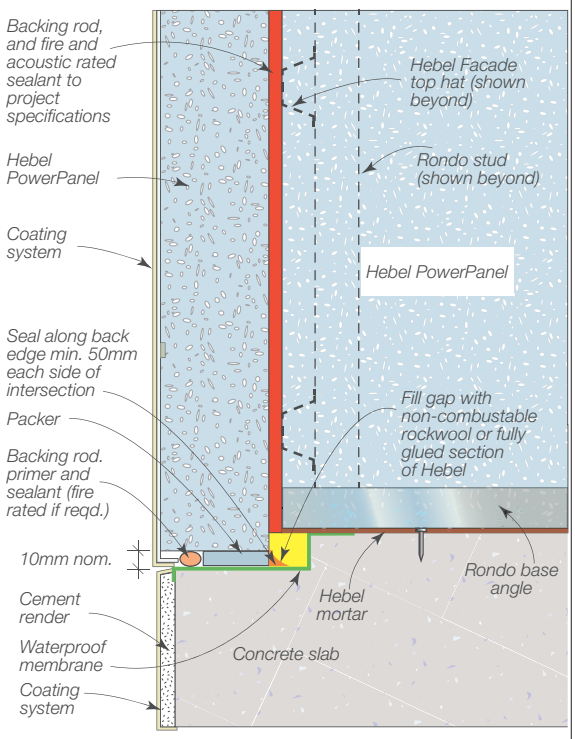


Fig 3.25 Handrail Attachment

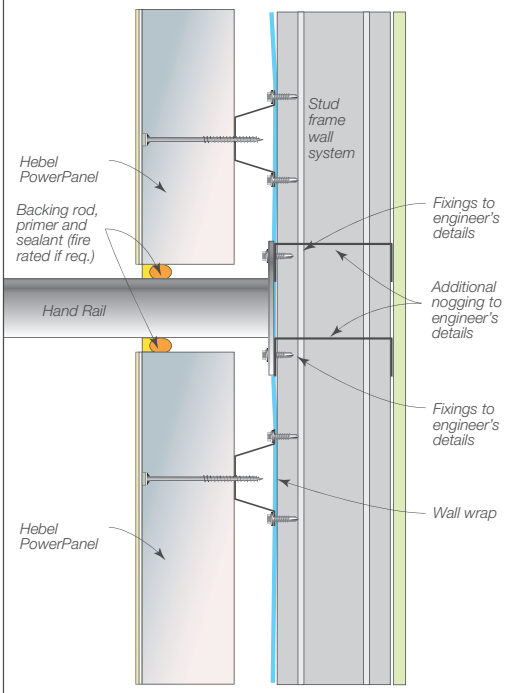


NOTE: All elements to be supported by wall shall be connected to the structural steel framing. No loads are to be carried by Hebel PowerPanel cladding.

Fig 3.26 Parapet Capping

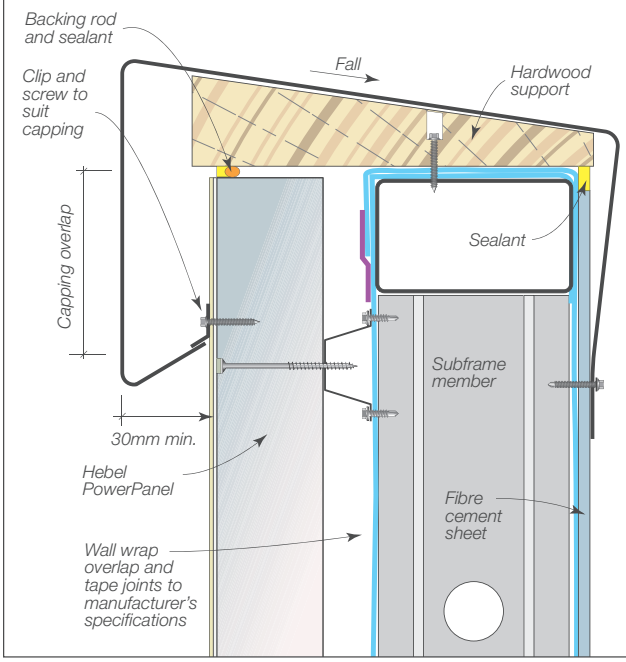


NOTE: Parapet capping shall be designed and fastened in accordance with SAA – HB39 1997 – Installation Code for Metal Roofing and Wall Cladding. Stop ends shall be incorporated to all flashings.

Table 3.27 Capping Overlap.

| Ultimate Design Wind Pressure (kPa) | Capping Overlap Minimum (mm) |
|---|---|
| 1.5 | 50 |
| 3.5 | 100 |
| 5.0 | 150 |
| 7.0 | 200 |

Insulation

A4/8 K10FMG2 AW2421
Issue 4 Jan 2019

# Kooltherm® K10 FM G2 Soffit Board

## INSULATION FOR CONCRETE SOFFITS

GROUP 2
NCC Classification: AS 5637

- Super high performance rigid thermoset phenolic insulation
- Fibre-free, closed cell insulation core
- FM approved to Class 1 fire rating Class Number 4880
- Group 2 NCC fire classification determined in a full room ISO 9705 test in accordance with AS/NZS 5637
- Resistant to the passage of water vapour
- No CFC or HCFC used in manufacture
- Has zero ODP and low GWP
- NCC and AS/NZS 4859.1 compliant
- Made in Australia
- CodeMark-certified for NCC compliance

CODEMARK® Australia
Certificates CM20201

Fibre-free Core

FM APPROVED

AUSTRALIAN MADE

Kingspan®

*Low Energy – Low Carbon Buildings*

# Typical Constructions and Total R-values

## Concrete Soffit Floor / Roof Installation

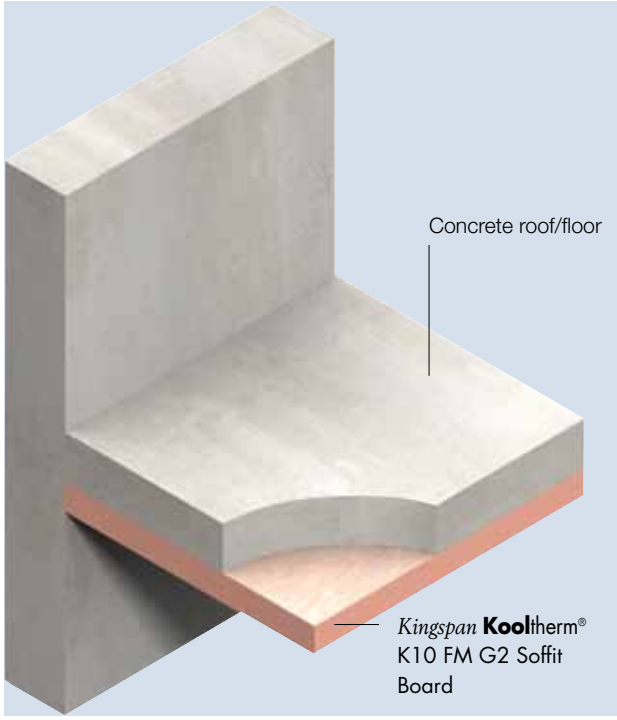


*Figure 1*

| Total R–values for various thicknesses of *Kingspan* **Kool**therm® K10 FM G2 Soffit Board | | |
|---|---|---|
| Product Thickness | Heat flow in | Heat flow out |
| Roof application, no ceiling (150 mm concrete) | | |
| 25 mm | $R_T$2.1 | $R_T$1.5 |
| 30 mm | $R_T$2.3 | $R_T$1.8 |
| 40 mm | $R_T$2.8 | $R_T$2.3 |
| 50 mm | $R_T$3.4 | $R_T$2.9 |
| 60 mm | $R_T$3.9 | $R_T$3.4 |
| 70 mm | $R_T$4.4 | $R_T$3.9 |
| 80 mm | $R_T$4.9 | $R_T$4.4 |
| 90 mm | $R_T$5.4 | $R_T$4.9 |
| Roof application, suspended ceiling (150 mm concrete) | | |
| 25 mm | $R_T$2.4 | $R_T$1.9 |
| 30 mm | $R_T$2.6 | $R_T$2.2 |
| 40 mm | $R_T$3.1 | $R_T$2.6 |
| 50 mm | $R_T$3.7 | $R_T$3.2 |
| 60 mm | $R_T$4.2 | $R_T$3.7 |
| 70 mm | $R_T$4.7 | $R_T$4.2 |
| 80 mm | $R_T$5.2 | $R_T$4.7 |
| 90 mm | $R_T$5.7 | $R_T$5.3 |

| Total R–values for various thicknesses of *Kingspan* **Kool**therm® K10 FM G2 Soffit Board | | |
|---|---|---|
| Product Thickness | Heat flow in | Heat flow out |
| Unenclosed sub-floor application (150 mm concrete) | | |
| 25 mm | $R_T$1.4 | $R_T$1.5 |
| 30 mm | $R_T$1.7 | $R_T$1.7 |
| 40 mm | $R_T$2.2 | $R_T$2.2 |
| 50 mm | $R_T$2.8 | $R_T$2.8 |
| 60 mm | $R_T$3.3 | $R_T$3.3 |
| 70 mm | $R_T$3.8 | $R_T$3.8 |
| 80 mm | $R_T$4.3 | $R_T$4.3 |
| 90 mm | $R_T$4.8 | $R_T$4.8 |
| Enclosed sub-floor application (150 mm concrete) | | |
| 25 mm | $R_T$2.2 | $R_T$2.8 |
| 30 mm | $R_T$2.4 | $R_T$3.0 |
| 40 mm | $R_T$2.9 | $R_T$3.5 |
| 50 mm | $R_T$3.5 | $R_T$4.1 |
| 60 mm | $R_T$4.0 | $R_T$4.6 |
| 70 mm | $R_T$4.5 | $R_T$5.1 |
| 80 mm | $R_T$5.0 | $R_T$5.6 |
| 90 mm | $R_T$5.5 | $R_T$6.1 |

The R-values shown are Total R-values for the building element as required by the Energy Provisions of the Building Code of Australia. *Kingspan* **Kool**therm® products are manufactured, tested and packaged in conformance with AS/NZS 4859.1.

The contribution of the product Total R-value depends on installation and environmental conditions.

The R-value will be reduced in the event of the accumulation of dust on the upward facing surfaces and in those cavities that are ventilated.

# Product Details

## Product Description

*Kingspan* **Kool**therm® K10 FM G2 Soffit Board is a super high performance, fibre-free rigid thermoset, closed cell phenolic insulation core, sandwiched between an upper tissue-based facing and a lower facing of highly reflective aluminium foil autohesively bonded to the insulation core during manufacture.

*Kingspan* **Kool**therm® K10 FM G2 Soffit Board is manufactured without the use of CFCs/HCFCs and has zero Ozone Depletion Potential (ODP) and low Global Warming Potential (GWP).

| Product Data | |
|---|---|
| Thermal Conductivity (λ-value) | 0.020 W/mK (Insulant Thickness ≥ 45 mm)<br>0.021 W/mK (Insulant Thickness 25 - 44 mm) |
| Emittance (Foil Face) | E0.14 |
| Product Dimensions | 2400 mm x 1200 mm (2.88 $m^2$) |
| Product Thickness | 25, 30, 40, 50, 60, 70, 80, 90 mm |

For a white finish or other customised finishes and facings please refer to the "*Kingspan* **Kool**therm® K10 FM G2W White" and the "*Kingspan* **Kool**therm® K10 PLUS" product brochure respectively.

## Product R-value

| Product Thickness | Product R-value |
|---|---|
| 25 mm | R1.2 |
| 30 mm | R1.4 |
| 40 mm | R1.9 |
| 50 mm | R2.5 |
| 60 mm | R3.0 |
| 70 mm | R3.5 |
| 80 mm | R4.0 |
| 90 mm | R4.5 |

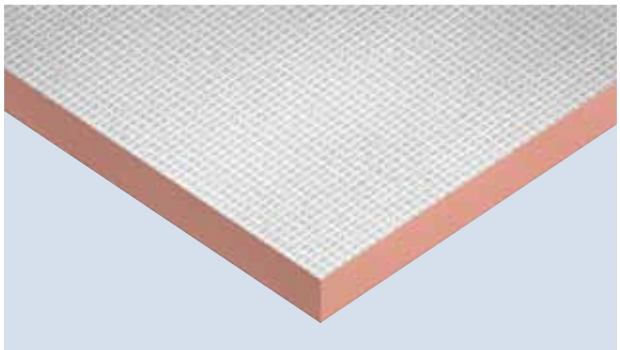

*Figure 2 Super high performance Kingspan* **Kool**therm® K10 FM G2 Soffit Board

## Specification Guide

*Kingspan* **Kool**therm® K10 FM G2 Soffit Board

The soffit insulation shall be *Kingspan* **Kool**therm® K10 FM G2 Soffit Board ___ mm thick, CodeMark-certified, Group 2, with a tested smoke obscuration of not more than 100 $m^2$/kg, comprising a CFC/HCFC-free and zero Ozone Depletion Potential (ODP) rigid thermoset phenolic insulation core with an upper tissue-based facing and a lower facing of highly reflective aluminum foil, manufactured under a management system certified to ISO 9001:2015, ISO 14001:2015, OHSAS 18001:2007 and ISO 50001:2011 by Kingspan Insulation Pty Ltd and shall be installed in accordance with the instructions issued by them.

A Project Specific Warranty provided by Kingspan Insulation must be submitted.

## Standards and Approvals

*Kingspan* **Kool**therm® K10 FM G2 Soffit Board is manufactured to the highest standards and certified under the following management systems:

| Standard | Management System |
|---|---|
| ISO 9001:2015 | Quality Management |
| ISO 14001:2015 | Environmental Management |
| OHSAS 18001:2007 | Health and Safety Management |
| ISO 50001:2011 | Energy Management |

## Product Testing

| Characteristic | Standard | Result |
|---|---|---|
| Compressive Stress | AS 2498.3 | Typically exceeds 100 kPa at 10% compression |
| Water Vapour Resistance | BS EN 12086:1997 / I.S. EN 12086:1998 | > 100 MN·s/g |

## Fire Performance

| Test | Test Method | Result |
|---|---|---|
| Ignitability, Flame spread, Heat release, Smoke release | AS 1530.3 | Spread of Flame Index: 0<br>Smoke Development ≤ 3 |
| NCC Group Number | AS ISO 9705 | Group 2<br>Tested in accordance with AS/NZS 5637 as required by NCC Amdt. 1 |
| SMOGRARC | AS ISO 9705 | ≤ 100 $m^2/s^2$x1000 |
| FM Class No. 4880* | UBC 26-3 | Class 1 |
| Fire-resistance test of elements of construction | AS 1530.4** | -/240/240<br>(HDPE pipe) |

** This approval is valid for ceiling / soffit installation only, with non-combustible walls. Please contact us for correct installation instructions.*
*** Testing to AS 1530.4 performed in accordance with NCC BCA C3.15 Openings for service penetrations using a 120 mm concrete soffit.*

## Durability

If correctly applied, *Kingspan* **Kool**therm® products can be expected to have a long life of service.

Their durability depends on the supporting structure and the conditions of its use.

*Kingspan* **Kool**therm® products are warranted for a period of 10 years for both residential and commercial installations.*

** Subject to the terms of the complete Kingspan* **Kool**therm® *warranty document which is available upon request or downloadable from www.kingspaninsulation.com.au.*

## Environmental Data

| Aspect | Characteristic |
|---|---|
| Recyclability | Non-contaminated insulation site waste is recyclable, but there are currently no facilities in Australia to process returned material |
| Re-usability | Re-usable if removed with care (long term of service expected) |
| Water Use | No water used in Kingspan Insulation's manufacturing process |
| Blowing Agent Global Warming Potential (GWP) | Manufactured with a blowing agent that has low GWP |
| Blowing Agent Ozone Depletion Potential (ODP) | Manufactured with a CFC/HCFC-free blowing agent that has zero ODP |
| Packaging | Contains 0% recycled product<br>Polythene wrap and EPS skids 100% recyclable |

# Installation Instructions

## Fixing Directly to Concrete Soffits

*Kingspan* **Kool**therm® K10 FM G2 Soffit Board can be fully restrained to a concrete soffit by the use of minimum 11 No. appropriate insulation fasteners with a minimum head diameter of 35 mm.

1. The fasteners should be evenly distributed over the whole area of the board and must offer a minimum 40 mm penetration into a solid substrate. Alternatively, a designer can calculate the required design strength to identify a suitable embedment for the design loading.
2. Board joints can be either staggered (see Figure 5) or squared (see Figure 6) and taped with 96 mm wide silver *Kingspan* Insulation Tape. 4 No. fasteners along each length - no less than 50 mm - no more than 150 mm from edge of board, 3 No. fasteners along the middle (offset from edge positions as per diagram Figure 3).
3. Where the board may be subject to external wind pressure, the requirement for additional fixings should be assessed in accordance with appropriate Australian wind load standards.
4. Consideration should be given to the material the fixing is made from and should be deemed appropriate for application, exposure and fire rating by the fixing manufacturer.

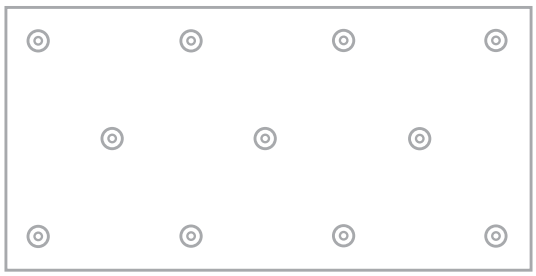

*Figure 3 Fastener pattern (11 No. per board)*
*Board size to 2400 mm x 1200 mm - 3.81 fixings / m²*

**Why 11 fixings?**

Best practice determines that any rigid board insulation, not just *Kingspan* **Kool**therm® K10 FM G2 Soffit Board, should be fixed with 11 mechanical fixings for very good reasons:

- There will always be differential expansion and contraction between any rigid insulation material and adjacent building products due to varying moisture content and temperature.
- In any concrete forming, there will be an uneven surface throughout the slab.
- Where concrete formwork is joined it is normal to have ridges of up to 3 mm which make the concrete surface uneven.
- An insulation board held horizontally may bow like any other sheetmaterial under its own weight.

Using 11 fixings ensures that the insulation board has a strong and permanent fix under the concrete soffit and that it is not compromised by any of the above issues. It also provides a proven robust fire safe solution.

These best practice recommendations are a result of over 30 years of Kingspan Insulation experience in soffit applications.

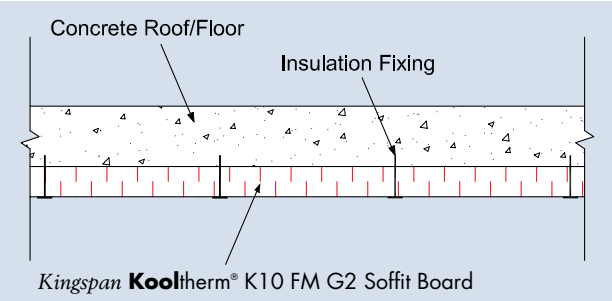


*Figure 4 Side elevation - Concrete Soffit with Kingspan* **Kool**therm® K10 FM G2 Soffit Board

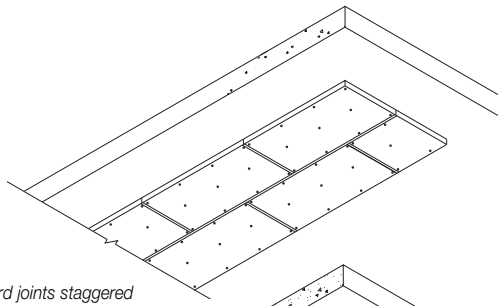

*Figure 5 Board joints staggered*

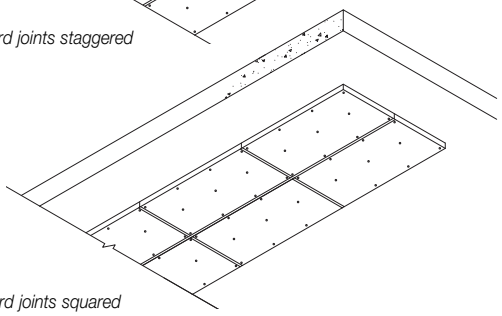

*Figure 6 Board joints squared*

# Installation Instructions (continued)

## Fixing to Timber Battens / Furring Channels

1. Alternatively, a treated softwood batten/furring channel lay-out may be adopted if there is an uneven surface or mechanical services present and direct fixing is not possible.
2. 50 mm x 25 mm battens/furring channels should be placed at 600 mm centres to coincide with the edges/centres of the boards.
3. The battens/furring channels should be fixed to the soffit by the use of a suitable fixing method e.g. shot-fire may be considered.
4. *Kingspan* **Kool**therm® K10 FM G2 Soffit Board should then be fixed to the treated timber battens/furring channels using suitable fixings. These should be placed at maximum 300 mm (maximum 200 mm when using nails into timber) in rows not greater than 600 mm apart.
5. Where the board may be subject to external wind pressure, the requirement for additional fixings may need to be assessed in accordance with appropriate wind load standards.

For advice on ancillary materials, such as fixings and tapes please contact our Technical Services Department.

## Installation around Fire Collars

1. Fitting *Kingspan* **Kool**therm® K10 FM G2 Soffit Board tight to the fire collar is recommended to reduce the effects of thermal bridging through the slab.
2. Do not cover the face of the fire collar. For fire collars to activate in a fire situation the front face needs to be exposed. This is particularly important when using cast-in collars as the face will be flush with the concrete and it would be easy to cover with the insulation board.

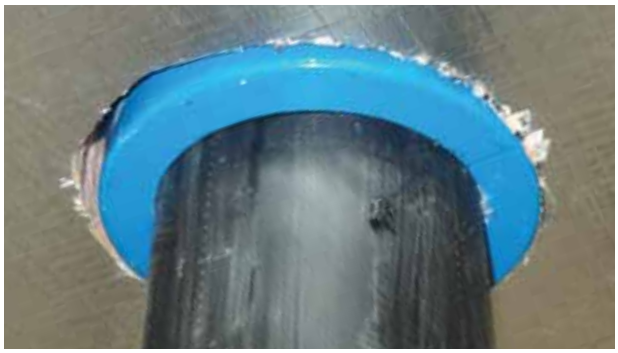

*Figure 7 Penetration example - Kingspan* **Kool**therm® K10 FM G2 Soffit Board *installed tight around the fire collar and HDPE service pipe.*

*Scan to see installation video "Fixing Directly to Concrete Soffits"*

## General

**Cutting**

Cutting should be carried out either by using a fine toothed saw, or by scoring with a sharp knife, snapping the board over a straight edge and then cutting the facing on the other side. Ensure accurate trimming to achieve close-butting joints and continuity of insulation.

**Taping**

For all fixing methods board joints should be taped with 96 mm wide silver *Kingspan* Insulation Tape (please refer to brochure "Kingspan Insulation Tape" for further information).

1. Firstly, ensure that the climate conditions are suitable for the tape being used as well as the product the tape is to be applied too.
2. The surface of the *Kingspan* **Kool**therm® to which aluminium foil tape is being applied, should be free of dust, dirt or oils. In any case, the surface should be cleaned with a dry cloth before application of the tape.
3. The release liner on the tape should be removed 300 - 600 mm at a time and the adhesive face pressed firmly onto the insulation facing. Care should be taken not to stretch the tape tightly as this will create buckles and voids in the contact area.
4. Care must also be taken to apply the tape over the centre of the join so that there is adequate area on both sides of the joint for the tape to bond. Uneven width distribution also puts additional shear stress on the smaller side of the butt joint.
5. The tape should then be wiped firmly from the centre out (like wallpaper) with a plastic squeegee. The more pressure that is applied, the more surface contact will be reached, therefore, the greater the bond surface.
6. The tape should then be cut and fitted with a knife and scissors. The same wiping instructions should then be used as above.

In the absence of other protection exposed board edges should be protected by 96 mm wide silver *Kingspan* Insulation Tape with a minimum 48 mm wide overlap onto the board face (see Figure 8) or alternatively use a UPVC c-section.

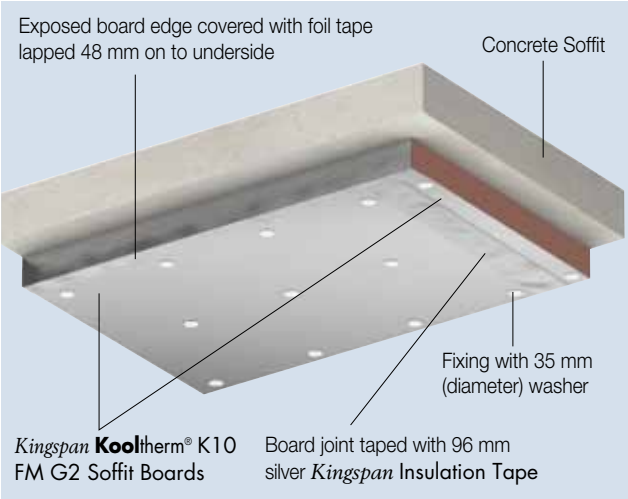


*Figure 8*

**Packaging**

According to quantity, the boards are supplied in packs, labelled and shrink-wrapped in polythene.

## Handling and Storage

**Storage**

The packaging of *Kingspan* **Kool**therm® should not be considered adequate for long term outdoor protection. Ideally boards should be stored inside a building. If, however, outdoor storage cannot be avoided then the boards should be stacked clear of the ground and covered with an opaque polythene sheet or weatherproof tarpaulin. Boards that have been allowed to get wet should not be used.

**Resistance to Solvents**

The insulation core is resistant to short–term contact with petrol and with most dilute acids, alkalis and mineral oils. However, it is recommended that any spills be cleaned off fully before the boards are installed. Ensure that safe methods of cleaning are used, as recommended by suppliers of the spilt liquid. The insulation core is not resistant to some solvent-based adhesive systems, particularly those containing methyl ethyl ketone. Adhesives containing such solvents should not be used in association with this product. Damaged boards or boards that have been in contact with harsh solvents or acids should not be used.

**OH & S**

Kingspan Insulation products are chemically inert and safe to use. A Product Safety Information sheet is available from Kingspan Insulation Pty Ltd.

Please note that the reflective surfaces on this product are designed to enhance their thermal performance. As such, they will reflect light as well as heat, including ultraviolet light. Therefore, if these boards are being installed during bright or sunny weather, it is advisable to wear UV protective sunglasses or goggles and if the skin is exposed for a significant period of time, to protect bare skin with a UV block sun cream.

**Foil facings are conductive to electricity - avoid contact with un-insulated electrical cables and fittings.**

Installation must be in accordance with AS 3999 *Bulk Thermal Insulation Installation* and AS 3000 *Electrical Installations* (Wiring Rules).

# Contact Details

## General Enquiries

Tel: 1300 247 235
Email: info@kingspaninsulation.com.au

*Kingspan Insulation Pty. Ltd. reserves the right to amend product specifications without prior notice. The information, technical details and fixing instructions etc. included in this literature are given in good faith and apply to uses described. Recommendations for use should be verified as to the suitability and compliance with actual requirements, specifications and any applicable laws and regulations. For other applications or conditions of use, Kingspan Insulation offers a Technical Advisory Service the advice of which should be sought for uses of Kingspan Insulation products that are not specifically described herein. Please check that your copy of the literature is current by contacting us or visiting www.kingspaninsulation.com.au*

Kingspan®

**Kingspan Insulation Pty Ltd**
Tel: 1300 247 235
Email: info@kingspaninsulation.com.au

**www.kingspaninsulation.com.au**

INNOWOOD®
SUSTAINABLE TIMBER ALTERNATIVE

## Material Composition

| | |
|---|---|
| Recycled Wood Powder | Approximately 69% |
| Polyvinyl Chloride | Approximately 23% |
| Calcium Carbonate | Approximately 5% |
| Organic Colour Oxides | Approximately 3% |

## Material Characteristics

| Property | Standard/Report | Attribute |
|---|---|---|
| Density | AS/NZS 4266.3:2004 | Nominal 0.825 gr/cm³ |
| Coefficient of Linear Thermal Expansion | AS/NZS 4459.8 | 0.00006 mm/mm°C |
| Fire Rating Australia & New Zealand | AS/NZS 1530.3 | Ignitability Index = 11, Spread of Flame Index = 0<br>Heat Evolved Index = 0, Smoke Developed Index = 6 |
| | AS/NZS 3837:1998 | Group 3 - Standard material composition<br>Group 1 - Performance material composition (additional treatment – upon request) |
| | AS/NZS 3959:2009 | BAL29 - Performance material composition (additional treatment – upon request) |
| Fire Rating European | EN 13501-1:2007 | Class D-s3-d0 - Standard material composition<br>Class B-s3-d0 - Performance material composition (additional treatment – upon request) |
| Fire Rating United States | ASTM E84 | Class A - Performance material composition (additional treatment – upon request) |
| Weathering and UV Resistance | ISO 105-A02<br>QUV Test | UV Stable under normal environmental conditions<br>No Gloss Loss - Colour Change 4 |
| Salt Water Emersion | CSIRO-CMMT 228 | Suitable - Marine intertidal zones & salt spray environments |
| High Humidity Environment | CSIRO-CMMT 228 | Suitable - High humidity environments |
| Termite Resistance | CSIRO-FFP 996 | Suitable - Outside above ground applications |
| Moisture Content | AS/NZS 4266.3:2004 | 1.31 % |
| Moisture Movement | AS/NZS 4266.14:2004 | 0.0000044 mm/mm.RH% |
| Moisture Absorption | AS/NZS 4266.14:2004 | 0.54% Mass Change at 25°C & 85% RH (216 Hrs) |
| Wet Slip Resistance | AS/NZS 4586:2013 | P5 (Highly Resistant) |
| Modulus of Rupture | AS/NZS 4266.5:2004 | 30.78 – 32.2 MPa |
| Modulus of Elasticity | AS/NZS 4266.5:2004 | 1.527 – 2.102 GPa |
| Internal Bond Strength | AS/NZS 4266.6:2004 | 1.36 MPa |

**Innowood Australia Pty Ltd**
126 O'Connell Street, North Parramatta NSW 2151
T + 61 (02) 9630 8388
F + 61 (02) 9630 8088
www.innowood.com

# INNOWOOD Physical Properties

| Physical Property | Attribute | Standard / Report | Notes |
|---|---|---|---|
| **STRENGTH, MOISTURE and TEMPERATURE RELATED** | | | |
| Modulus of Rupture (MoR) | 30.78 - 32.2 MPa | AS/NZS 4266.5:2004 | Ultimate strength at failure |
| Modulus of Elasticity (MoE) | 1.527 - 2.102 GPa | AS/NZS 4266.5:2004 | Proof elastic limit |
| Internal Bond Strength | 1.36 MPa | AS/NZS 4266.6:2004 | Internal bond strength normal to the face of the sample |
| Specific Density | 825 – 830 kg/m3 | AS/NZS 4266.4:2004 | At equilibrium moisture content: (EMC) - 23ºC & 50% RH |
| Moisture Content | 1.31% | AS/NZS 4266.3:2004 | At equilibrium moisture content: (EMC) - 23ºC & 50% RH |
| Moisture Absorption | 0.54 % Mass Change | AS/NZS 4266.14:2004 | Moisture absorption mass change is reversible.<br>Mass change of material at 25ºC & 85% RH / ~216 hrs. |
| Moisture Movement | δ =4.4 x 10-6 mm/mm/% R.H.<br>Extrapolated Average | AS/NZS 4266.14:2004 | Moisture movement is reversible.<br>Final length calculated as follows: Lf = Li (1 + Δδ R.H.) |
| Surface Water Absorption | 1.0435 g/m2/hr<br>Extrapolated Average | AS/NZS 4266.12:2003 | Observed capillary moisture absorption similar. |
| Thermal Coefficient of Linear Expansion (α). | A = ~6.0 x 10-5 mm/mm/0C<br>Estimated Average | REF AS 4459.8 | Thermal linear movement is reversible |
| Impact Resistance | Mean failure height: 1330mm | ASTM D4495-12 | Specimen thickness: 28.0mm<br>Mass of the falling weight: 5Kg<br>Diameter of the falling weight: 63.5mm |
| | Mean failure energy: 59J | | |
| Static Coefficients of friction | 0.57 | ASTM D2394-05<br>(2011) Section 33~37 | Specimen: 625*145*28.10mm, Testing Speed: 1.27mm/min |
| Sliding Coefficients of friction | 0.36 | | Specimen: 625*145*28.10mm, Testing Speed: 51mm/min |
| Abrasion Resistance | Weight loss: 108mg | ASTM D4060-10 | Wheel: CS-10, Load: 1000g/wheel (total 2000g), Cycles: 1000 |
| INNOWOOD is an extruded product and the grain direction of the waste-wood fibres and the polymers are typically along the direction of the product profile.<br>The characteristic flexural strength attributes are tested along the length of the product profiles. | | | |

**Innowood Australia Pty Ltd**
126 O'Connell Street, North Parramatta NSW 2151
T + 61 (02) 9630 8388
F + 61 (02) 9630 8088
www.innowood.com

# INNOWOOD Physical Properties

INNOWOOD products can tolerate a temperature range from -20°C to +65°C, if the product is to be used for any temperature outside the mentioned range or within a 2m radius of a metal roof or any reflective surface that reflects sunlight onto the board which increases the board temperature beyond +65°C, then please consult INNOWOOD for special installation requirements.

| Physical Property | Attribute | Standard / Report | Notes |
|---|---|---|---|
| **FIRE RELATED** | | | |
| Early Fire Hazard Indices<br>• Ignitability Index<br>• Spread of Flame Index<br>• Heat Evolved Index<br>• Smoke Developed Index | 11[0 – 20]<br>0 [0 – 10]<br>0 [0 – 10]<br>6 [0 – 10] | AS/NZS 1530.3<br>CSIRO<br>Report FNE11482 | **Standard Composition**<br>Self-extinguishing with no support for spread of flame or further combustion.<br>Suitable for most applications under BCA classifications – 1, 2, 3, 5, 6, 8 or 9b (Subject to individual application). |
| Fire Hazard Property | Group 1 (By Request) | AS/NZS 3837<br>Specification A2.4 of BCA | **Performance Composition**<br>Average Specific Extinction Area: 231.0 m²/kg,<br>Specification C1.10 section 4(c) of the BCA. Specified Formulation |
| Bushfire Attack Level (BAL rating) | Up to BAL-29 (By Request) | AS3959:2009<br>Construction of Buildings in Bushfire Prone Areas.<br>Appendix F. | **Performance Composition** that has met the requirements for bushfire-resisting timber and is deemed to be acceptable to withstand exposure up to BAL-29. Specified Formulation |
| **DURABILITY RELATED** | | | |
| UV Resistant Coating | UV Stable | ISO 105-A02<br>AWTA<br>Report 7-5600004-NV | Continuous cyclic QUV test – 1000 hrs<br>UV stable under normal environmental conditions<br>Gloss Loss Nil - Colour change 4 |
| Salt Water Emersion | No adverse effects | CSIRO-CMMT<br>Report No. 228/R2 | Suitable for marine intertidal zones and salt spray environments |
| High Humidity Environment | No adverse effects | CSIRO-CMMT<br>Report No. 228/R2 | Suitable for high humidity environments |
| Termite Resistance | Deemed termite resistant | CSIRO-FFP<br>Report No; 996 | Suitable for outside above-ground applications |

**Innowood Australia Pty Ltd**
126 O'Connell Street, North Parramatta NSW 2151
T + 61 (02) 9630 8388
F + 61 (02) 9630 8088
www.innowood.com

# INNOWOOD Physical Properties

| Physical Property | Attribute | Standard / Report | Notes |
|---|---|---|---|
| **ENVIRONMENT RELATED** | | | |
| Volatile compound emissions | Deemed very low | CETC<br>Report No; CV090305 | Suitable for use in indoor environments |
| **MISCELLANEOUS PROPERTIES** | | | |
| Wet Slip Resistance | Class P5 | AS/NZS 4586: 2013 | Wet Pendulum Slip Resistance |
| Fastener Pull Out | 91.85 N | AS 1649 | Ring-shank nails and screws have an enhanced pull out force |

**IMPORTANT** : All INNOWOOD products must be installed in strict accordance with INNOWOOD'S current (at time of installation) "INSTALLATION MANUAL" and "CARE AND MAINTENANCE GUIDELINES" which can be downloaded from our website : www.innowood.com

Failure to comply with these documents may void warranty and result in an unsatisfactory outcome.

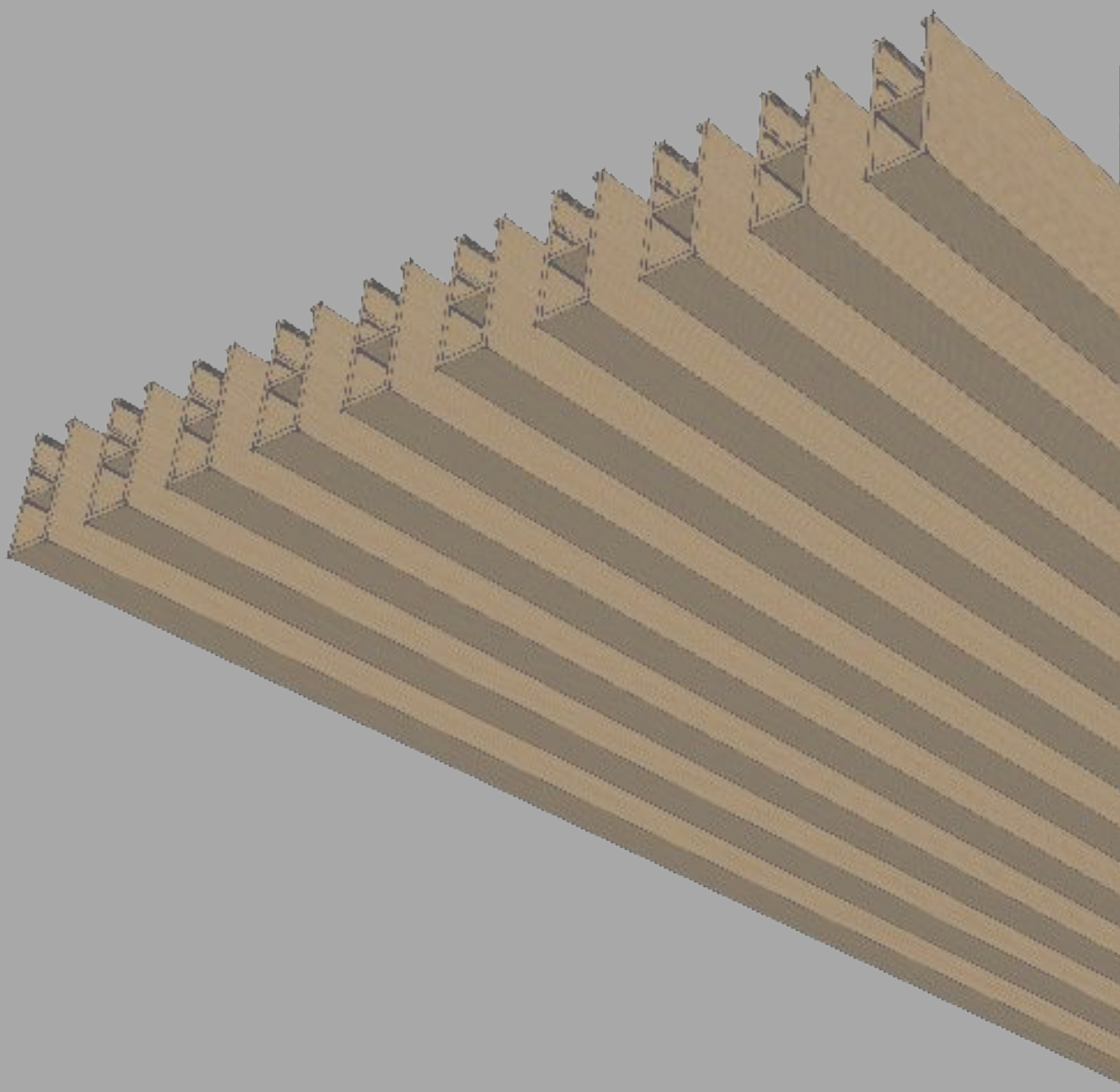

# INNOCEIL

## CONCEAL CLIP. SHIPLAP. SLATTED & SUSPENDED CLICK ON FIXING

INSTALLATION MANUAL

# BEFORE YOU COMMENCE

Please note that:

The Product is subject to natural variation* in finish as part of the manufacturing process. The purchaser or their installer/ builder is responsible for inspecting, prior to installation, the colour, finish and size of the Product, identifying whether the Product has any other defect or manufacturing fault, and for ensuring the Product meets surface appearance and product specification requirements. Subject to the terms of our warranty, INNOWOOD is not liable for claims made after the installation of the Product that relate to surface appearance and product specification.

*INNOWOOD product is made predominantly from timber hardwood waste, colour will vary up to +/-20% according to the hardwood species used in its manufacture.

It is the responsibility of the specifier or other party to ensure that the information in this manual is appropriate for the intended application and further design detailing may have to be made for specific applications that fall outside the scope of the manual.



## INNOCEIL FIXING- PROFILE

| CONCEAL CLIP &SHIPLAP FIXING |  |  |  |  |  |  |
|---|---|---|---|---|---|---|
| SECTION |  |  |  |  |  | 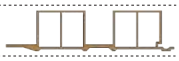 |
| PRODUCT CODE | CL14025 | CL14010 | CL17012 | CL20420 | CL16728 | CL27765 |
| COVERAGE | 140mm | 120mm | 170mm | 197mm | 148mm | 250mm |
| SPAN CENTRES* | 450mm | 450mm | 450mm | 450mm | 450mm | 450mm |

| SLATTED |  |  |  |  |  |
|---|---|---|---|---|---|
| SECTION |  |  |  |  |  |
| PRODUCT CODE | CL06516 | CL09028 | CL10050 | CL12530 | CL15050 |
| COVERAGE | 65/16mm | 90/28mm | 100/50mm | 125/30mm | 150/50mm |
| SPAN CENTRES* | 450mm | 450mm | 450mm | 450mm | 450mm |

| SUSPENDED CLICK ON |  |  |
|---|---|---|
| SECTION |  |  |
| PRODUCT CODE | CL02050 | CL03070 |
| COVERAGE | 20mm | 30mm |
| SPAN CENTRES* | 450mm | 450mm |

*Noted:*

*Guide only, span is dependent on region and wind load, please confirm with structural engineer prior to installation.*

# Installation Tips and Requirements

INNOWOOD products can be worked with ordinary woodworking tools such as:

| | |
|---|---|
| Circular Saw | Cordless Drill |
| Crosscut Mitre Saw | Level & Chalk Line |
| Carpenters Square | Tape Measure |

*NOTE:*

To ensure long- term performance, we recommend that a professional trade person carry out the installation. The installation MUST be carried out in accordance with these instructions including the use of all trims and accessories.

## Site storage & Product Handling

- INNOWOOD boards should not be stored in the open or covered or wrapped with plastic sheet. INNOWOOD boards are a finished product, do not dump or drop when loading or unloading. Always handle with care.
- INNOWOOD boards should be stored under cover and protected from the elements (including direct sunlight and rain) until ready to install. Remove any plastic wrap including shrink wrap and store on a dry and flat surface supported at max 450mm centres.
- When removing INNOWOOD boards from the pack, do not slide boards against each other, lift the boards and set them down carefully.
- INNOWOOD boards should be carried on their edge for better support.
- When handling INNOWOOD boards take care to avoid scratches, nicks and other damage to the boards.

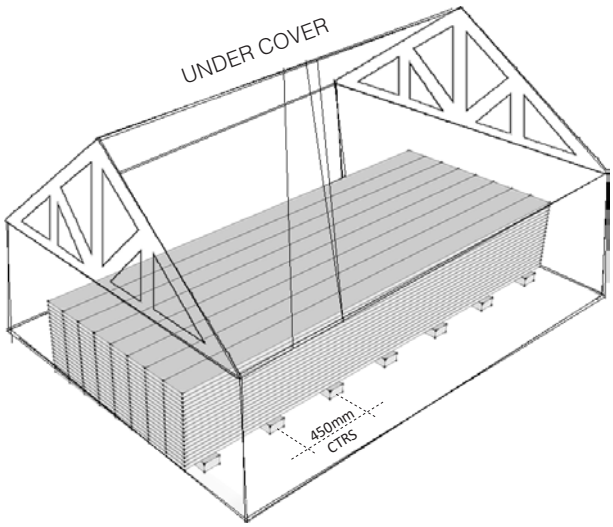


## Thermal movement

Any wood based products will expand and contract with changes in temperature. The amount of expansion varies according to the amount of change in temperature. Although thermal movements are reversible, these movements due to temperature change may vary by up to 2mm per meter.

INNOWOOD boards that have been exposed to direct sun for several hours, prior to installation will have expanded more than boards left in the shade. It is important to maintain an average consistent temperature for all boards as they are being installed.

Avoid installing in full sun if ambient temperature is above 30°C. Ensure the boards are kept out of the sun until installed to limit the boards expansion prior to installation. INNOWOOD products can tolerate a temperature range from -20°C to +65°C.

If the product is to be used in an environment outside of this temperature range, please consult INNOWOOD.

## Please bear in mind that:

- Where INNOWOOD boards are to be screw fixed, clearance holes must be pre-drilled before fixing (both INNOWOOD boards and accessories).
- The clearance hole to be drilled must be slightly greater than the outside screw thread diameter.
- Screws must be minimum 15mm but maximum 25mm away from board edges (unless noted otherwise)
- INNOWOOD products must not be used for any structural purpose.
- The cut surface must be sealed with a layer of protective coating such as a water based deck sealer before installation.
- When exposed to direct sunlight, surface temperature may be significantly hotter than ambient temperature.

## Framing

INNOCEIL systems utilise various common framing formats however, this manual cannot address all possible solutions, further design detailing may have to be made for specific applications that fall outside the scope of the manual.

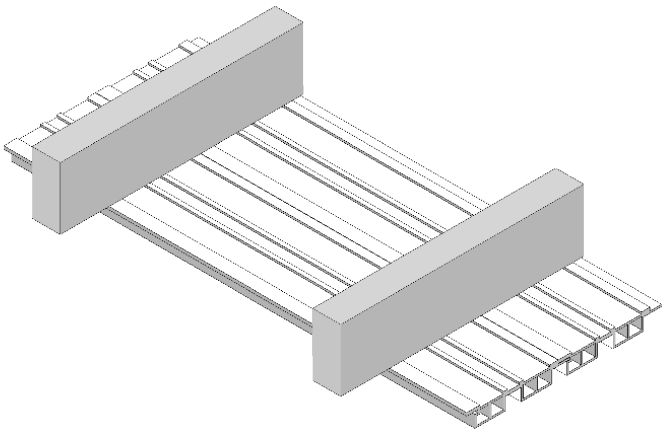

**A. SCREW FIXED DIRECTLY TO TIMBER/STEEL FLOOR/CEILING JOISTS**

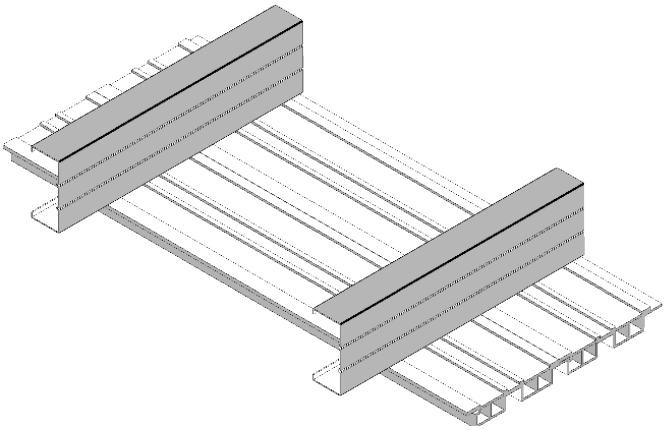

**B. SCREW FIXED DIRECTLY TO LIPPED STEEL C-STUD**

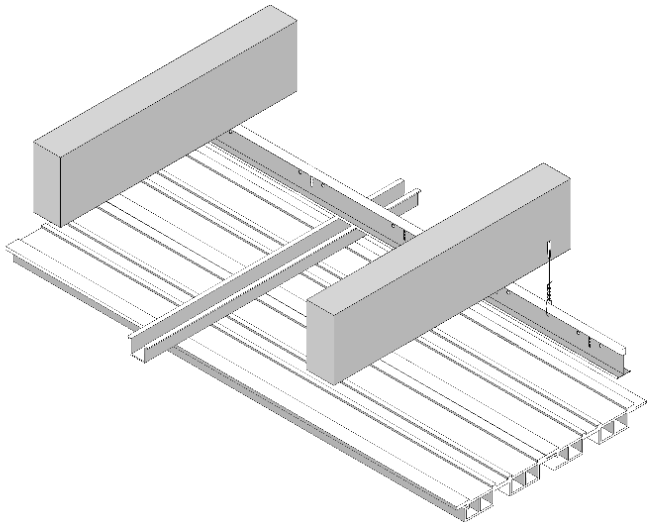

**C. SCREW FIXED TO SUSPENDED CONCEALED METAL GRID UNDER FLOOR/CEILING JOISTS**

## Framing construction requirements

INNOWOOD ceiling may be fixed to seasoned timber joists or to a proprietary structural system.

Joists spacing for INNOWOOD ceiling is nominally set at 450mm centres when used as internal lining and 300mm centres max when used as soffit in urban and non-cyclonic wind load areas. For higher wind-load areas reducing batten spacing may be required. All boards must span across a minimum of 3 joists.

As with all ceiling products the adequacy of a proposed installation should always be checked by a qualified engineer.

Battens must have a face not less than 45mm for timber and 35mm for steel.

Where butt joints occur, double joists must be set.

## Timber framing

The joints between posts, bearers and joists need to be able to transfer load efficiently through the structure, refer to AS1684 for design of these elements.

It is important to use adequately seasoned timber to minimise shrinkage and associated building movement, which may damage the soffit system.

## Steel framing

Steel framing must comply with AS/NZS 4600: Cold-Formed Steel Structure or AS 3623: Domestic Metal Framing.

Where steel framing members are specified, use only corrosion resistant galvanized steel framing. Specific instructions for fixing to steel frames are included where appropriate.

## Screws

Screws must comply with AS 3566 Self Drilling Screws for the Building and Construction Industries.

Screws must have a minimum Class 3 corrosion resistance, suitable for external applications in mild, moderate industrial and marine environments and Class 4 or stainless steel for severe environments.

Screws with class 1 or 2 corrosion resistance may be used for internal use depending on the individual application.

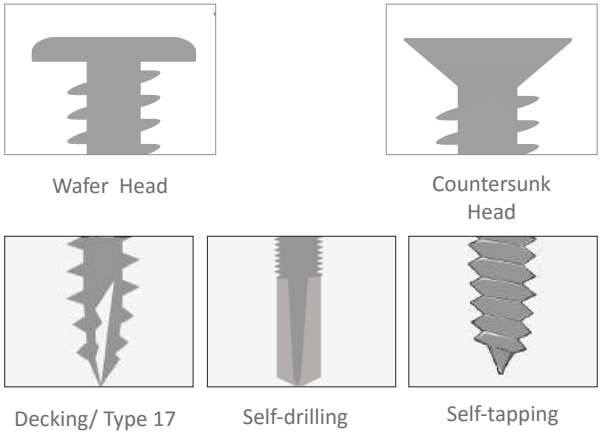

# INSTALLATION (Please note that the following instruction is also applicable for WC14025 solid profile.)

## CONCEAL CLIP FIXING

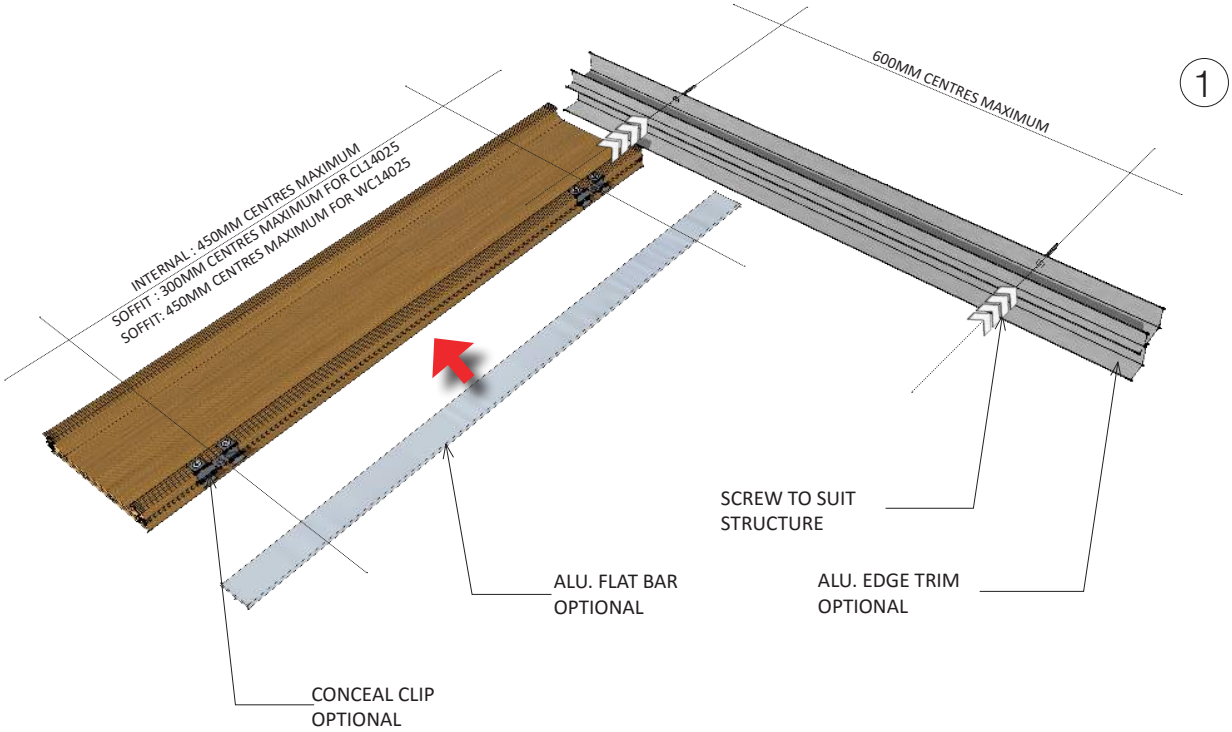


1. Use a string, spirit or laser level to establish the starting point of the ceiling. Screw fix aluminium starter using v-groove as reference, ensure the screw head is flushed with starter surface to allow ceiling board to fit in later.

2. If Concealed Clip option is used, then make sure that the clip is screwed to boards prior to putting the next joining board.

3. Joists span is set to no more than 450mm centres for internal application, 300mm centres for soffit using CL14025 and 450 centres for Soffit using WC14025. Paint the starter to match the colour of ceiling board if necessary. Face fixing through ceiling board is an alternative solution without using starter.

4. Position the first ceiling board into the groove of starter and temporarily hold it in place. Ensure the clip is properly clipped together with ceiling board and use flat head screw to fix the clip onto the back-structure.

NOTE

- Pre-drilling is essential.
- All screws are minimum 15mm but maximum 25mm away from board edges.

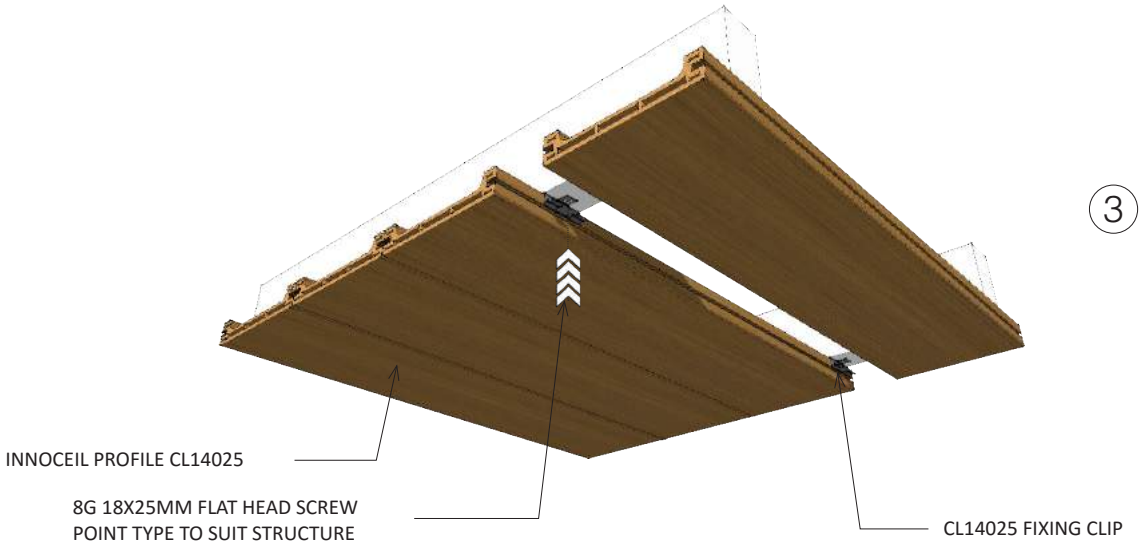


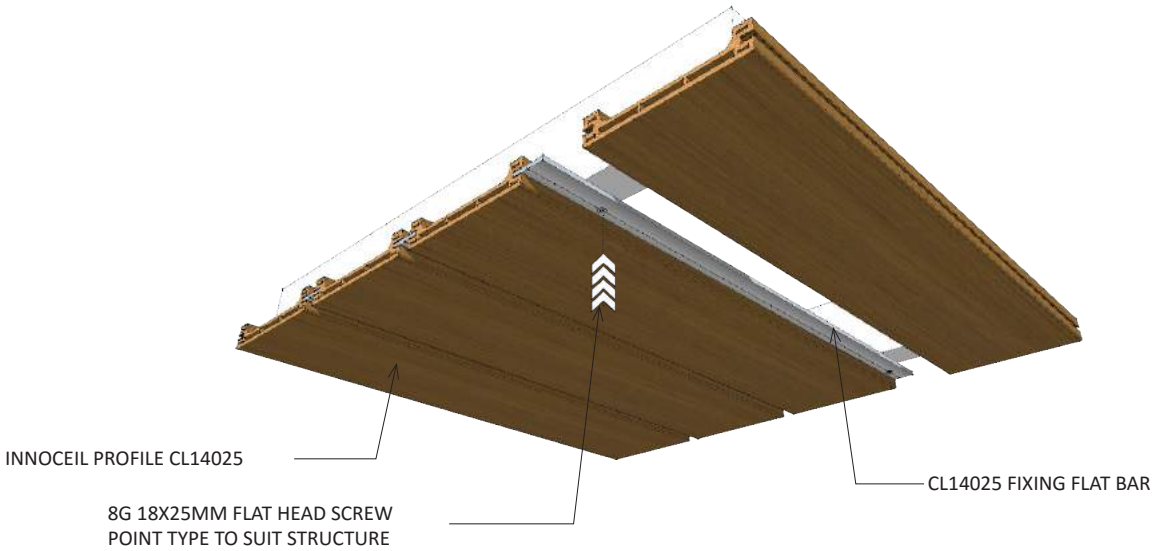


3. Position the second ceiling board into the clip fixed in step 2, ensure the ceiling board and clips are properly clipped together.

4. Repeat Step 2 and Step 3 until the ceiling is fully completed. Use the aluminium starter or appropriate cornice to finish off if necessary.

## SHIPLAP FIXING

Please note that the following instruction is also applicable for CL14010/CL17012/CL16728/CL20420/CL27765.

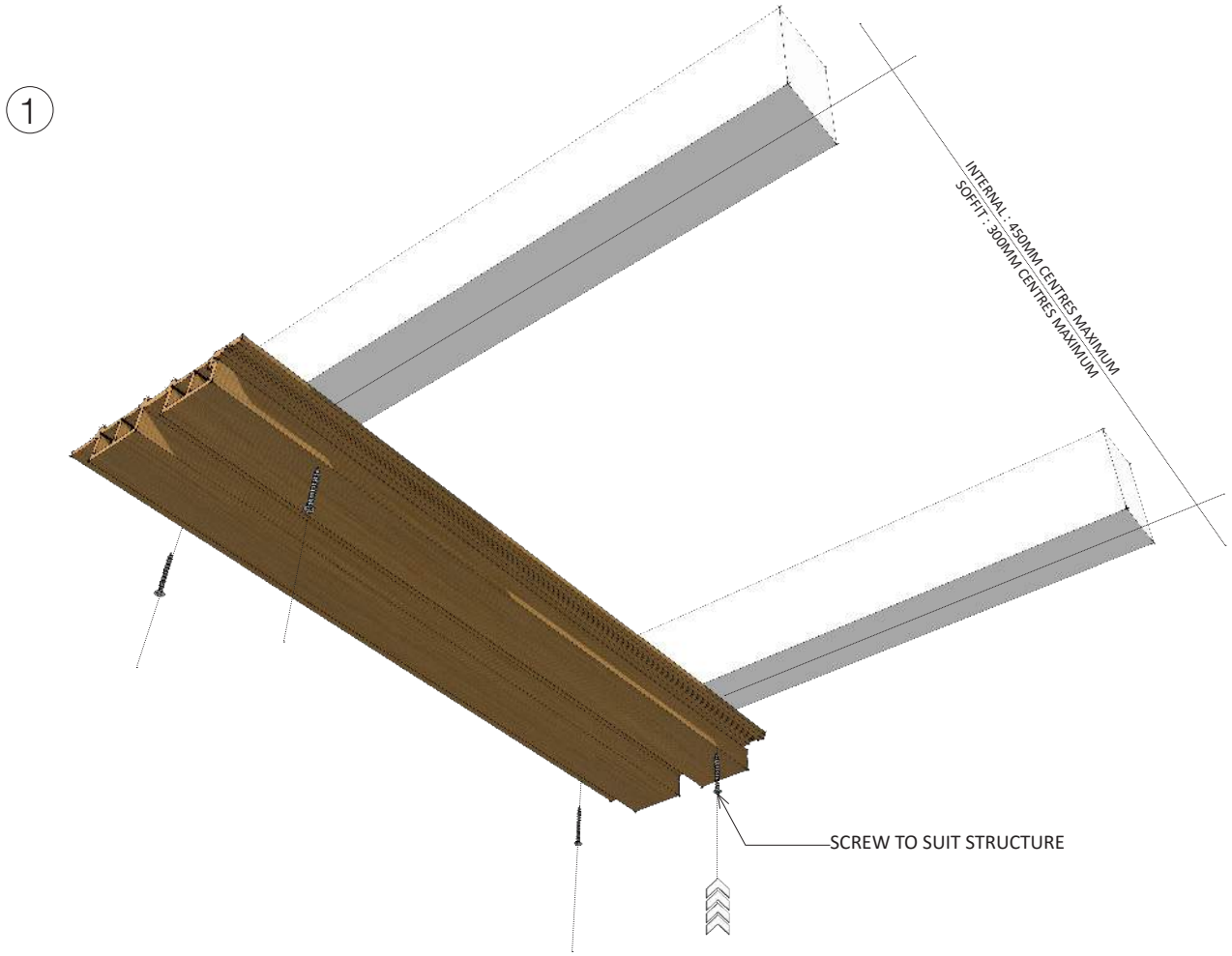


1. Use a string, spirit or laser level to establish the starting point of the ceiling. Use wafer head screw to fix the first ceiling board through the edge both sides, be careful not to break the tongue of the starting board.

1a. Joists span is set to no more than 450mm centres for internal application and 300mm centres for soffit.

1b. Ensure the screw head is flushed with board surface to allow the adjacent board to slide in.

NOTE

- Pre-drilling is essential.
- All screws are minimum 15mm but maximum 25mm away from board edges.

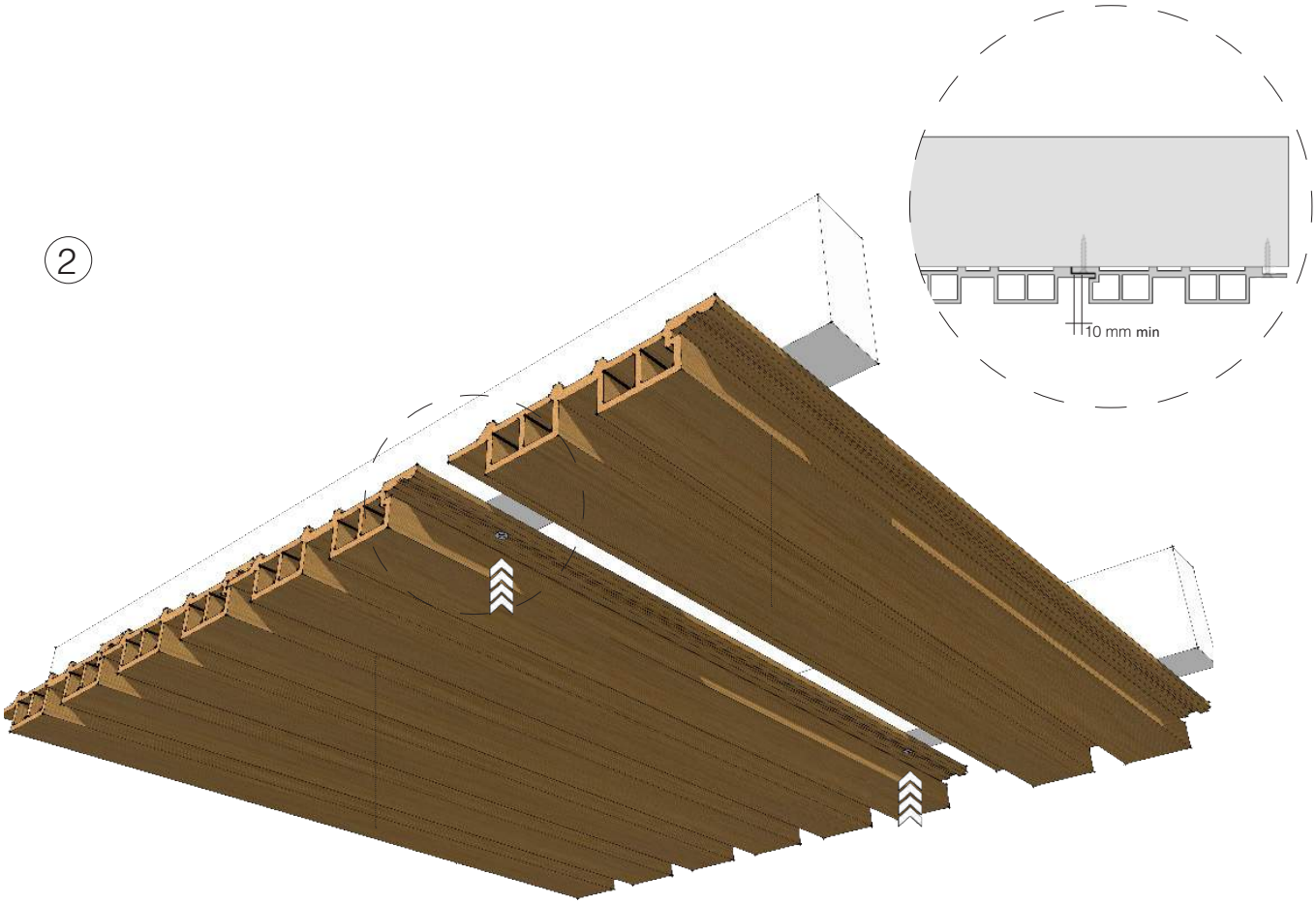


2. Position the second ceiling board into the groove of the first board and temporarily hold it in place.

2a. Use wafer head screw to screw fix the second board onto the back-structure.

2b. Repeat this step until the ceiling is fully installed. Use appropriate cornice to finish off if necessary.

NOTE
- Pre-drilling is essential.
- All screws are minimum 15mm but maximum 25mm away from board edges.

## SHIPLAP FIXING

Please note that the following instruction is also applicable for CL14010/CL17012/CL16728/CL27765.

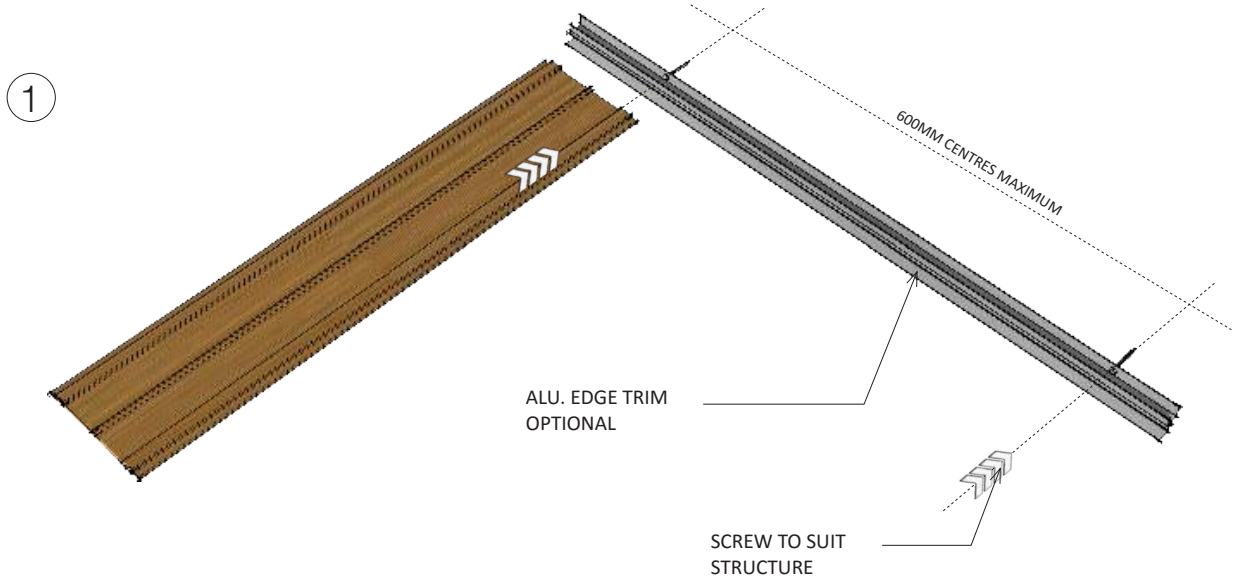


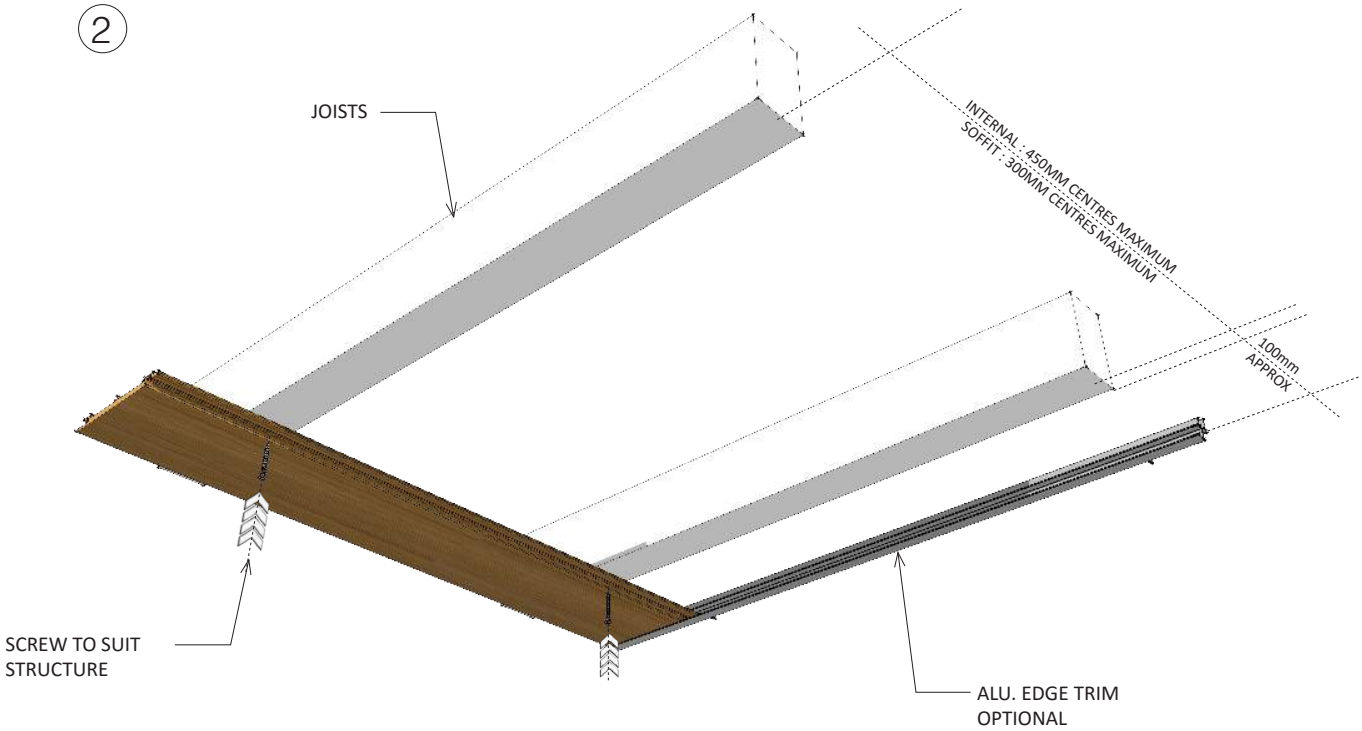


1. Use a string, spirit or laser level to establish the starting point of the ceiling. Use wafer head screw to fix the first ceiling board through the edge both sides, be careful not to break the tongue of the starting board.

2. Joists span is set to no more than 450mm centres for internal application and 300mm centres for soffit. Ensure the screw head is flushed with board surface to allow the adjacent board to slide in.

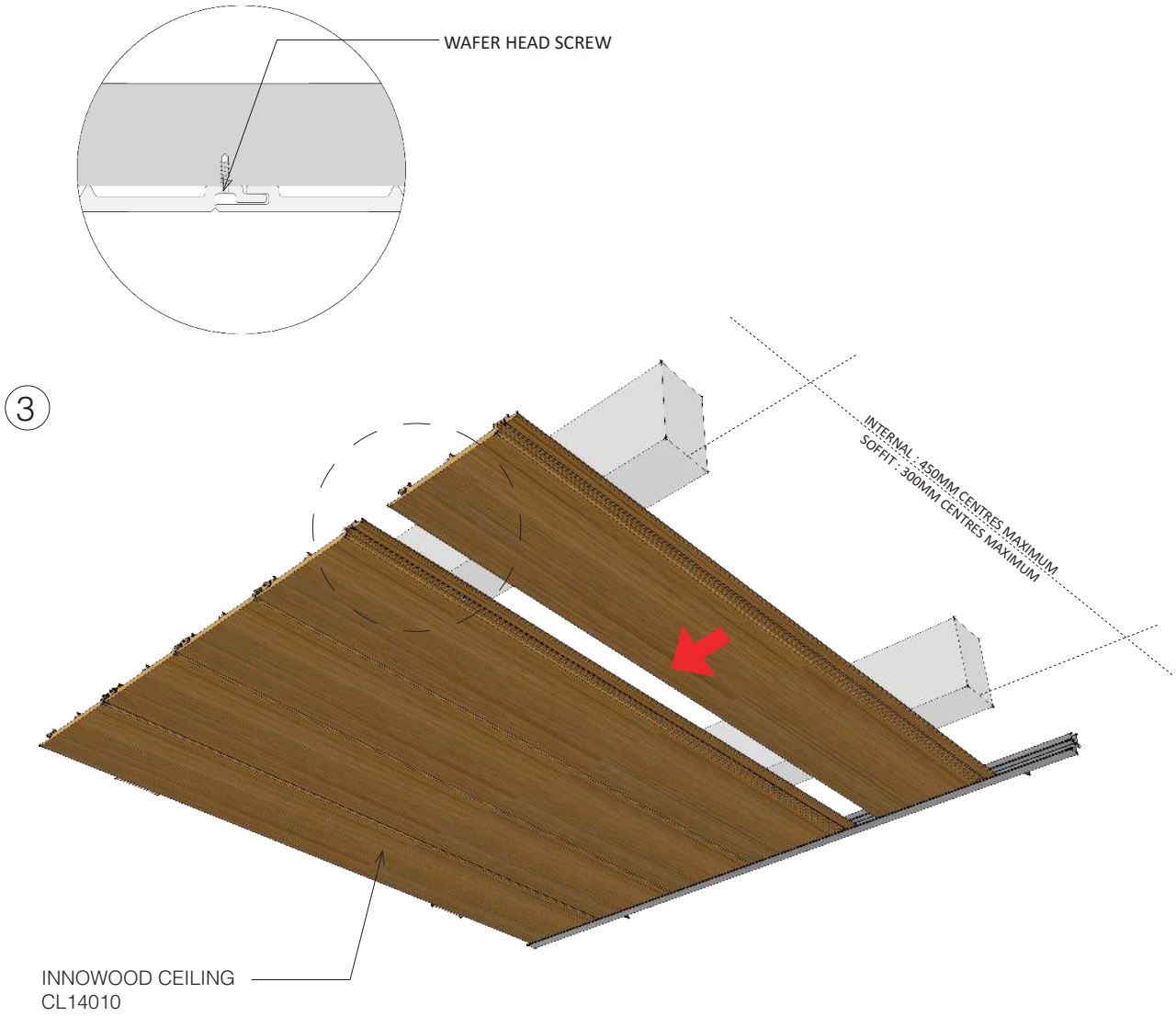


3. Position the second ceiling board into the groove of the first board and temporarily hold it in place. Use wafer head screw to screw fix the second board onto the back-structure.

3a. Repeat this step until the ceiling is fully installed. Use appropriate cornice to finish off if necessary.

## SLATTED FIXING

Please note that the following instruction is also applicable for CL06516/CL09028/CL10050/CL12530/CL15050

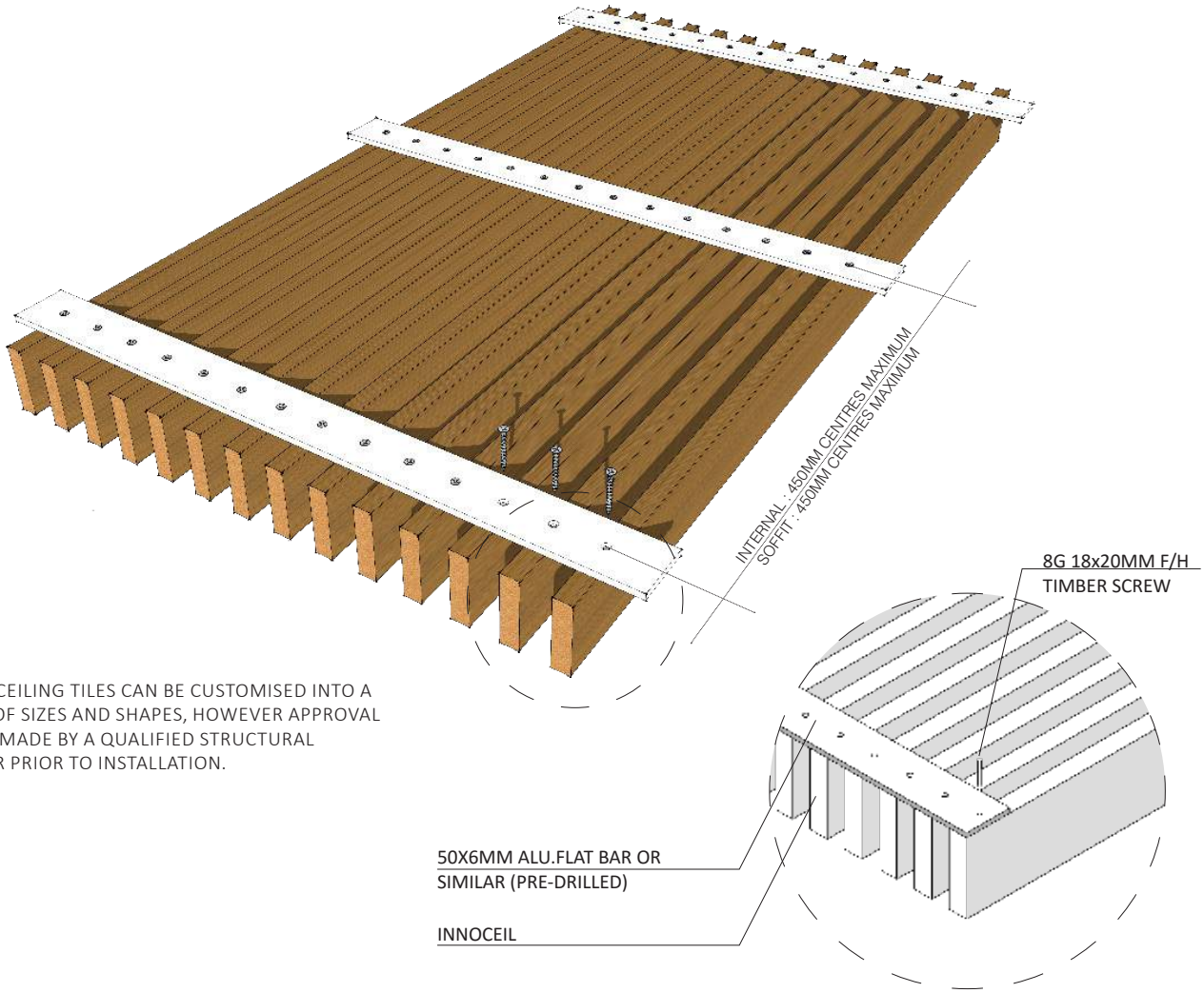


SLATTED CEILING TILES CAN BE CUSTOMISED INTO A VARIETY OF SIZES AND SHAPES, HOWEVER APPROVAL MUST BE MADE BY A QUALIFIED STRUCTURAL ENGINEER PRIOR TO INSTALLATION.

1. Use a proper tool to define the gap between each INNOCEIL batten.
   Screw fix the battens with flat-bar (or similar structural support) from the back.

NOTE

- Pre-drilling is essential.
- All screws are minimum 15mm but maximum 25mm away from board edges.

2

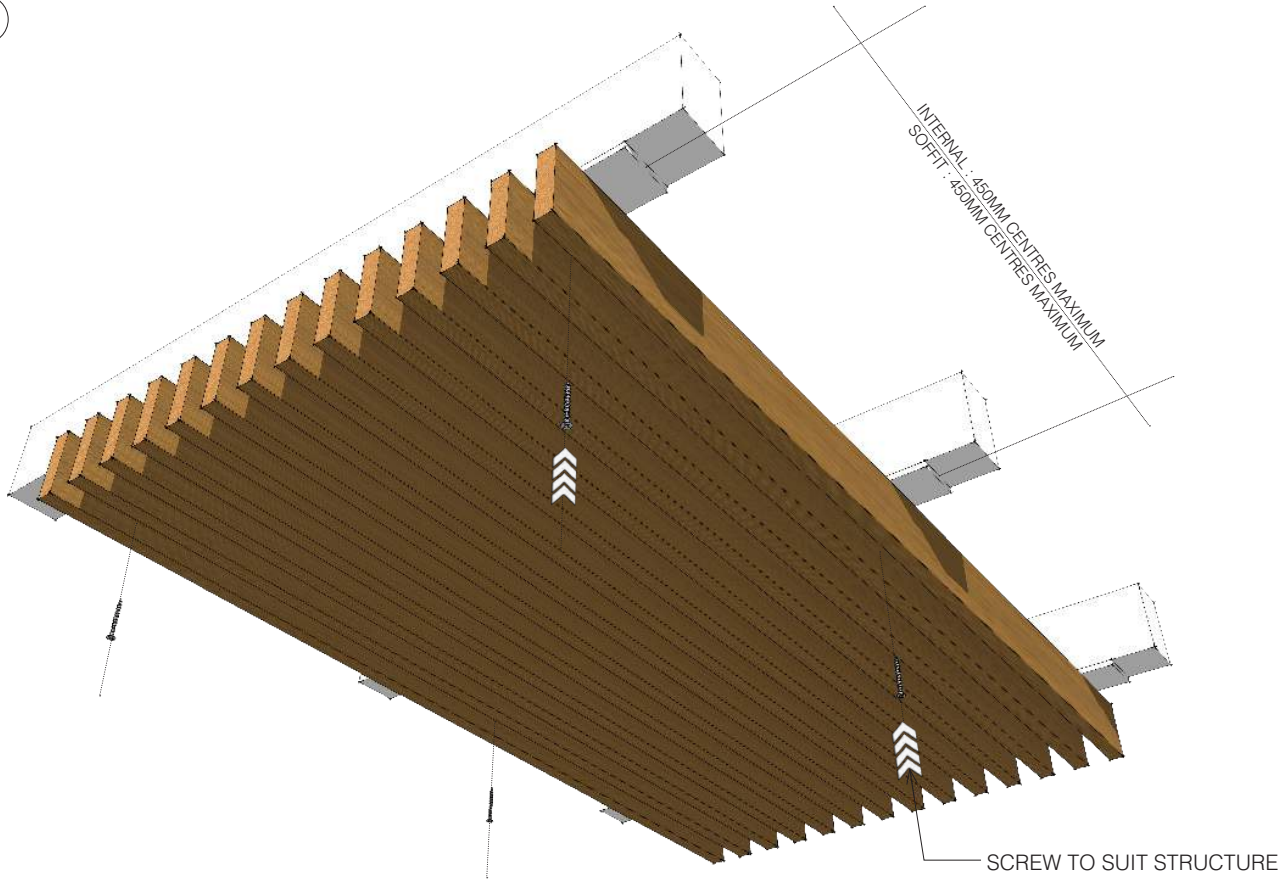


2. Temporarily hold the prepared panel in place and screw fix flat-bar/structural support onto the back structure through the gap between battens. Ensure the fixing span is no more than 450mm for both internal and soffit application.

NOTE

- Pre-drilling is essential.
- All screws are minimum 15mm but maximum 25mm away from board edges.

## SUSPENDED CLICK ON FIXING

Please note that the following instruction is also applicable for CL02050/CL03070.

.

### INSTALLATION PROCESS:

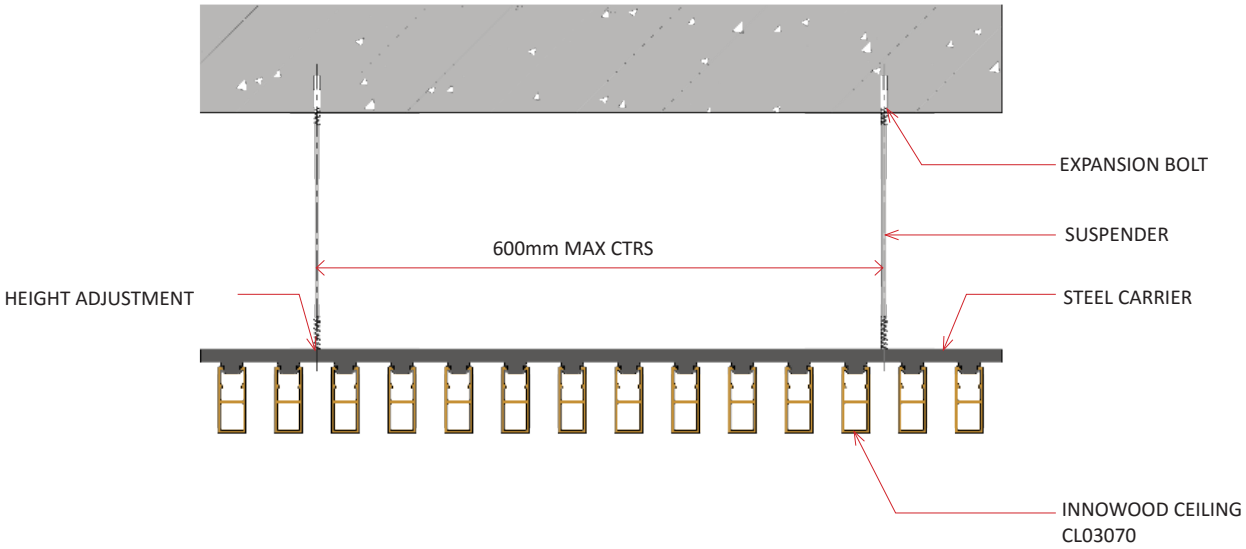


### END FINISHES:

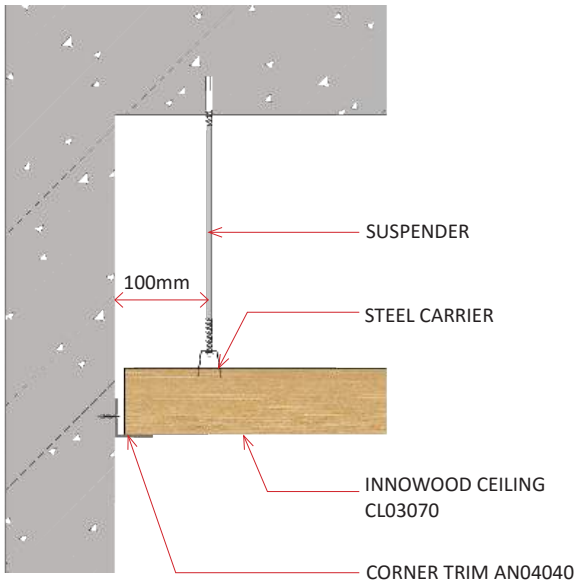


### AVAILABLE STEEL CARRIER:

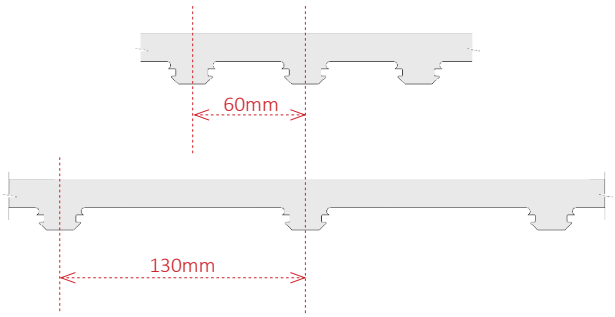

## SUSPENDED CLICK ON FIXING

Please note that the following instruction is also applicable for CL02050/CL03070.

1

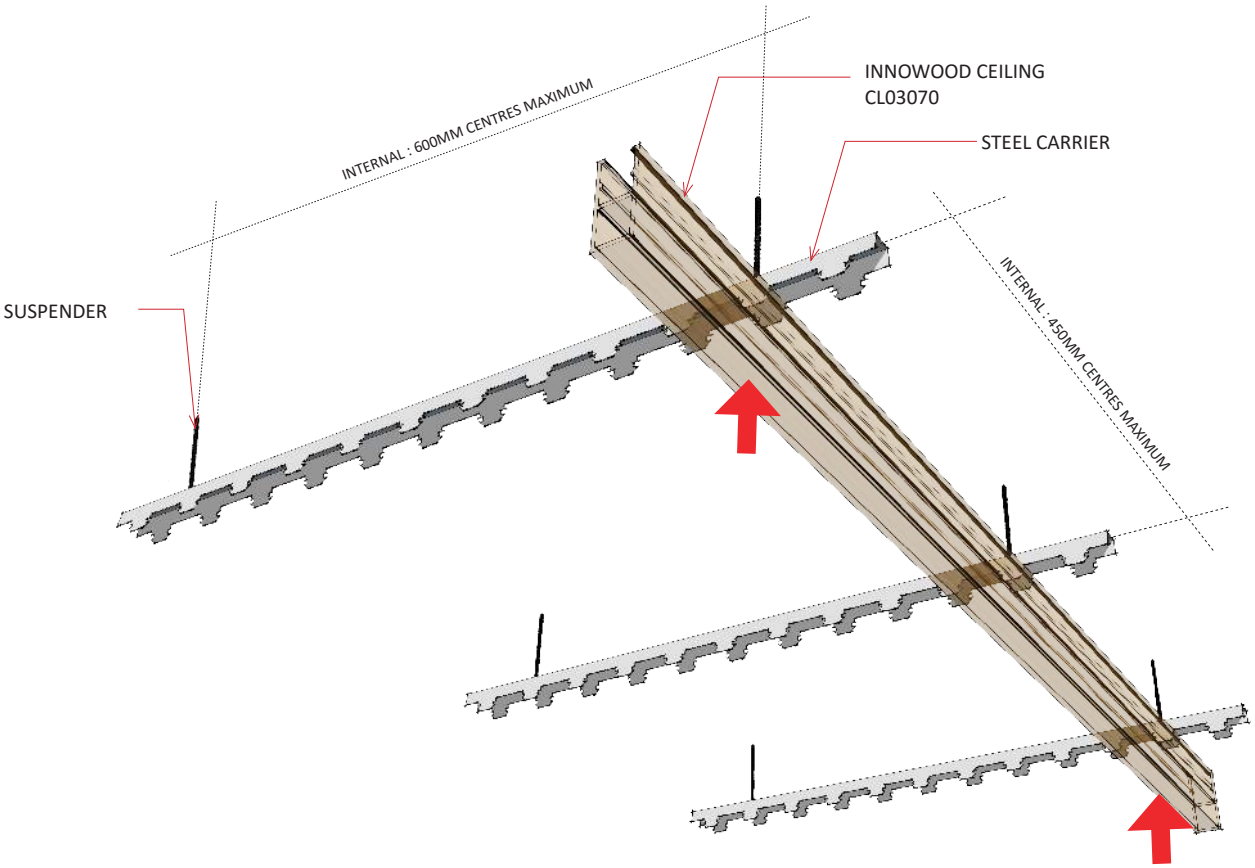


1. Set the height of the ceiling and install the corner trim if required.

2. Install the first row of steel carrier with a distance of 100mm away from the walls. The intervals between 2 rows of carrier are no more than 450mm.

3. Adjust the height of the steel carrier into the same level by adjusting the screws on the suspenders. The intervals between 2 suspenders are no more than 600mm.

4. More carriers or suspender sets will be required if there are cut outs or penetration for downlights, extractors or other electric ceiling products.

## SUSPENDED CLICK ON FIXING

Please note that the following instruction is also applicable for CL02050/CL03070.

2

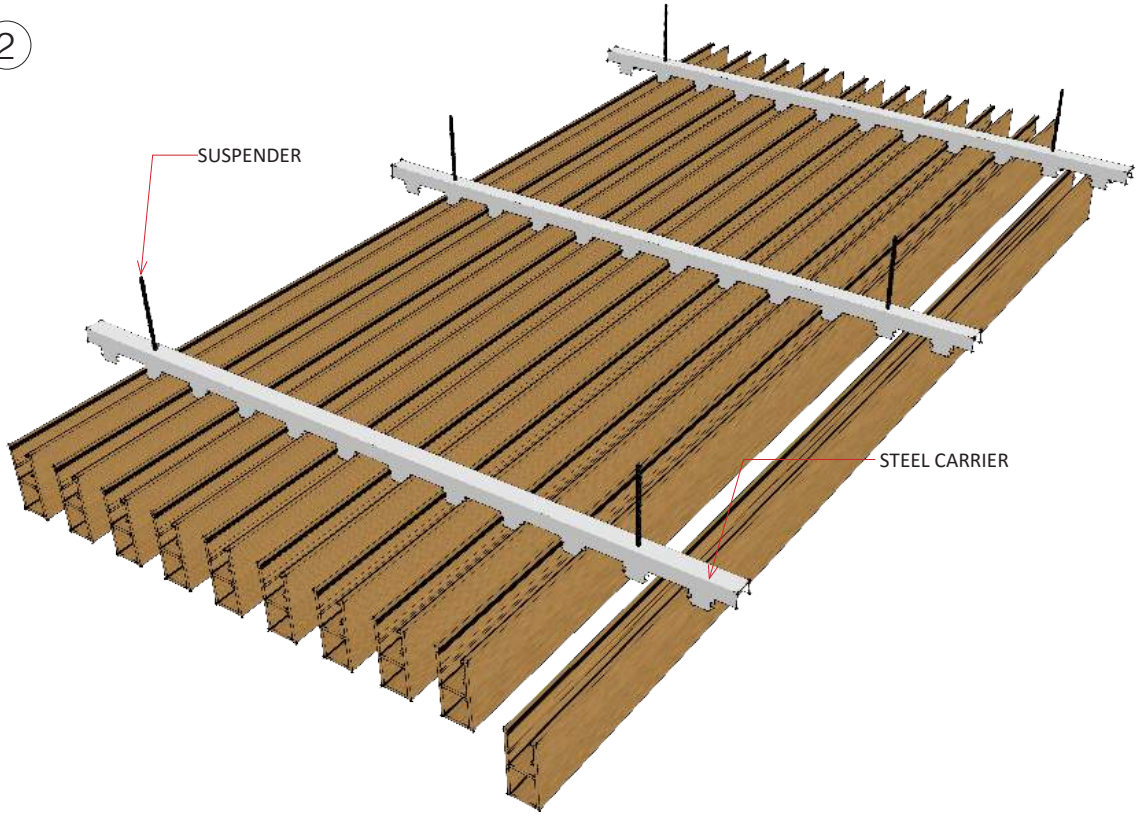


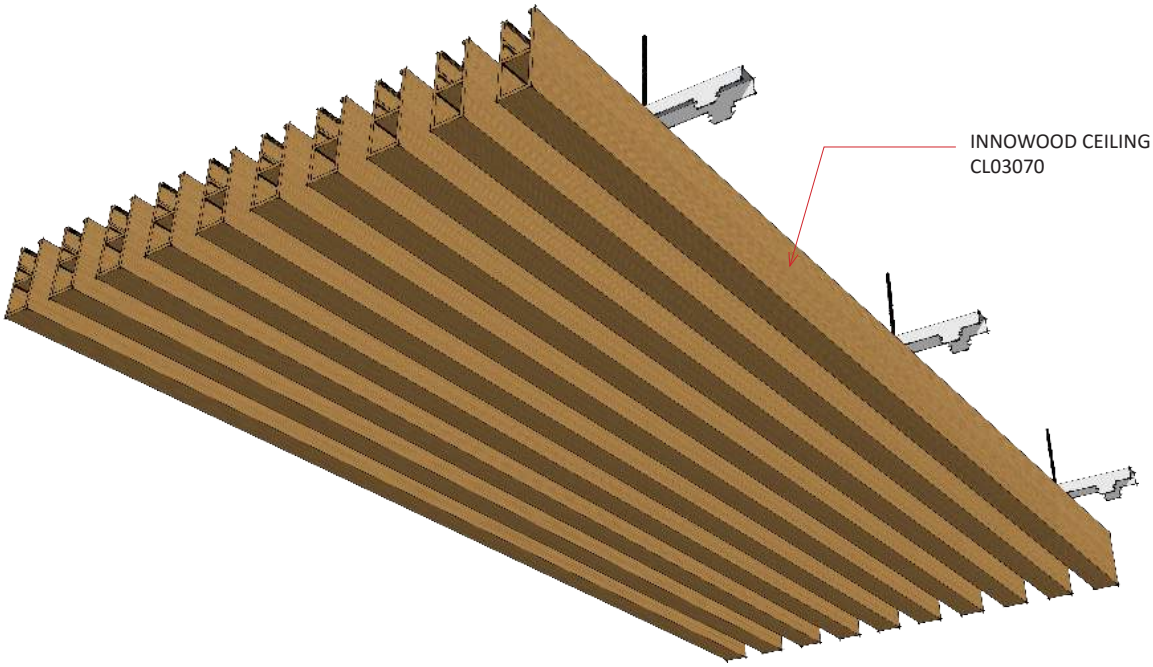

## END CAPS & EDGE TRIM

Instruction for closing off hollow INNOWOOD sections

The following is the epoxy method used to create a closed ended section.

### 1 END CAP OPTION

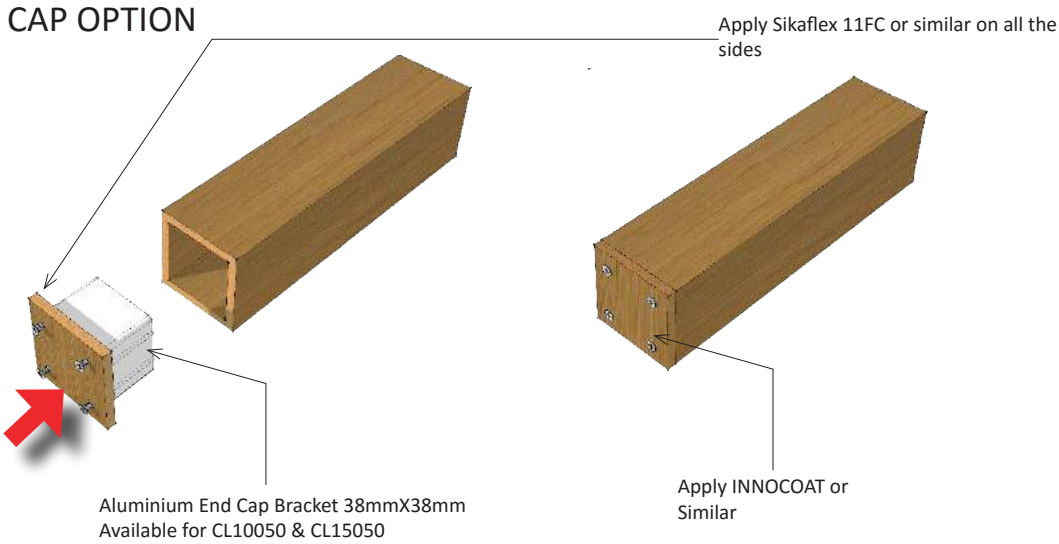


1. Ensure the end of the hollow profile is cleanly cut, dry and free from dust.
2. Screw fix the Endcap bracket 38mmX38mm box section on to the endcap cover piece as show in fig above.
3. Apply Sikaflex 11FC epoxy or similar to both mating surfaces, profile and cover piece.
4. Firmly press both surfaces together and wipe away any excess epoxy.
5. Continue to apply pressure until the cover piece is firmly in place.
6. If the cover piece requires slight shaping, carefully sand the square corners as required.
7. Ensure the 4 sides of the cover piece are clean, dry and free from dust.
8. Then carefully apply InnoCoat to the uncoated sides of the cover piece.
9. For other hollow profiles like CL09028 and CL12530, glue fix end cap option is avilable.

### 2 EDGE TRIM OPTIONS

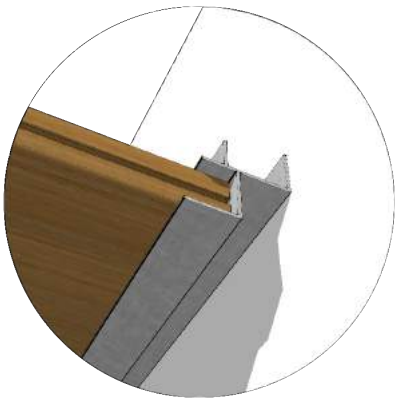

Option of Aluminium Edge Trim

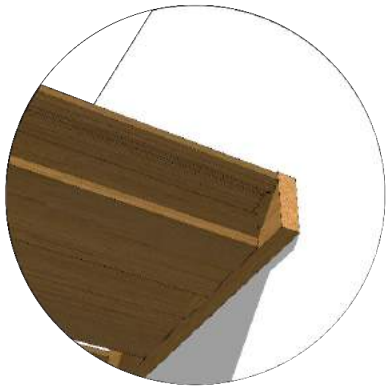

Option of Timber Batten Trim

# NOTES

INNOWOOD

SUSTAINABLE TIMBER ALTERNATIVE

FOR MORE INFORMATION, PLEASE VISIT INNOWOOD AT

WWW.INNOWOOD.COM

OR CALL 1300 787 717